TEAR SHEET

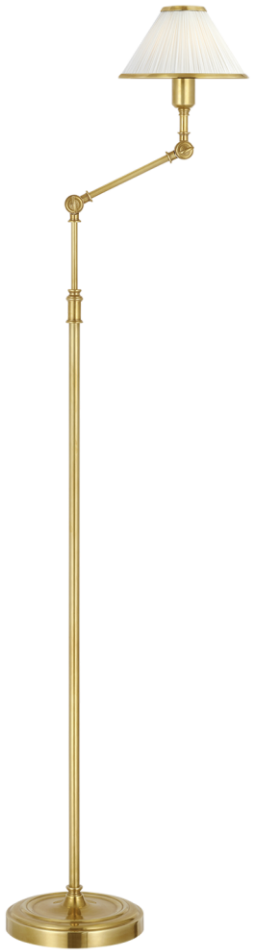

Anette Floor Lamp

Item # RL 1250NB-SP

Designer: Ralph Lauren

Height: 46" - 58.5"
Width: 8"
Extension: 7.25" - 14.75"
Base: 8" Round
Finishes: NB, PN
Shade Treatments: NB, PN, SP
Shade Details: 2.25" x 7.25" x 4.75"
Socket: E12 Candelabra w/ Foot Switch
Wattage: 40 B11
Weight: 14 Pounds

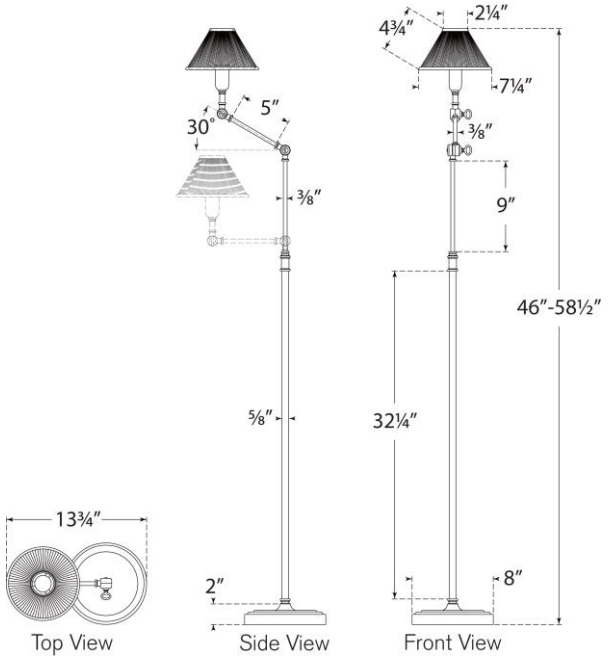

VISUAL COMFORT & CO.