ASSEMBLY INSTRUCTION

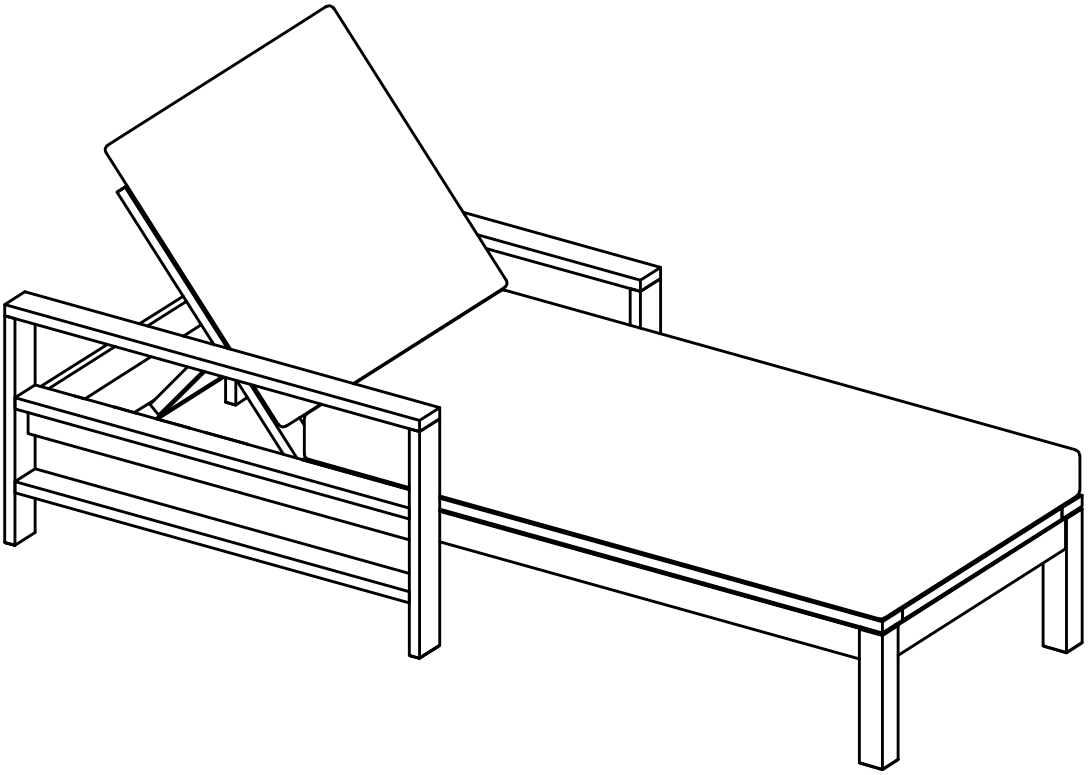

Thank you for purchasing this quality product. Be sure to check all packing material carefully for small parts which may have come loose inside the carton during shipment. Separate, identify and count all parts and hardwave. Compare with the parts list to be sure all parts are present.
"DO NOT TIGHTEN SCREWS UNTIL COMPLETELY ASSEMBLED″

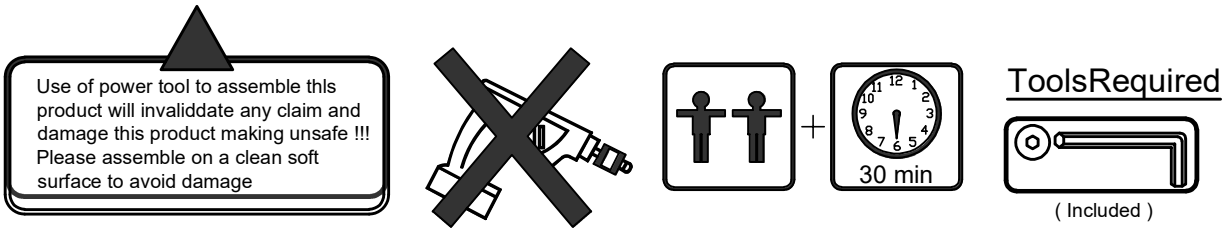

IMPORTANT:

PLEASE READ INSTRCTION BEFORE STARTING THE ASSEMPLY

PLEASE DO NOT RETURN TO STORE

Please do not return this product to the retailer!!
We are able to assist you in ANY way

If you find that you have any trouble with assembly or missing or damaged parts please contact the seller.

Before Installation

Important – Please read these instructions fully before starting assembly

Thank you for purchasing this quality product. Be sure to check all packing materials carefully for small parts, which may have come loose inside the carton during shipment. Identify and count all items according to the PARTS LIST and/or HARDWARE LIST shown below. Check you have all the components and tools listed on the following pages.

- We recommend that you assemble this product with the assistance of another person; this will make the assembly easier, and will help eliminate damage to the product or injury to persons during assembly.
- Please do not over tighten screws or bolts until the assembly is completed.
- Keep children and animal away from the work area, small parts could choke if swallowed.
- Please put all parts on a non-abrasive floor before assembly,and follow the assembly steps to assemble your newly purchased product correctly and efficently.

DETAIL VIEW - OUTDOOR CHAISE LOUNGE

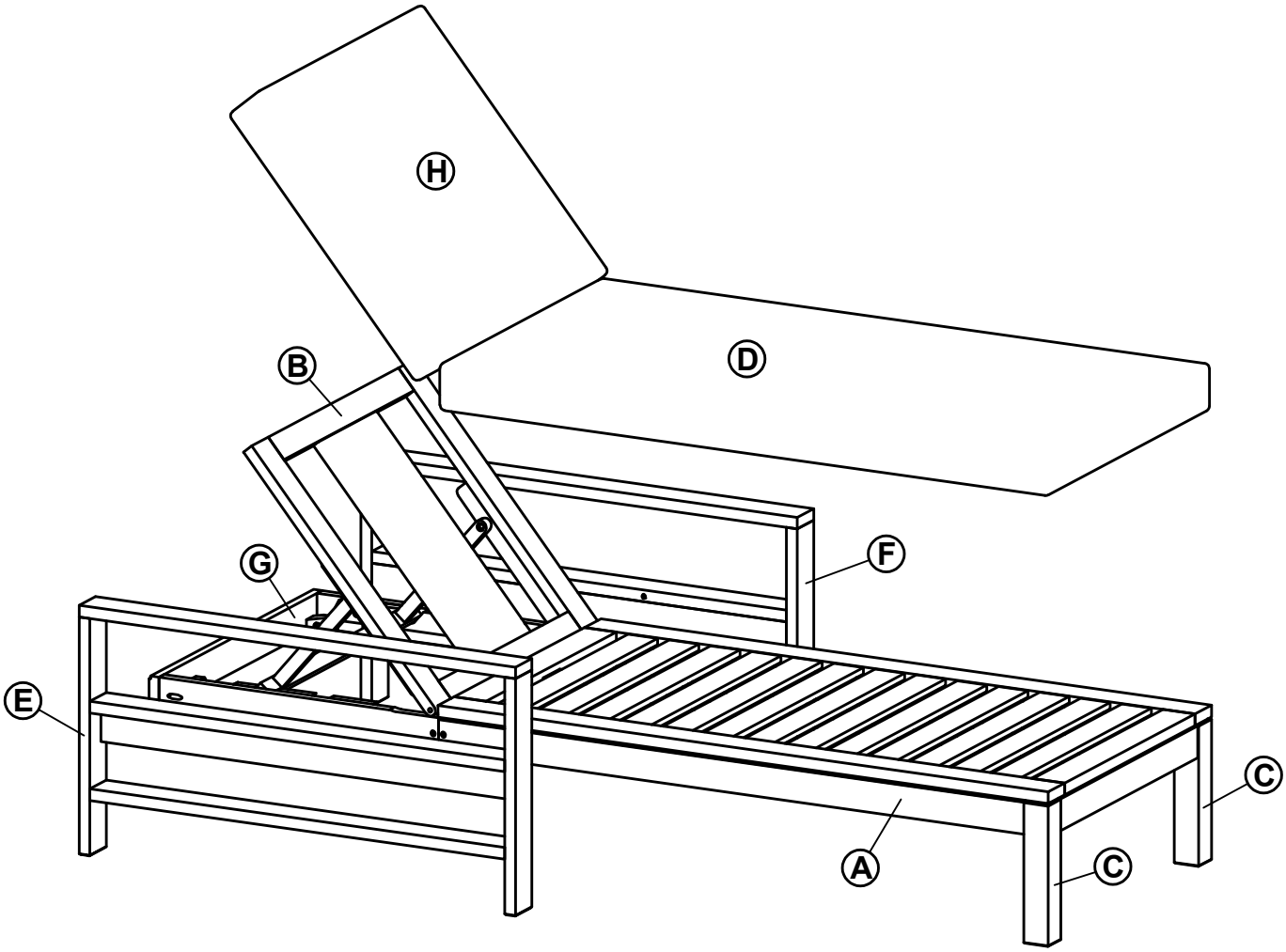

Identifying the Hardware - Indentify the hardware using the illustrations below.

PART LIST

A 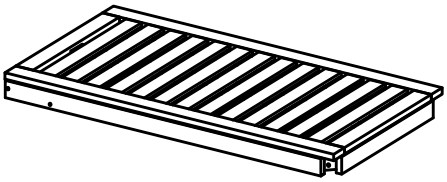 1 PC	B 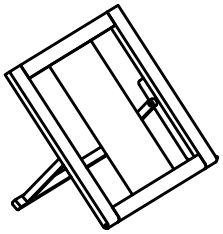 1 PC
C 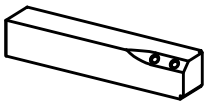 2 PCS	D 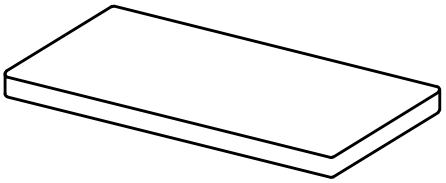 1 PC

PART LIST

E 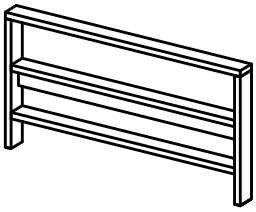 1 PC	F 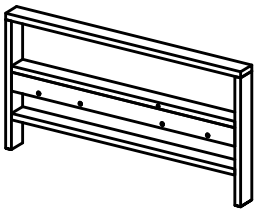 1 PC
G 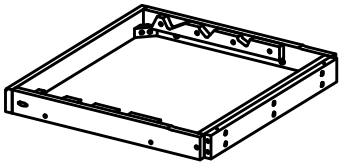 1 PC	H 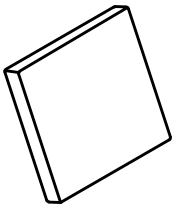 1 PC

HARDWARE

1. BOLT M6 x 60 mm 4 PCS	2. BOLT 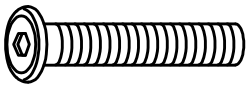 M6 x 35 mm 14 PCS	
3. SPRING WASHER Ø6 x 11 mm 18 PCS	4. FLAT WASHER 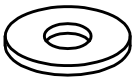 Ø6 x 18 mm 4 PCS	
5. FLAT WASHER Ø6 x 13 mm 14 PCS	6. DOWEL 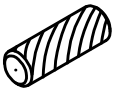 Ø10 x 30 mm 6 PCS	7. ALLEN KEY 4 x 60 mm 1 PC

STEP 1

1	3	4	7
4PCS	4PCS	4PCS	1PC

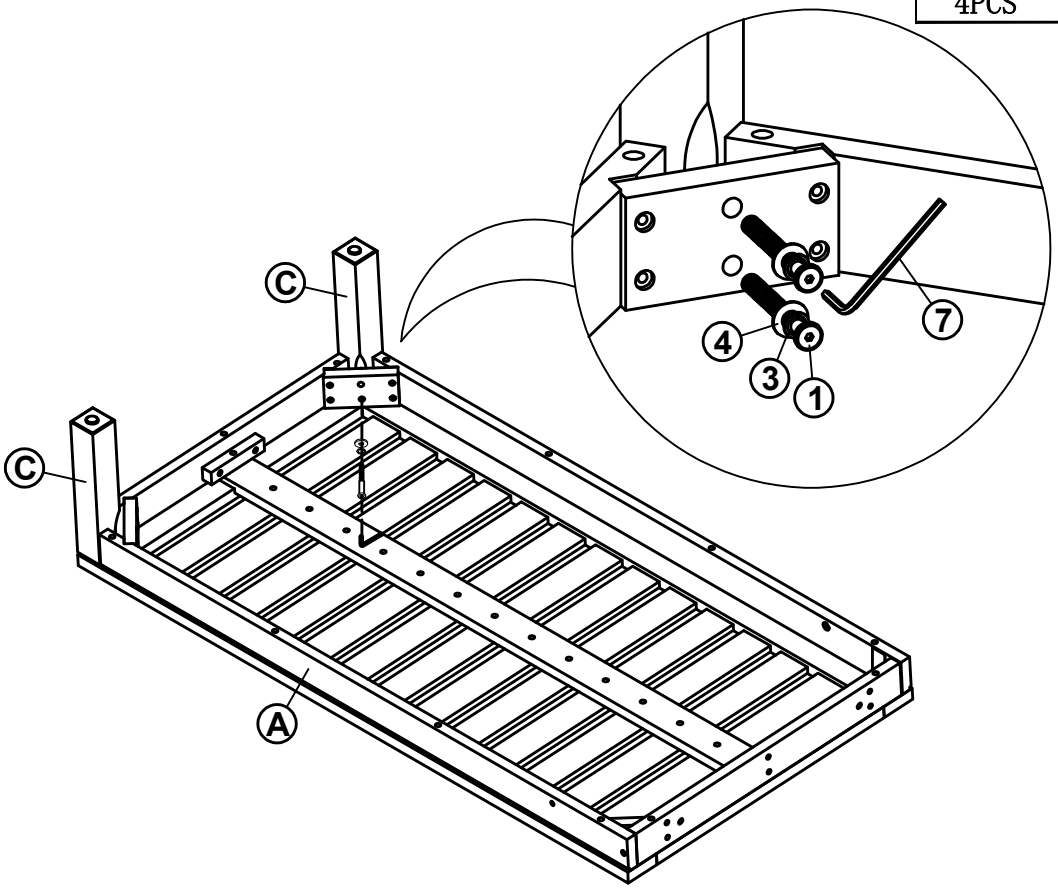

STEP 2

2	3	5	6	7
6PCS	6PCS	6PCS	2PCS	1PC

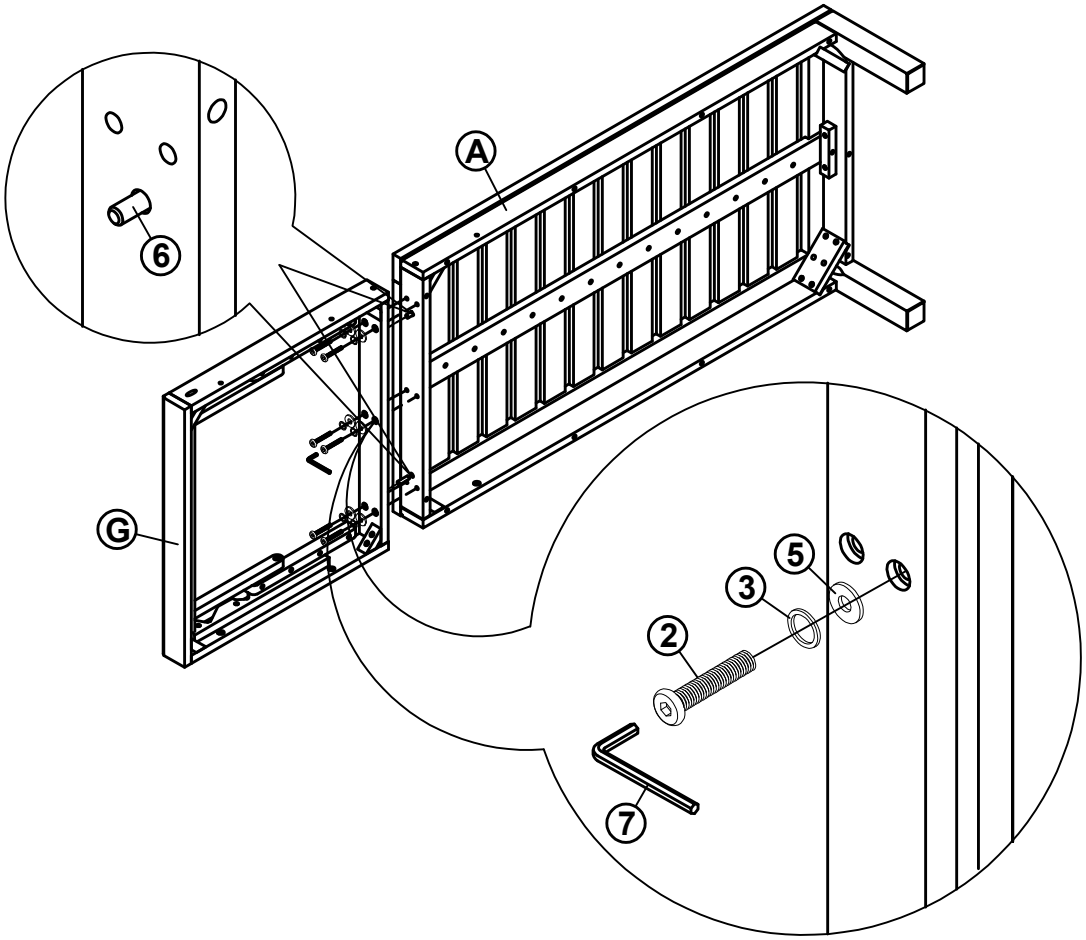

STEP 3

2	3	5	6	7
4PCS	4PCS	4PCS	2PCS	1PC

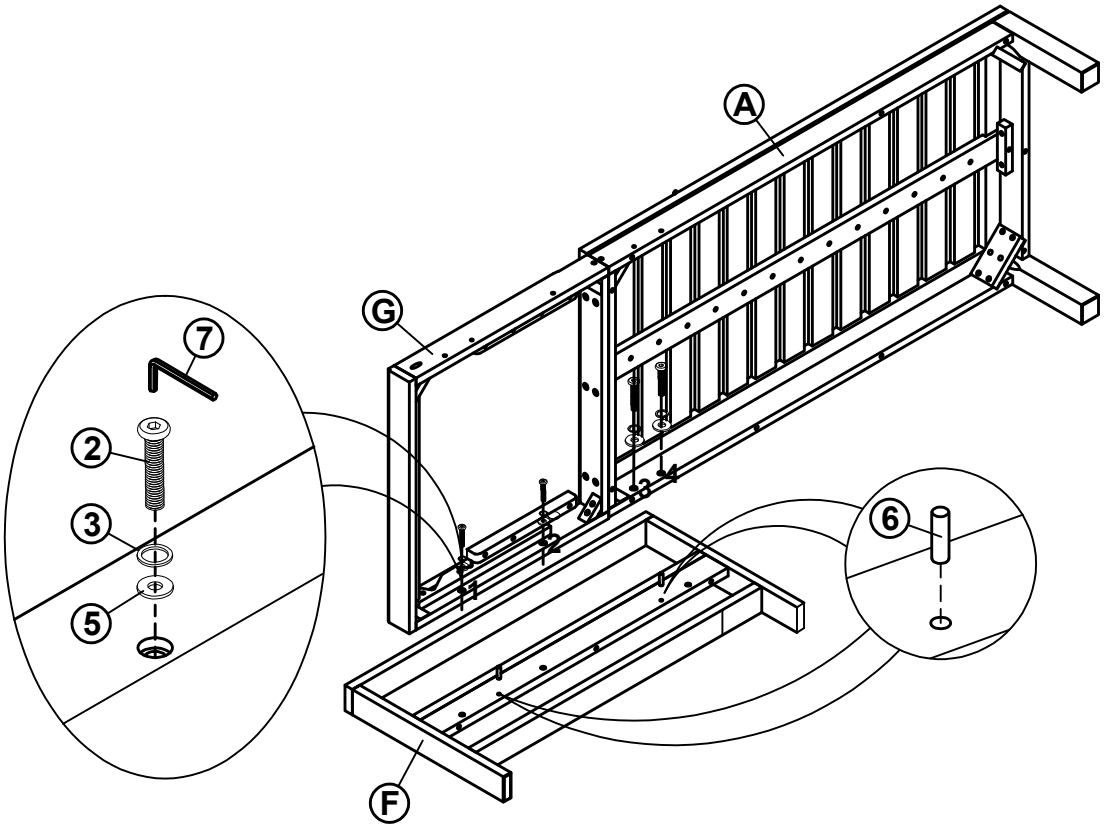

STEP 4

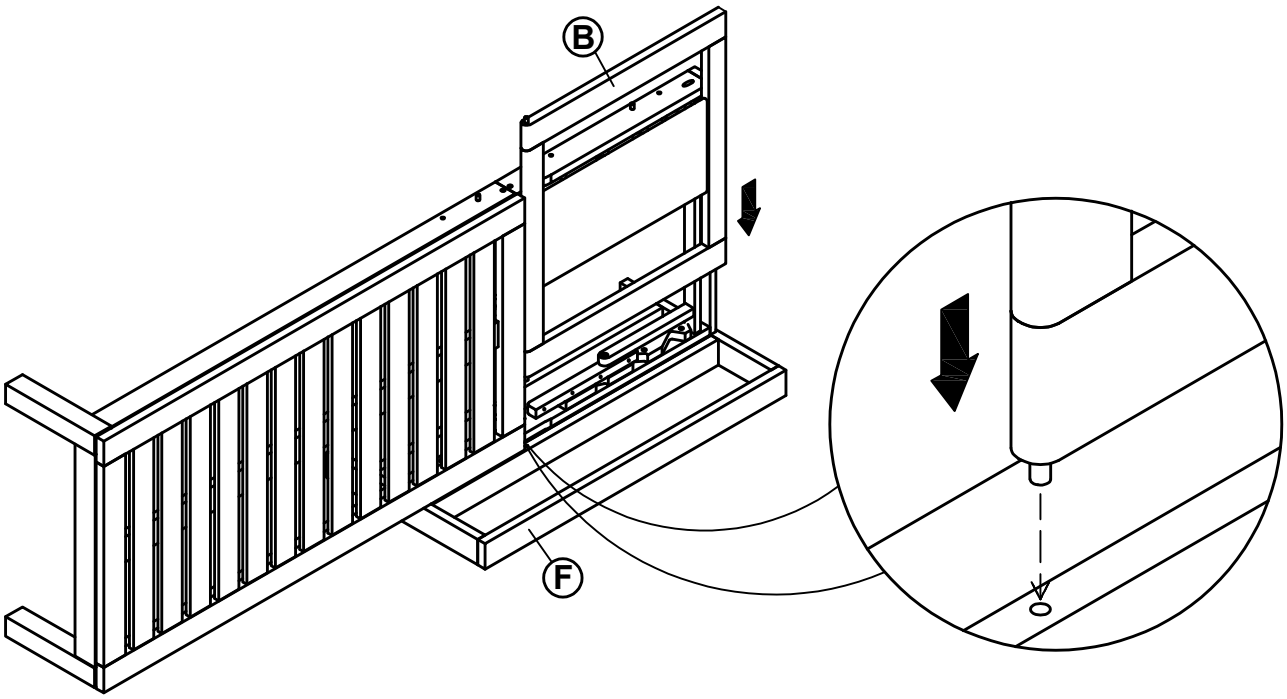

STEP 5

6
02PCS

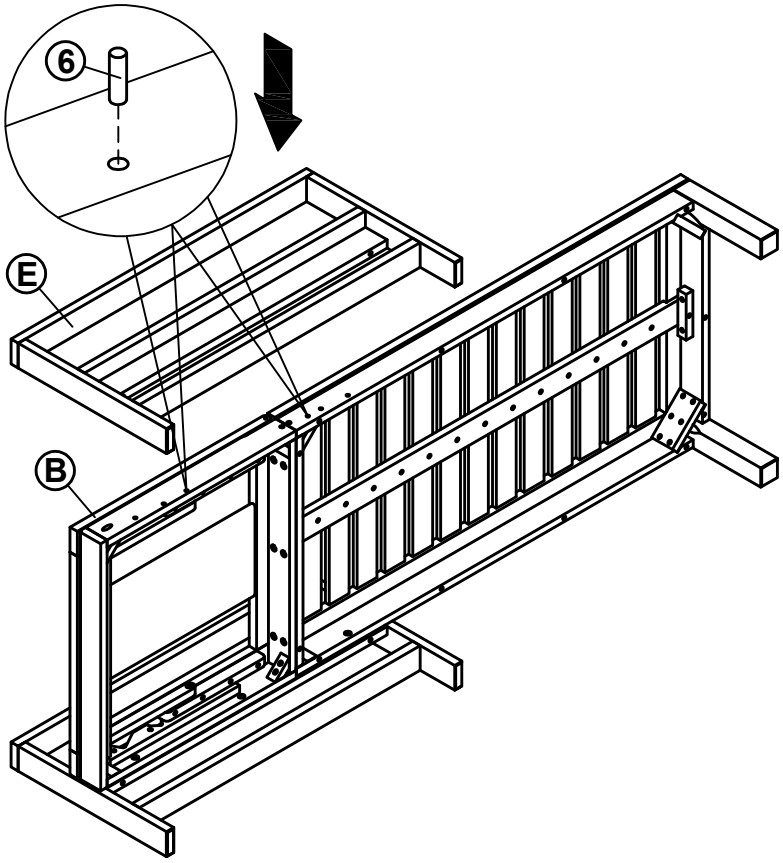

STEP 6

2	3	5	7
4PCS	4PCS	4PCS	1PC

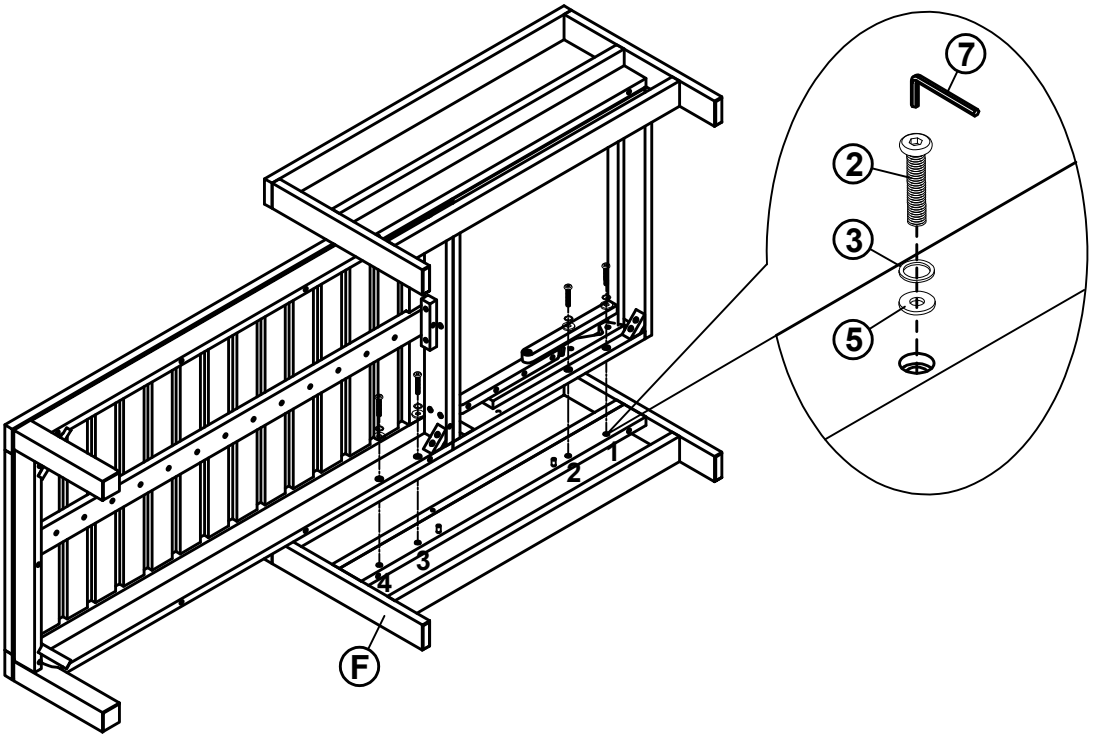
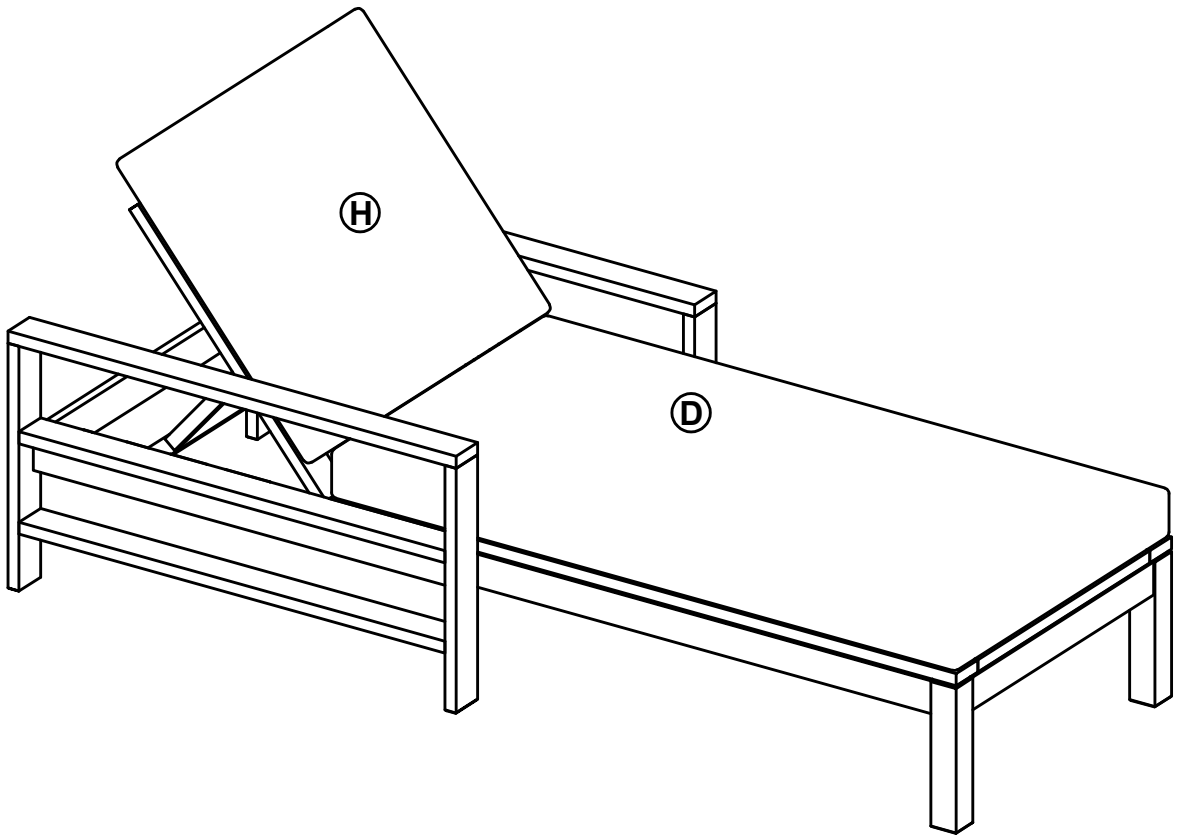
STEP 7