ASSEMBLY INSTRUCTIONS
BATHROOM VANITY

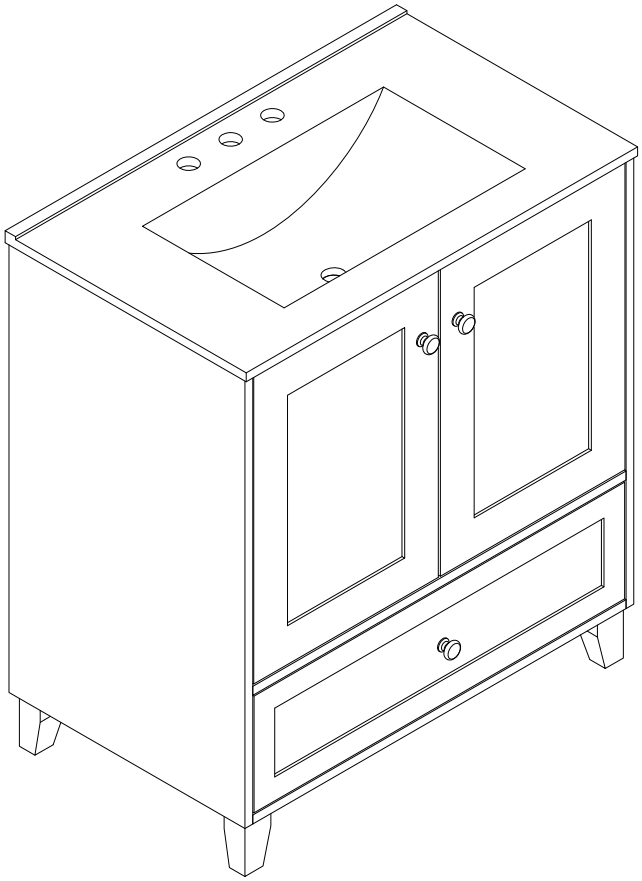

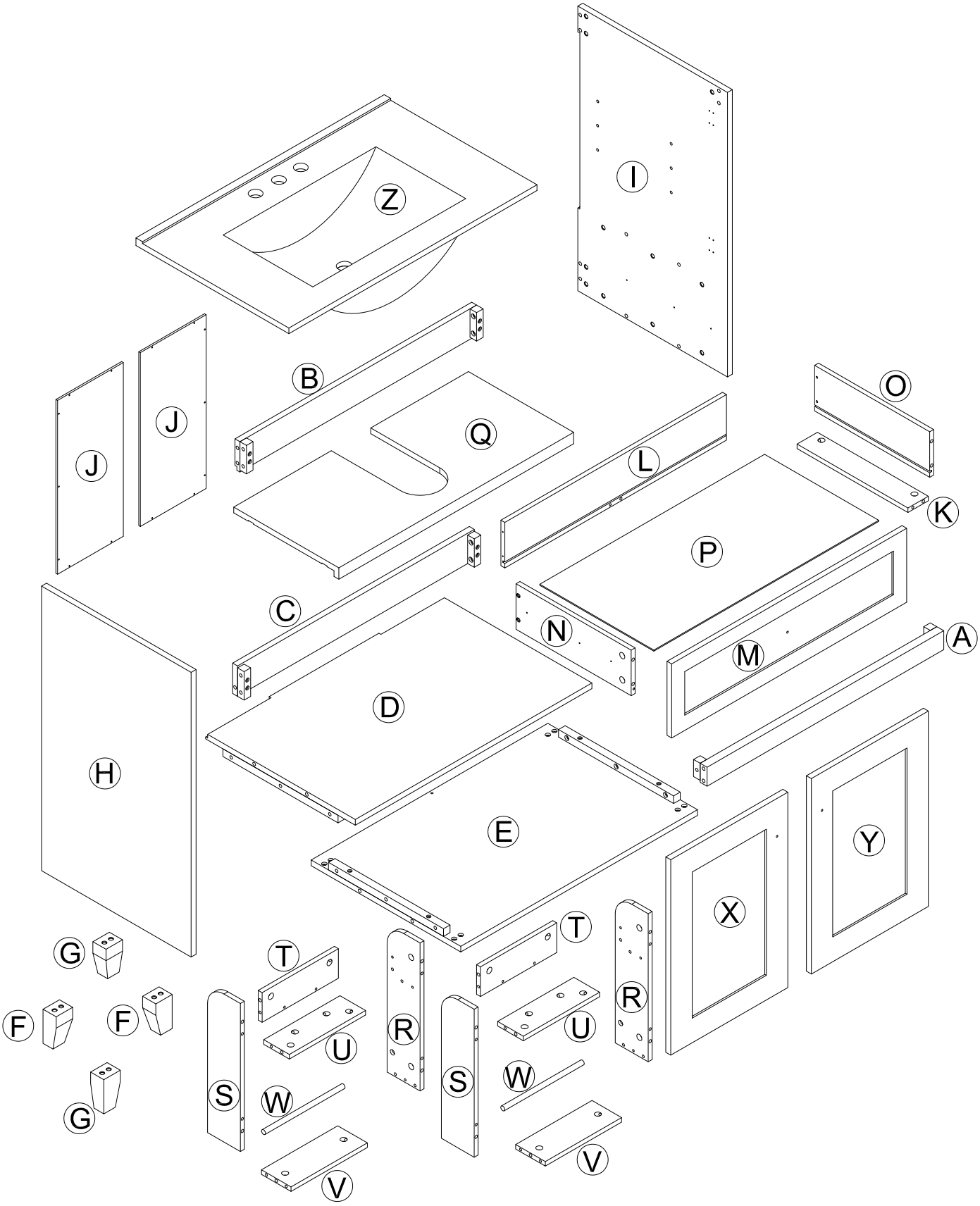
Z
I
B
J
J
Q
O
L
K
P
C
N
M
A
D
H
E
Y
X
T
G
T
R
R
F
F
U
U
S
S
W
W
G
V
V

PRODUCT PARTS:

A	B	C	D	E	F
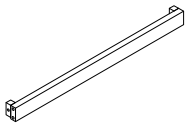	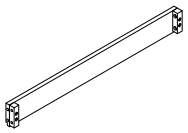	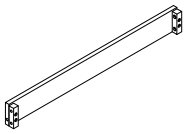	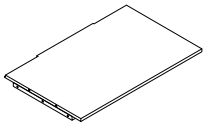	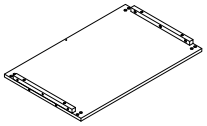	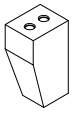
1PC	1PC	1PC	1PC	1PC	2PCS
G	H	I	J	K	L
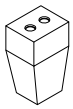	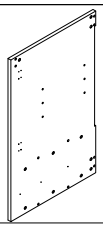	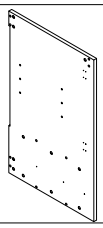	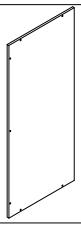	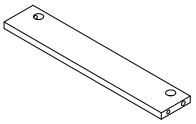	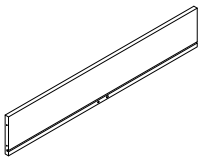
2PCS	1PC	1PC	2PCS	1PC	1PC
M	N	O	P	Q	R
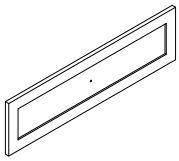	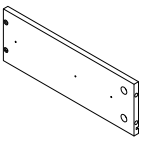	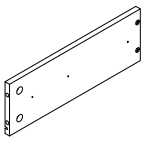	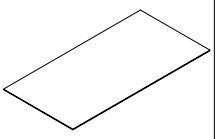	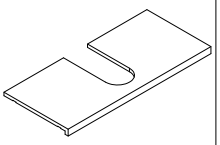	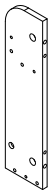
1PC	1PC	1PC	1PC	1PC	2PCS
S	T	U	V	W	X
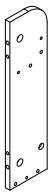	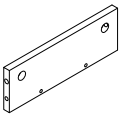	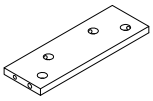	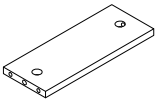	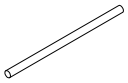	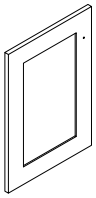
2PCS	2PCS	2PCS	2PCS	2PCS	1PC
Y	Z				
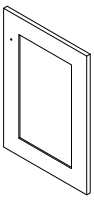	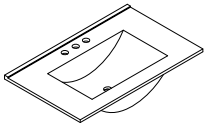				
1PC	1PC				

HARDWARE:

①	②	③	④	⑤	⑥
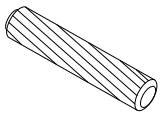 Ø8x30mm	1/4"x40mm	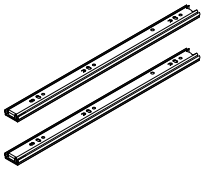 14"x35mm	Ø3x10mm	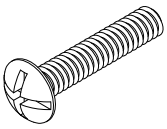 1/4"x25mm	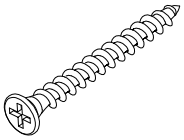 Ø4x35mm
20+2 PCS	8 PCS	1 SET	12+1 PCS	22+2 PCS	1 PC
⑦	⑧	⑨	⑩	⑪	⑫
Ø3x12mm	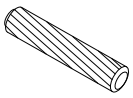 Ø6x30mm	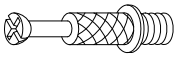 Ø6x33mm	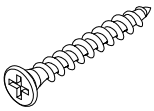 Ø4x25mm	Ø15x9mm	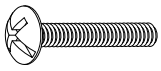 5/32"x18mm
14+2PCS	26+2PCS	30+2PCS	4PCS	30+2PCS	3PCS
⑬	⑭	⑮	⑯		
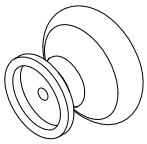		Ø4x12mm	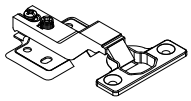		
3PCS	4PCS	24+2PCS	4PCS		

STEP 1

1 4pcs
Ø8x30mm

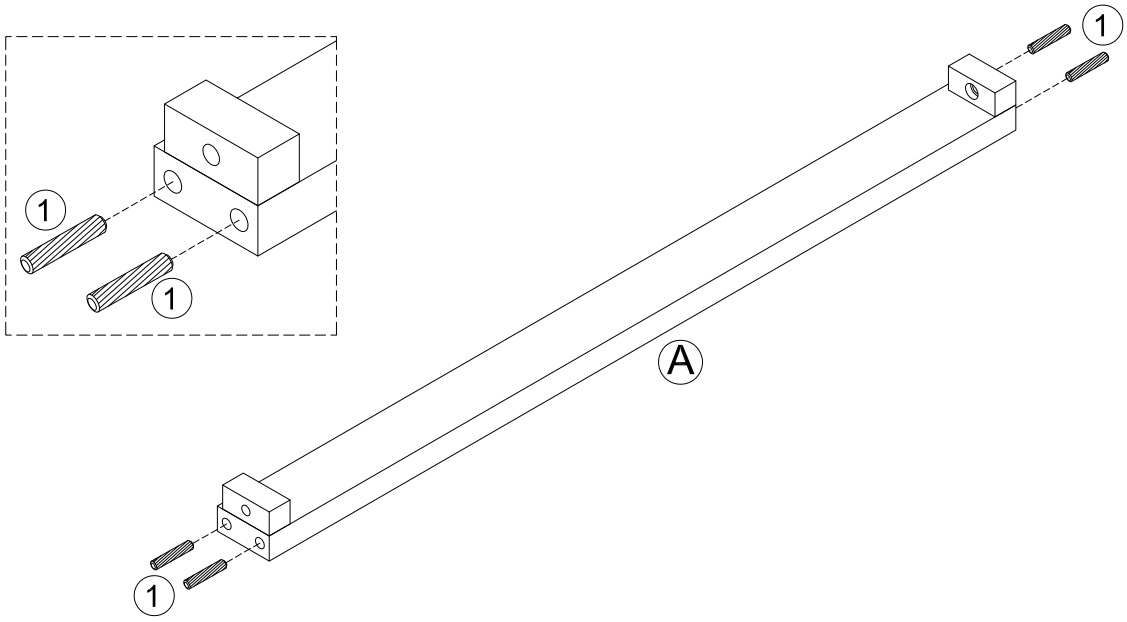

STEP 2

1 4pcs
Ø8x30mm

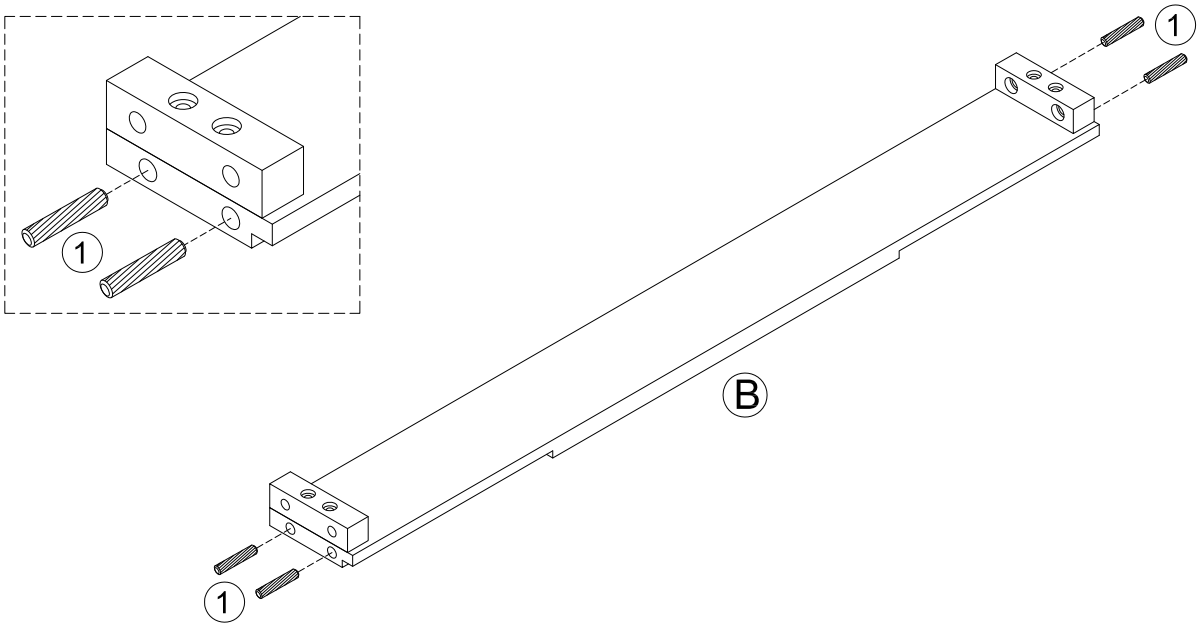

STEP 3

1 4pcs
Ø8x30mm

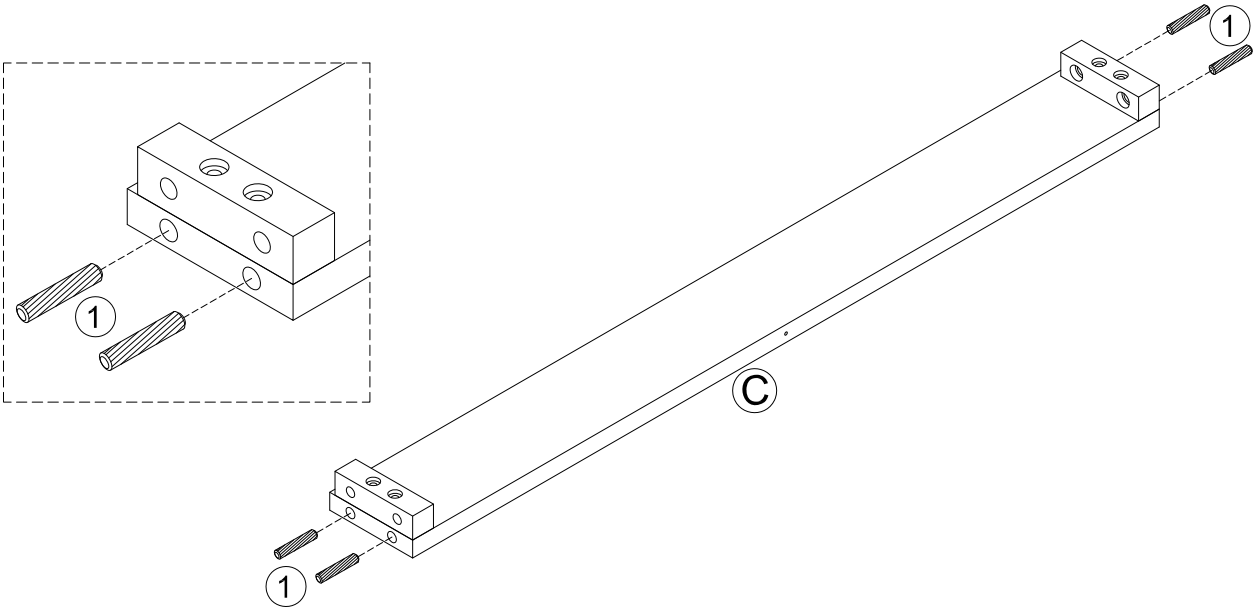

STEP 4

1 4pcs
Ø8x30mm

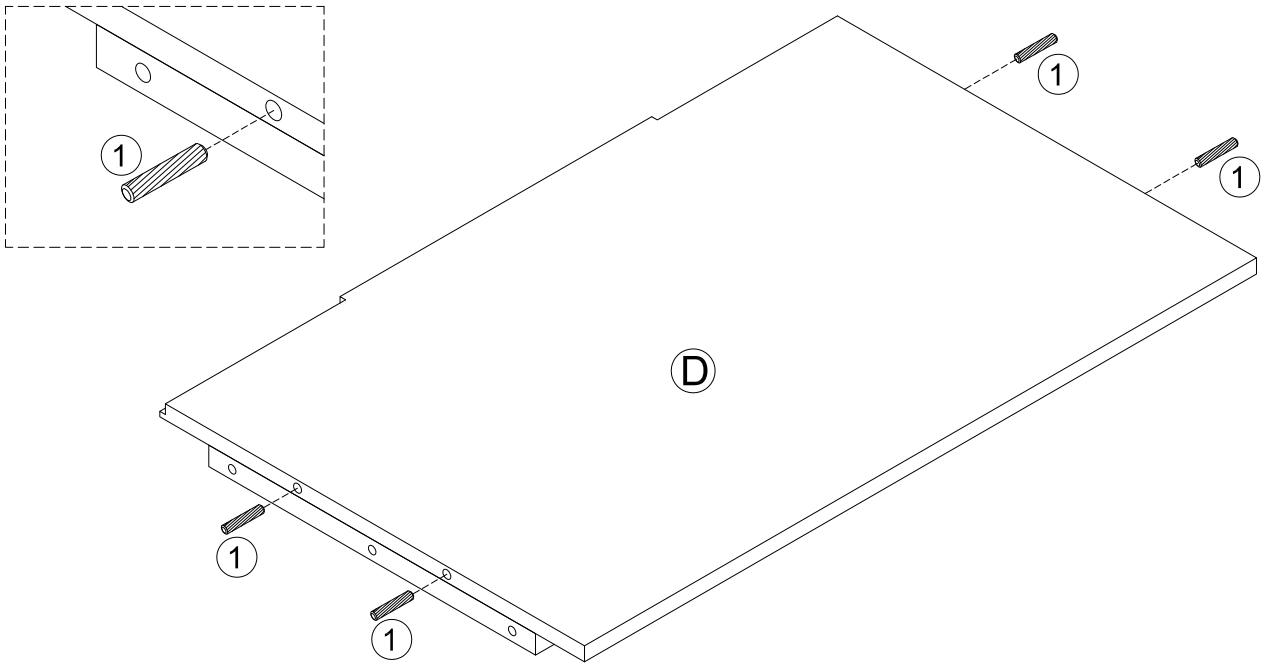

STEP 5

1 4pcs
Ø8x30mm

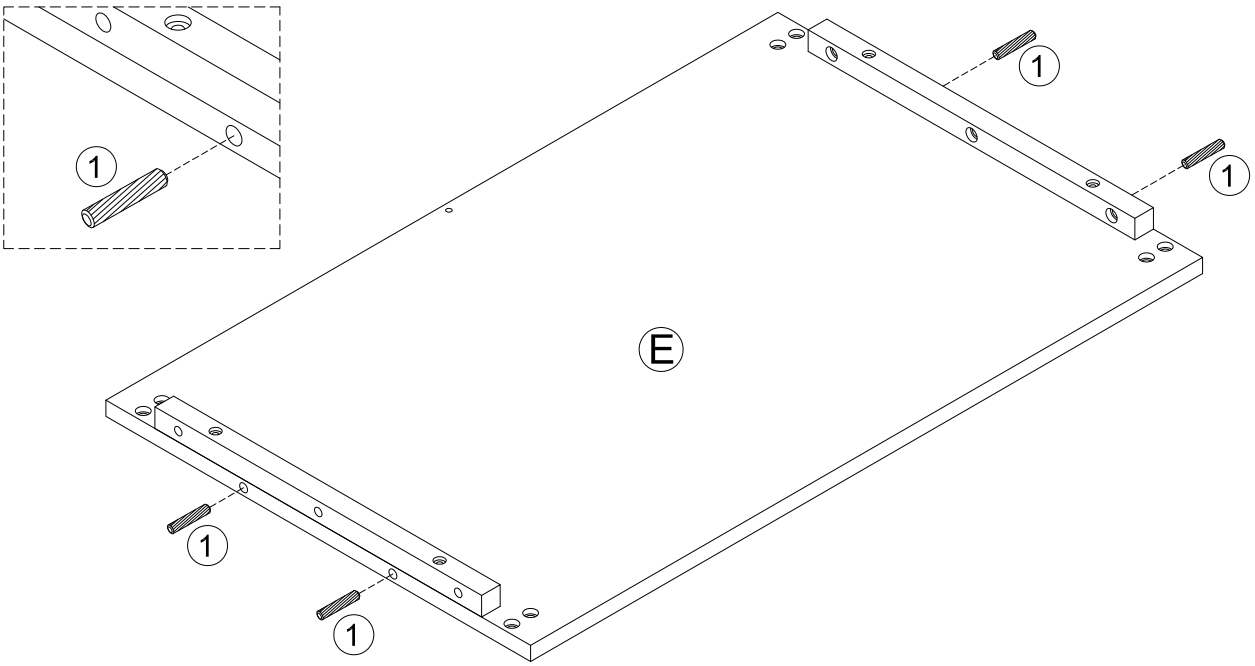

STEP 6

2 8pcs
1/4"x40mm

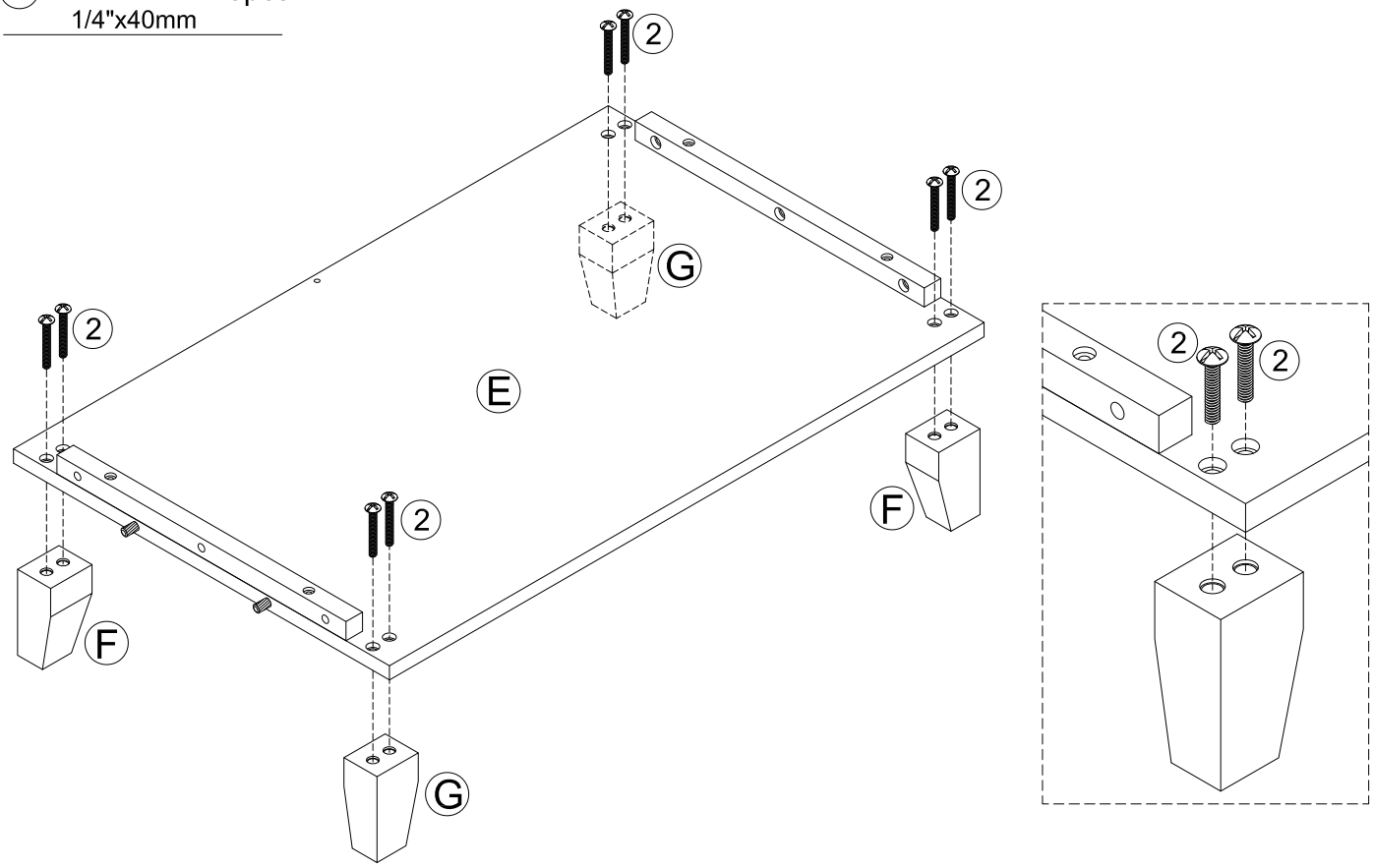

STEP 7

③ 1SET
14"x35mm

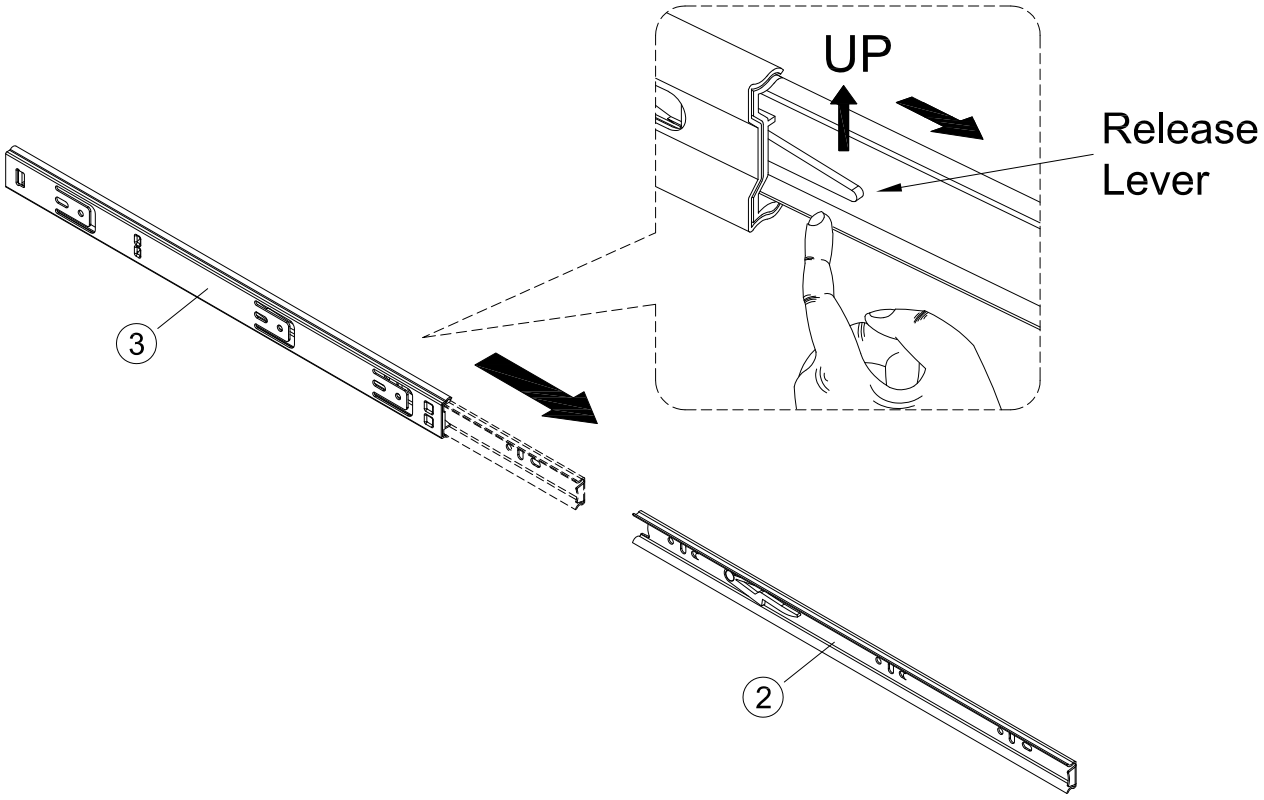

STEP 8

④ Ø3x10mm 3pcs

③ 14"x35mm 1pc

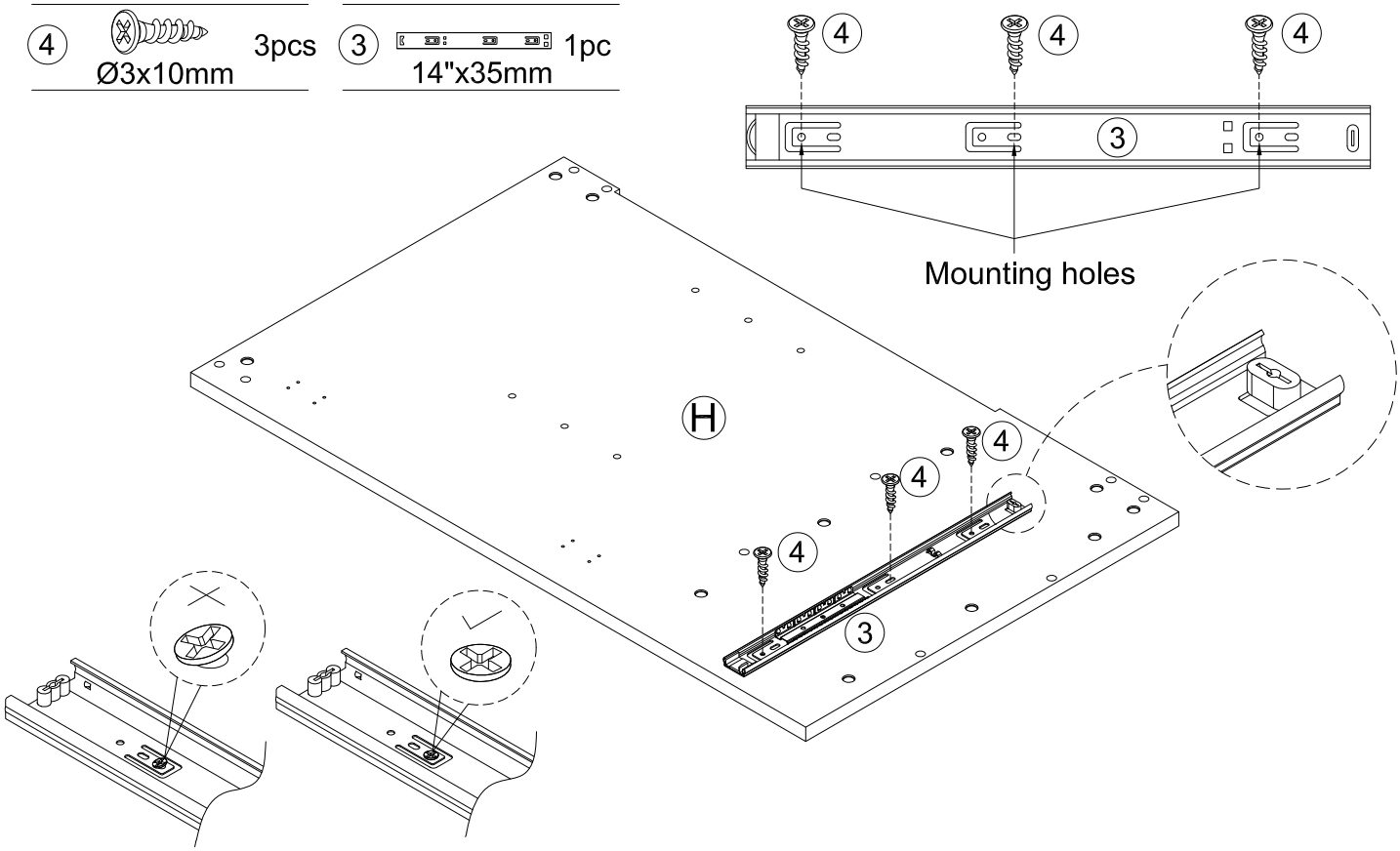

Please make sure that the screw is VERTICAL
so as not to affect the sliding of the drawer.

STEP 9

4	Ø3x10mm	3pcs	3	14"x35mm 1pc

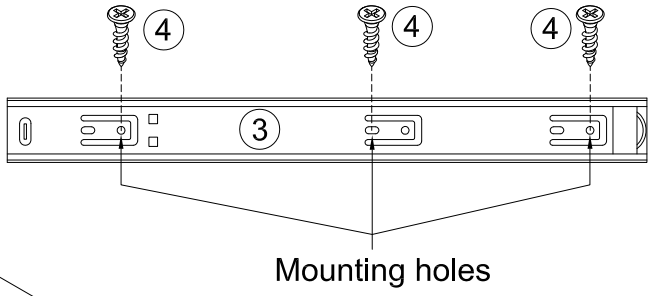

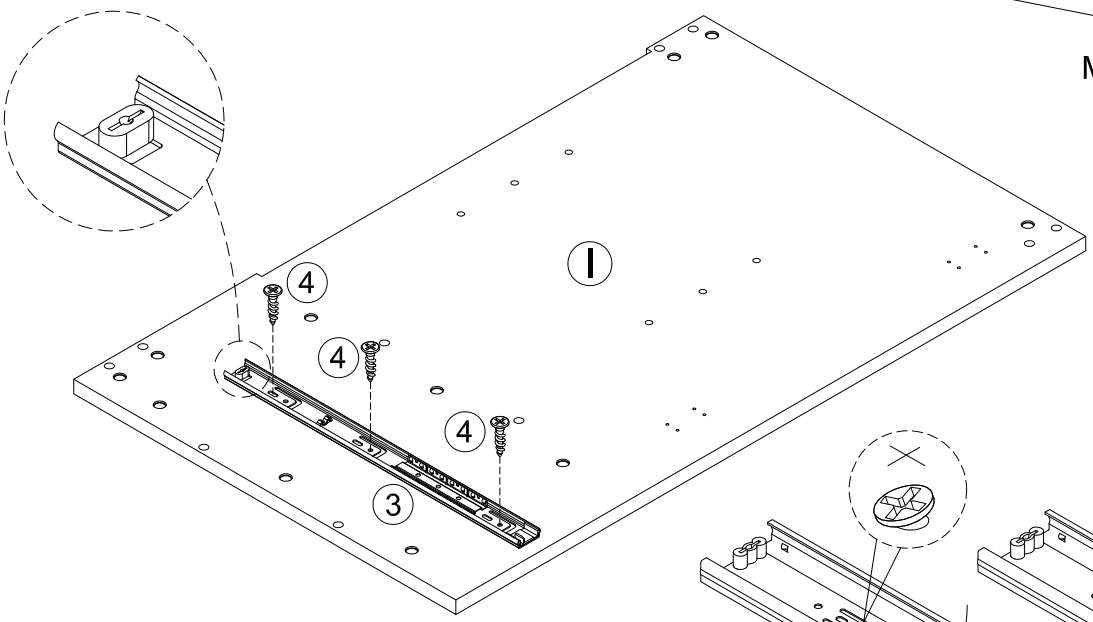

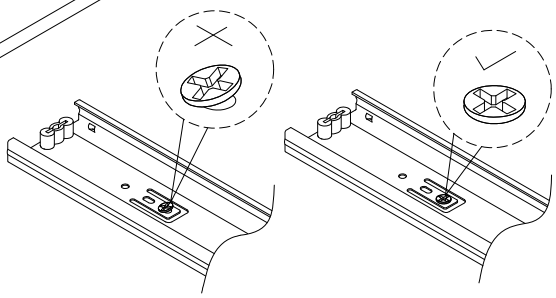

Please make sure that the screw is VERTICAL so as not to affect the sliding of the drawer.

STEP 10

5	1/4"x25mm	22pcs

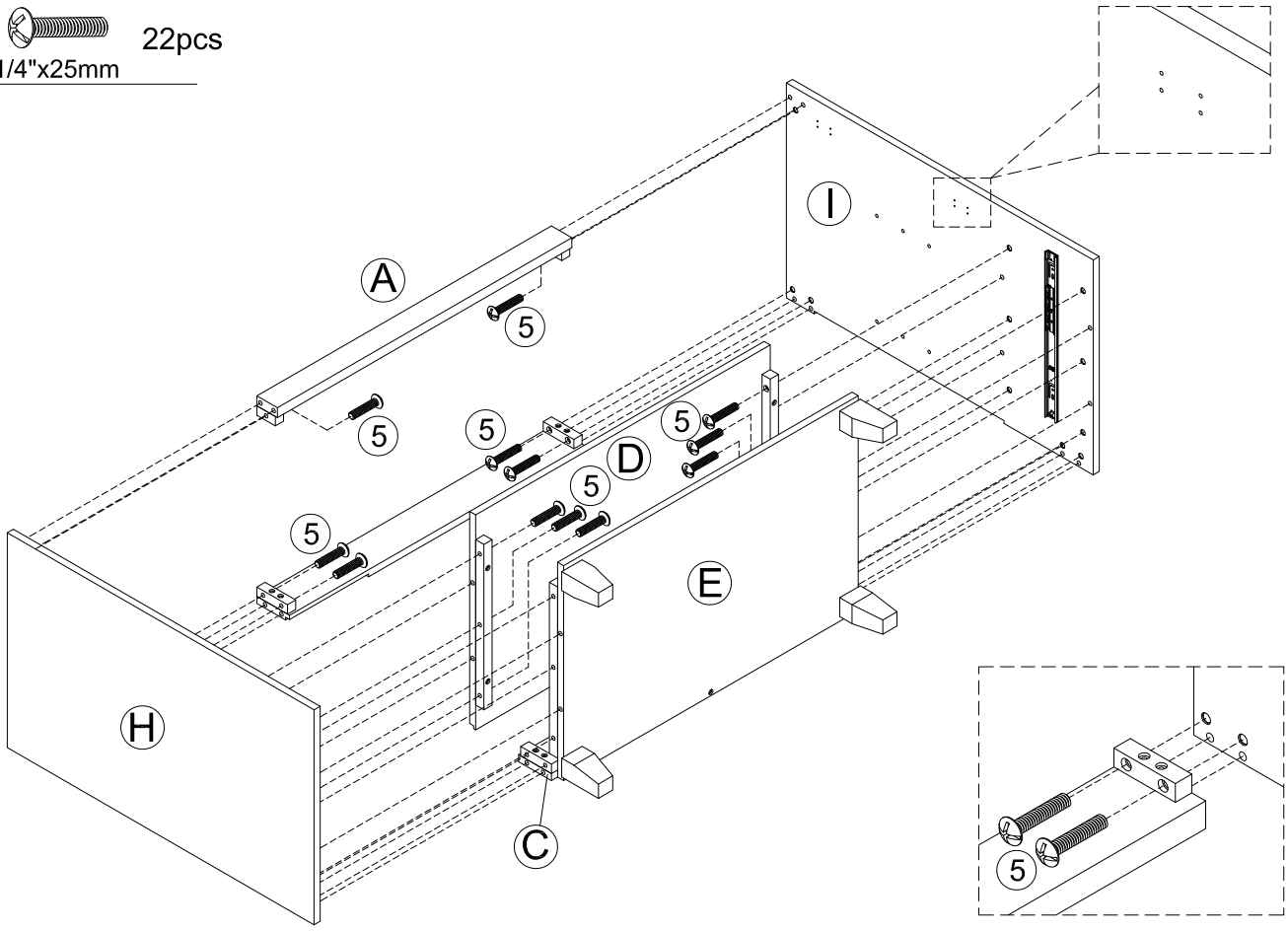

STEP 11

6 1pc
Ø4x35

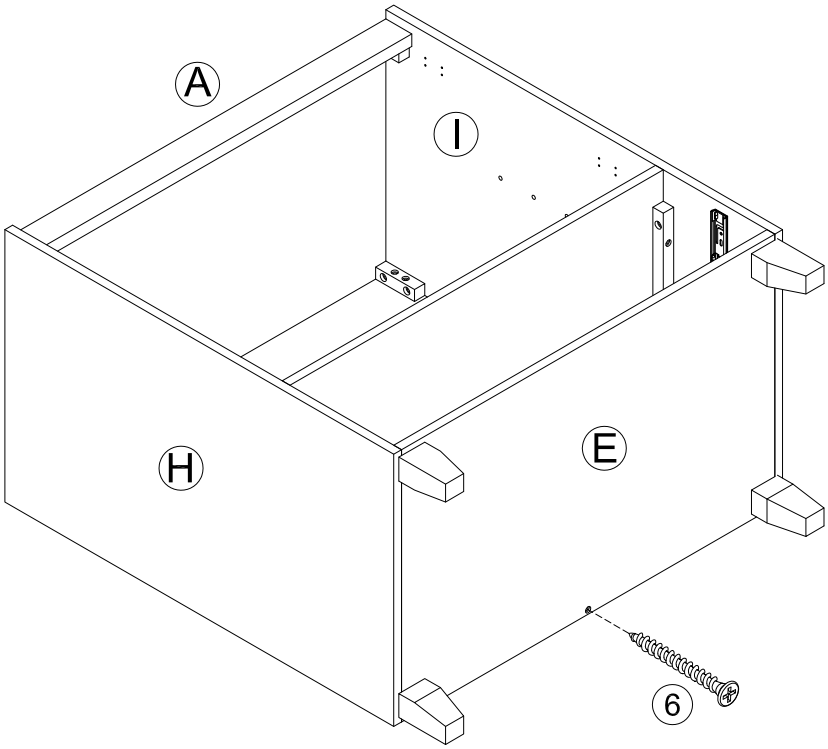

STEP 12

7 14pcs
Ø3x12mm

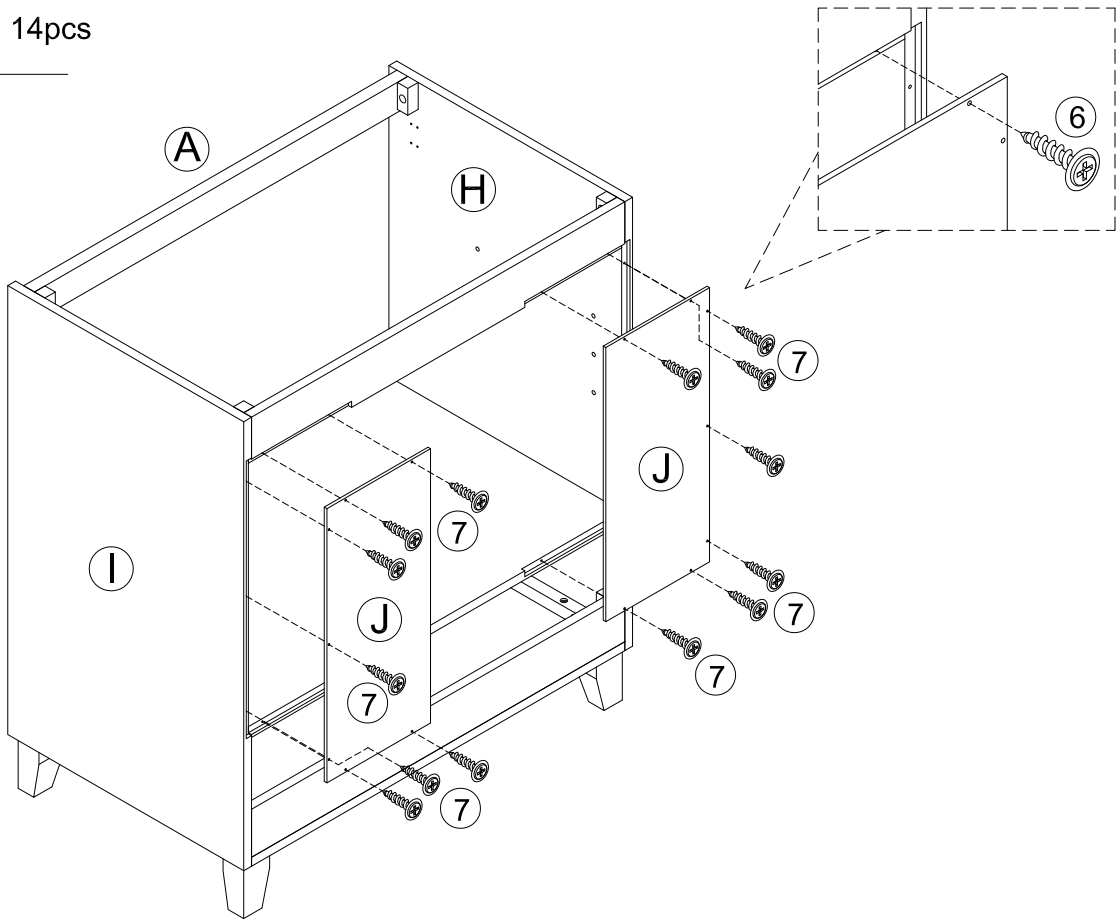

STEP 13

8 2pcs
Ø6x30mm

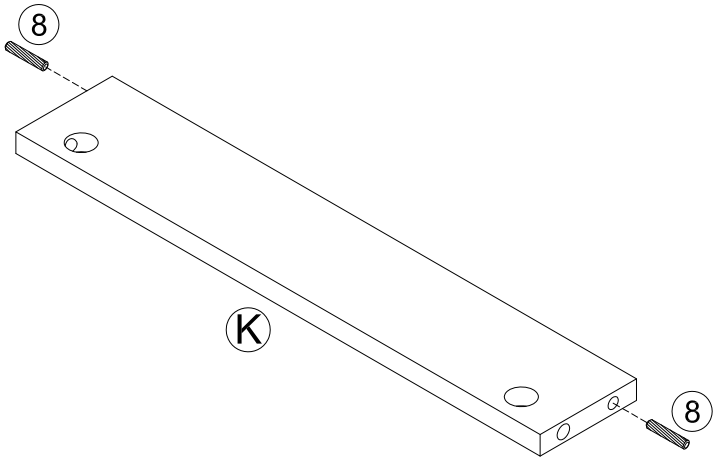

STEP 14

9 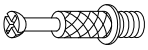 1pc
Ø6x33mm

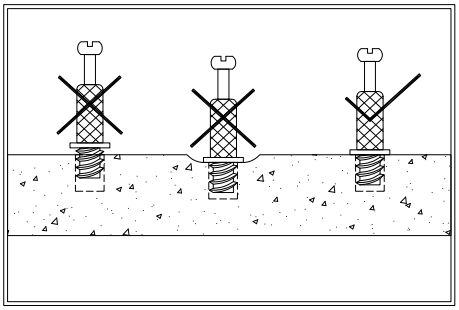

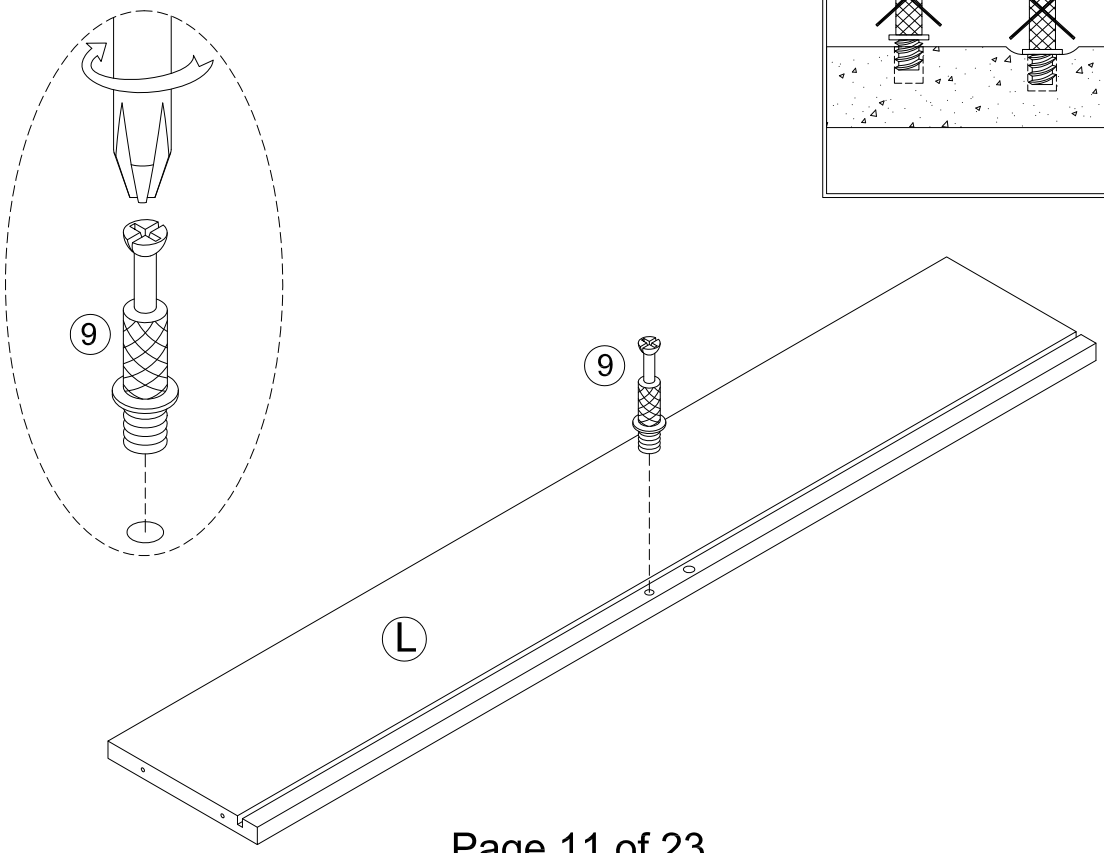

STEP 15

9 Ø6x33mm 5pcs

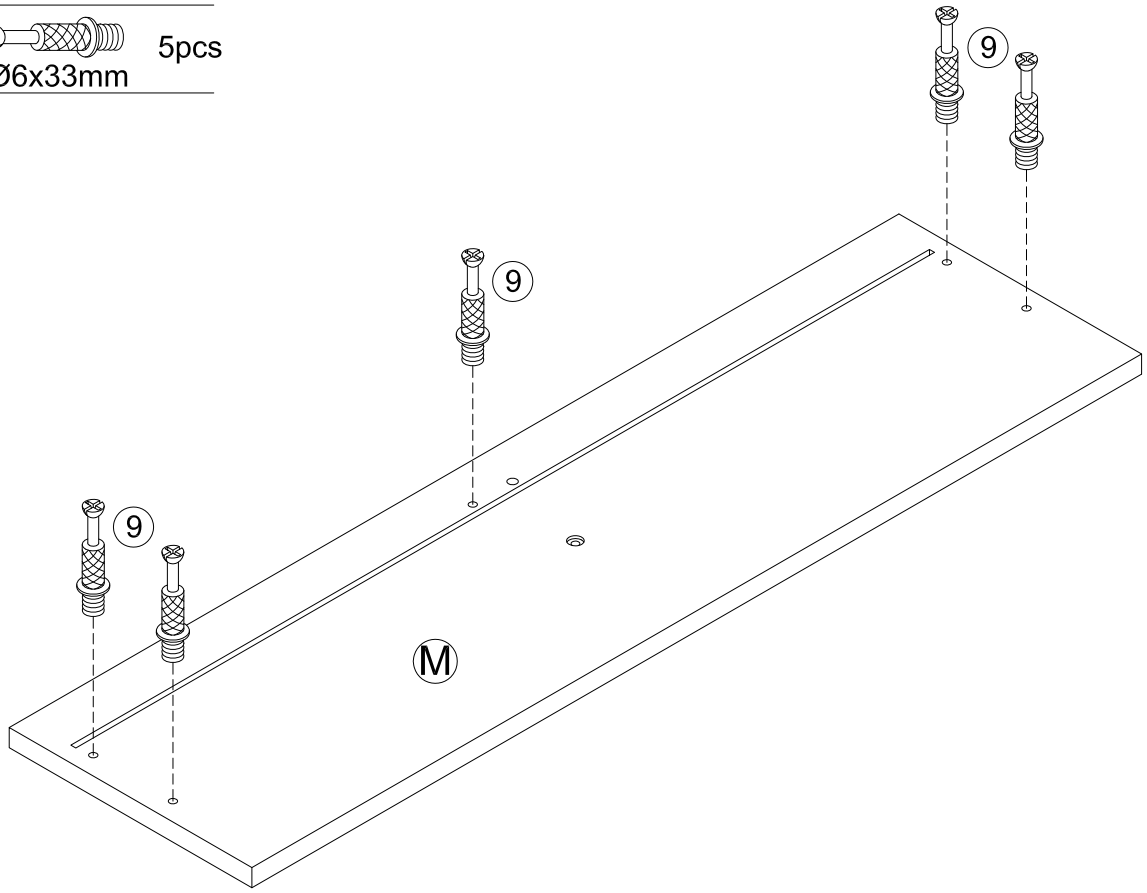

STEP 16

10 Ø4x25 4pcs

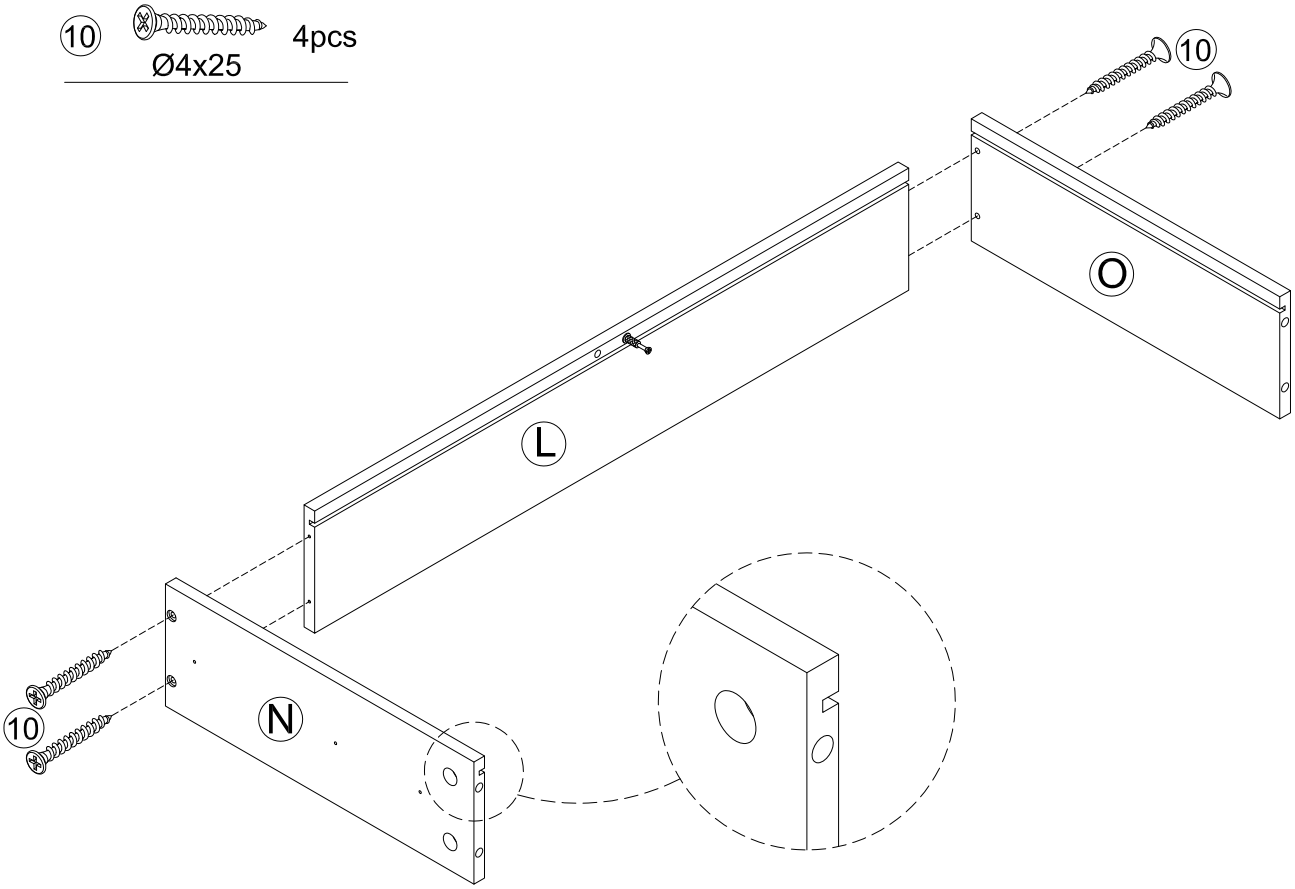

STEP 17

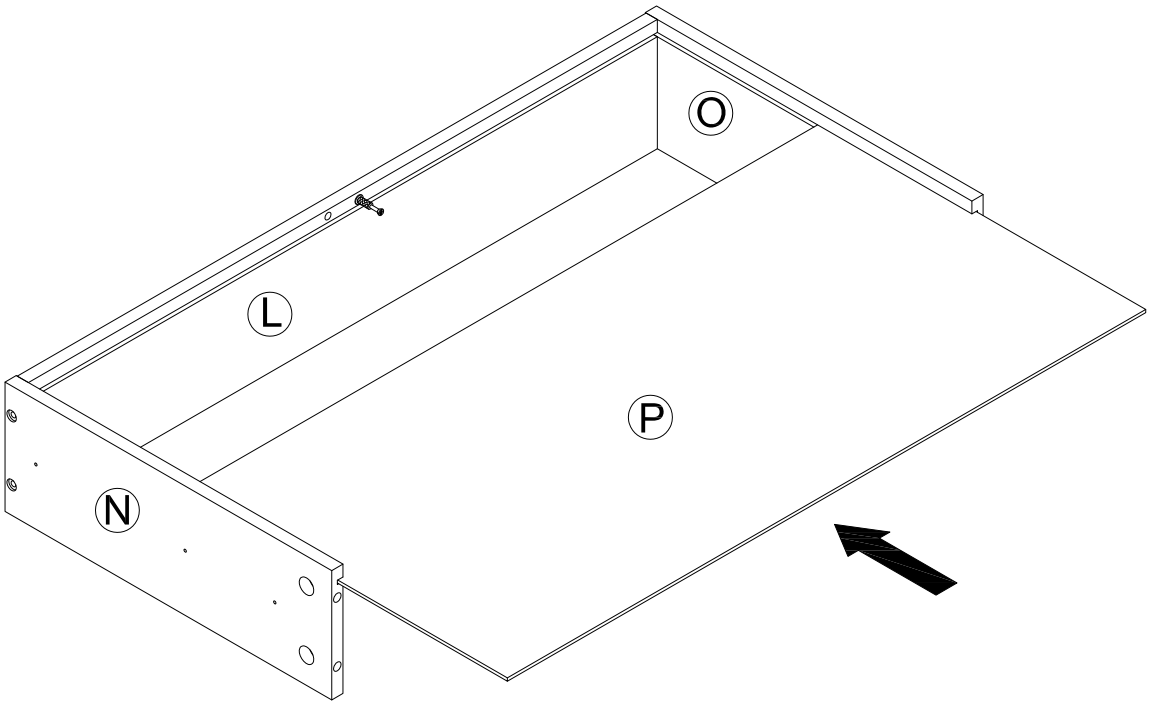

STEP 18

11	Ø15x9mm	1pc

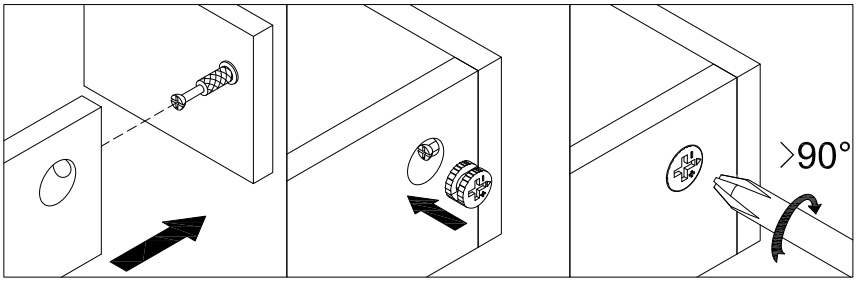

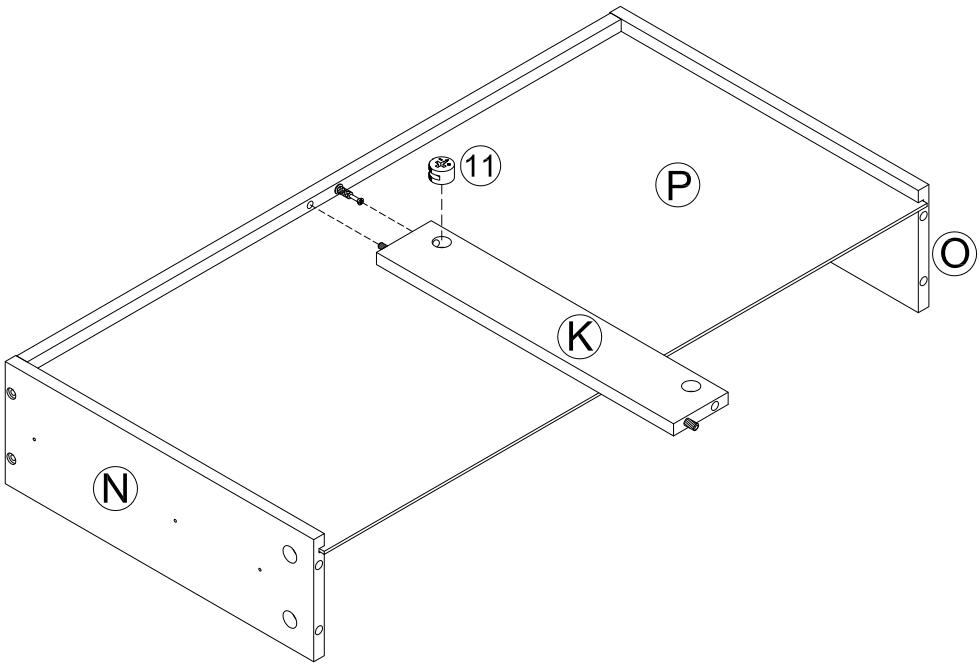

STEP 19

(11) 1pc
Ø15x9mm

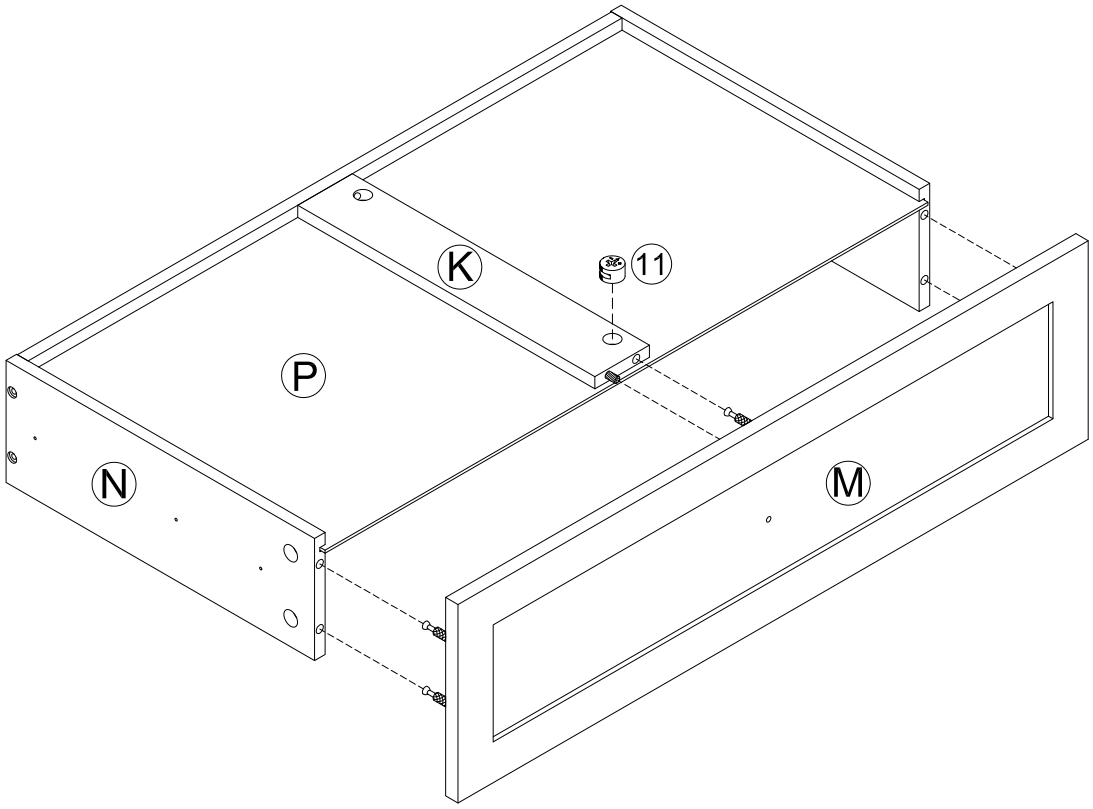

STEP 20

(11) 4pcs
Ø15x9mm

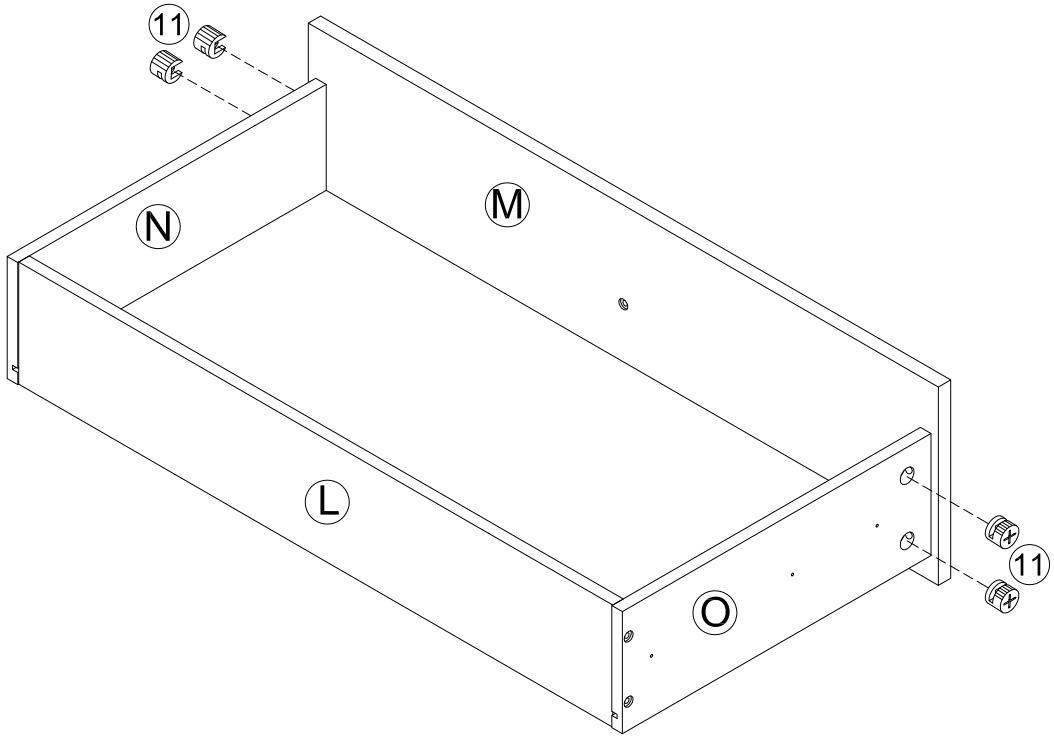

STEP 21

12	5/32"x18mm	1pc	13		1pc

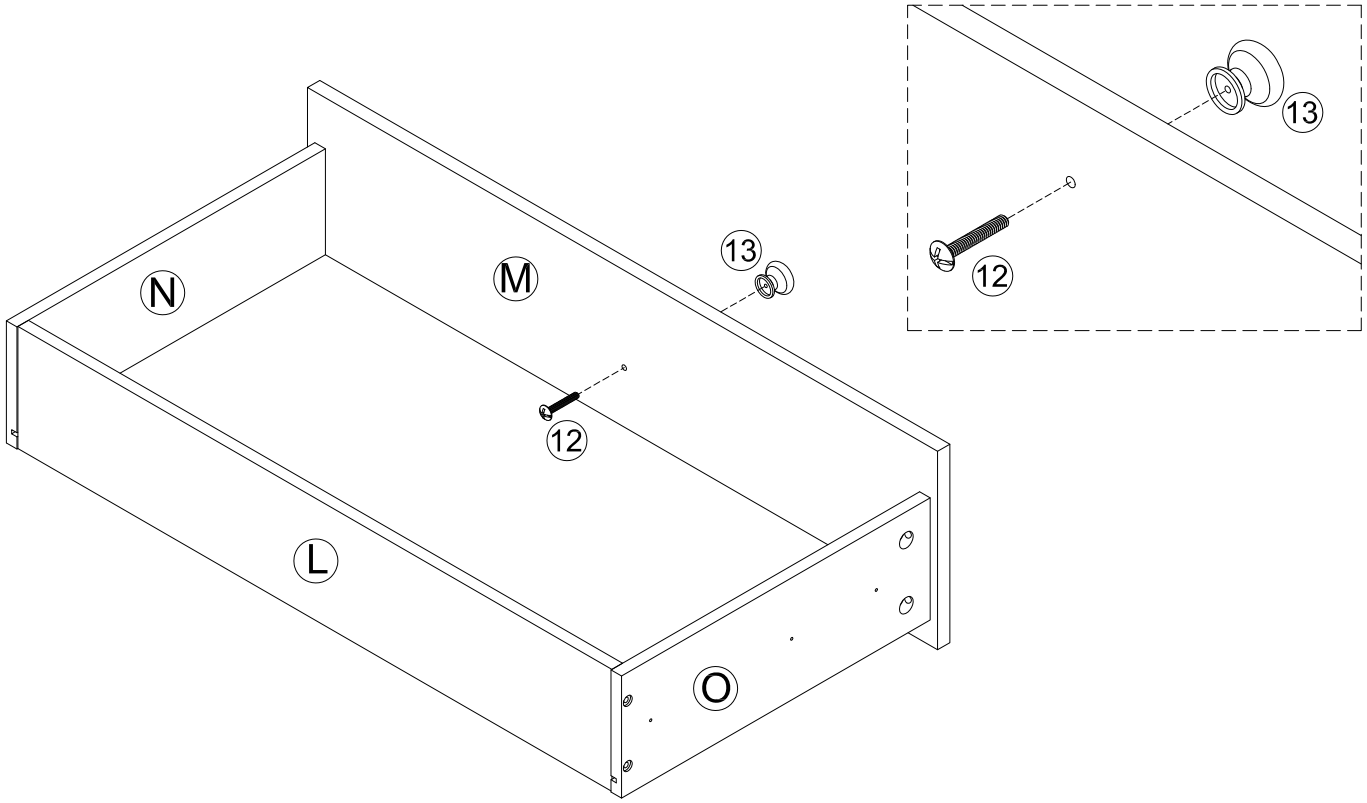

STEP 22

2		1pc	4	Ø3x10mm	3pcs

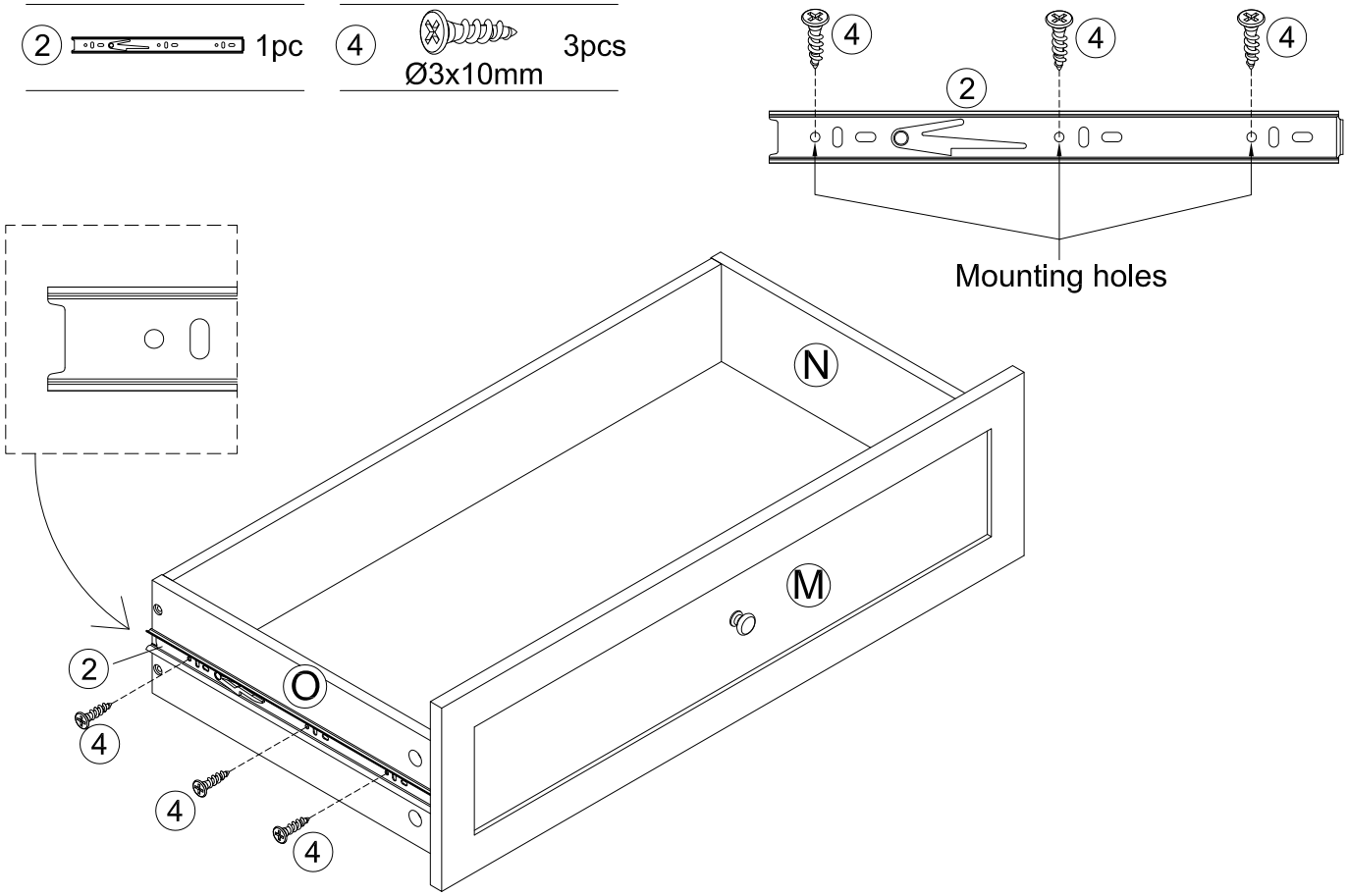

STEP 23

(2) 1pc

(4) Ø3x10mm 3pcs

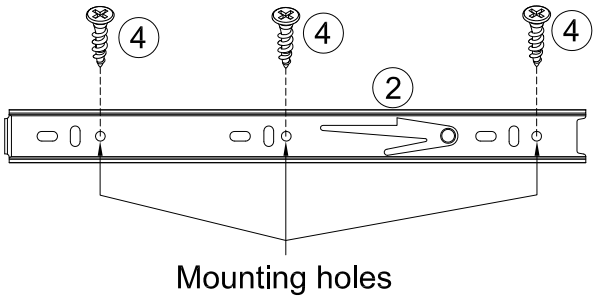

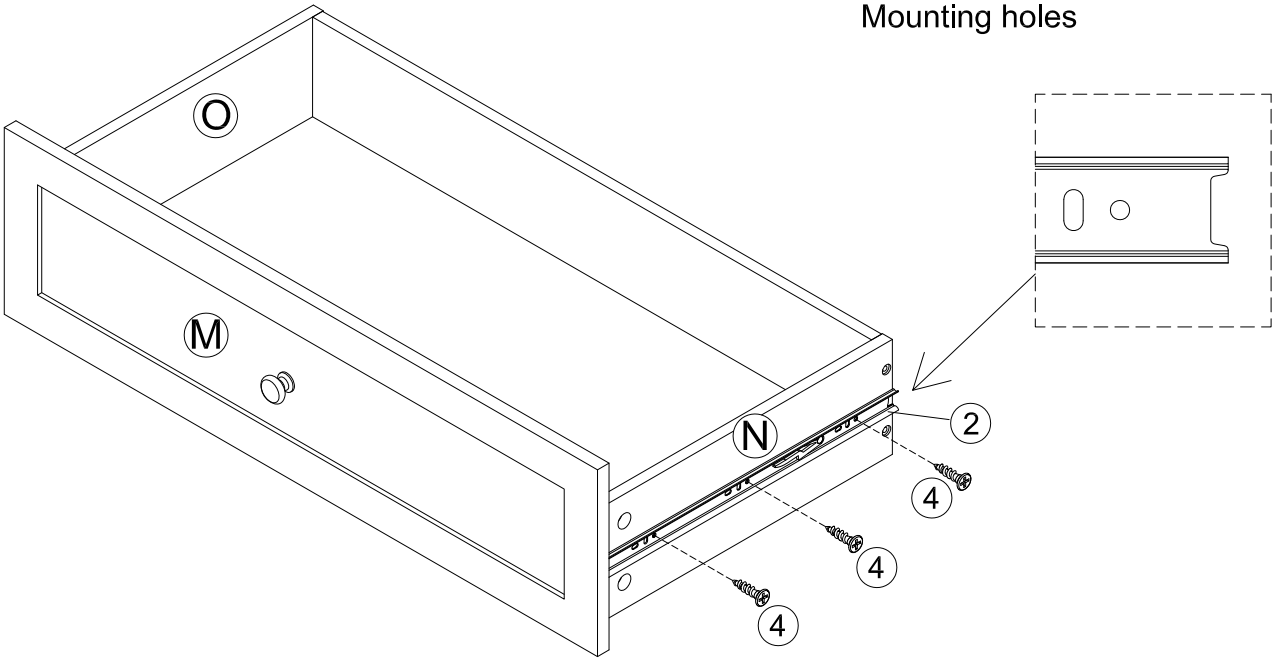

STEP 24

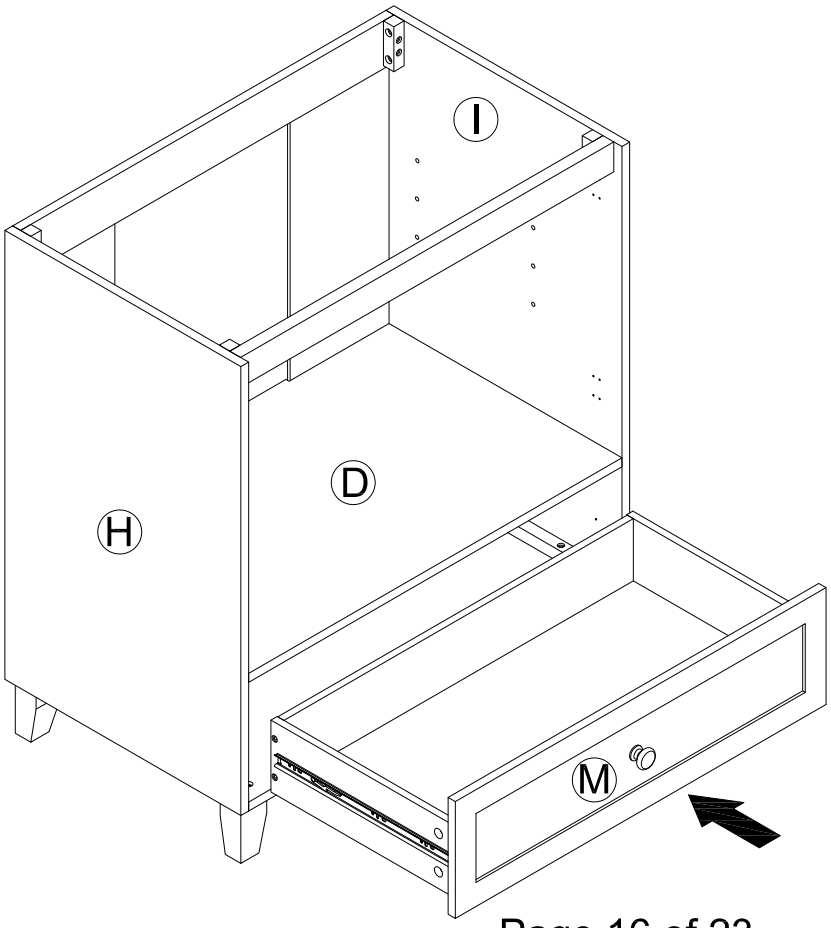

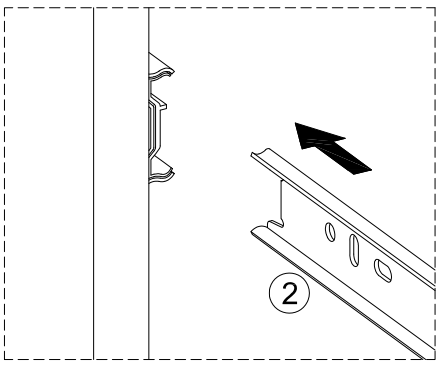

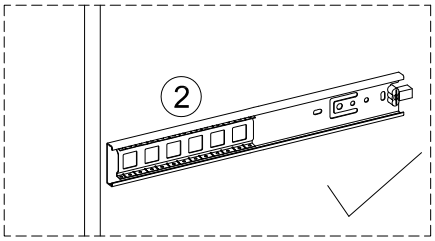

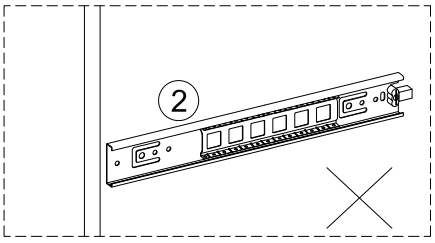

STEP 25

14 4pcs

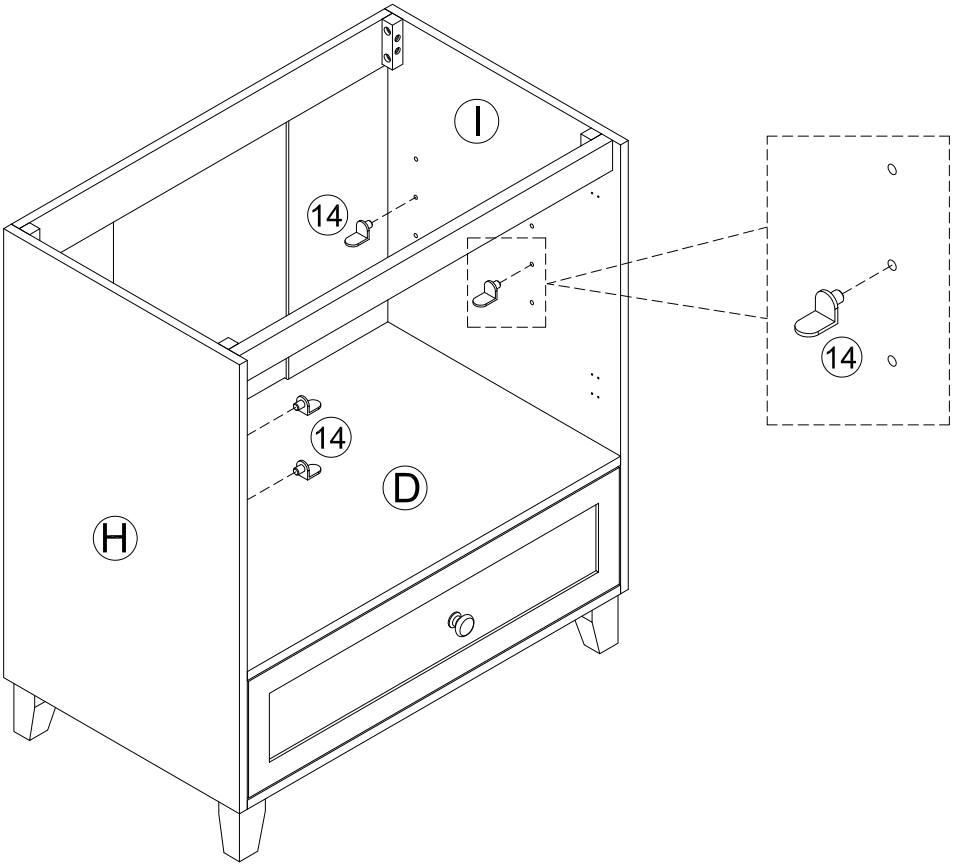

STEP 26

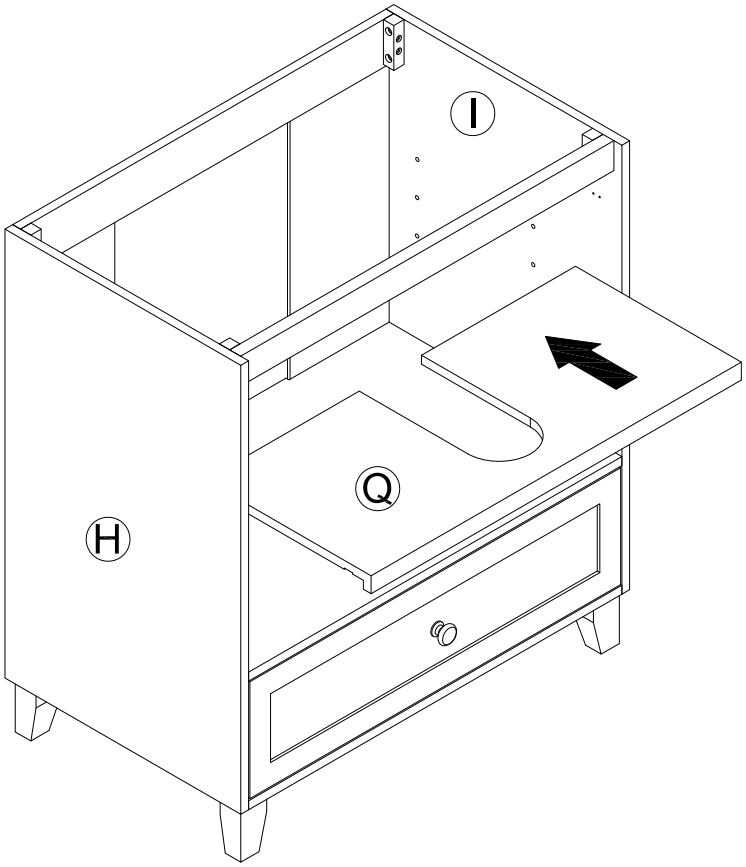

STEP 27

(9) Ø6x33mm 12pcs

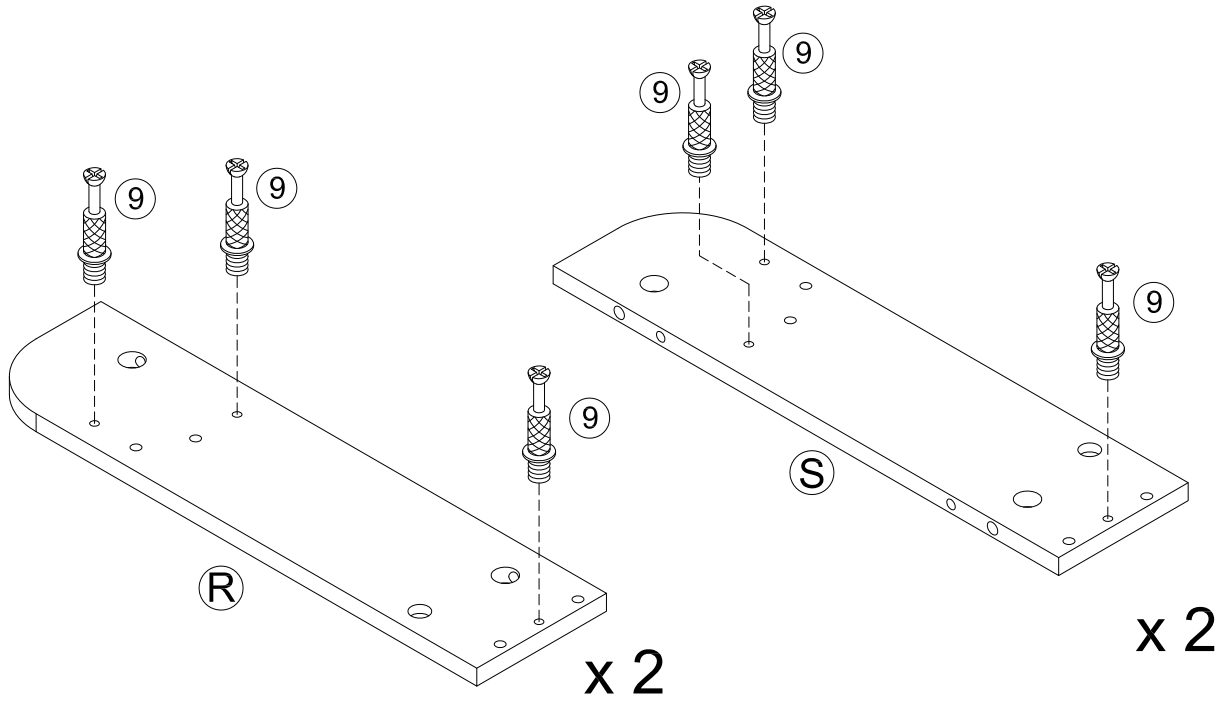

STEP 28

(8) Ø6x30mm 16pcs (9) Ø6x33mm 4pcs

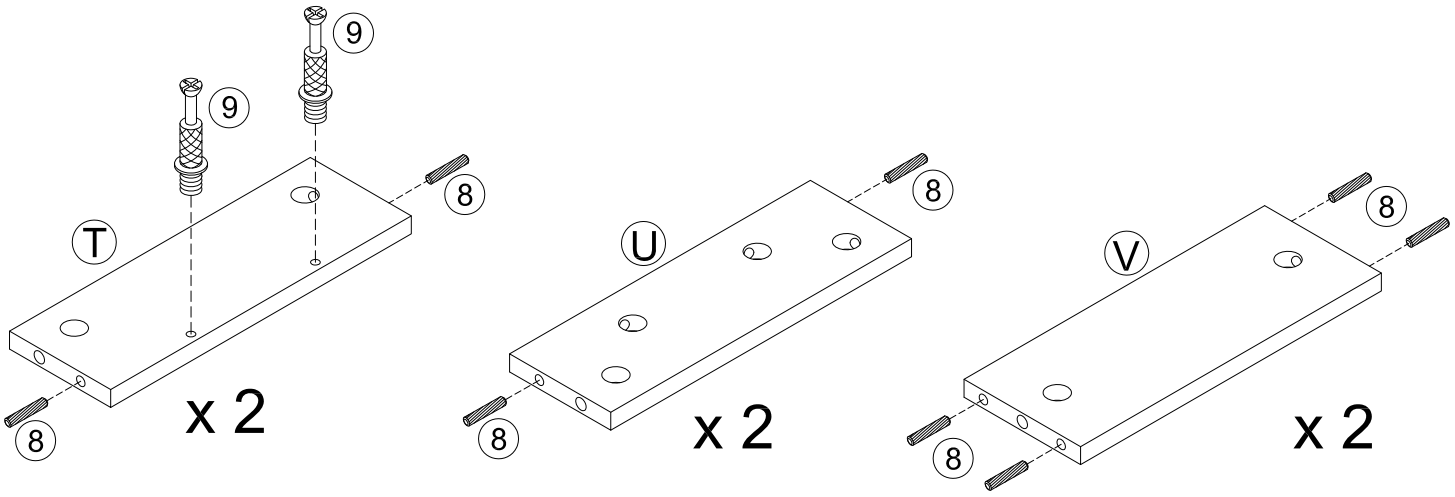

STEP 29

(11) Ø15x9mm 4pcs

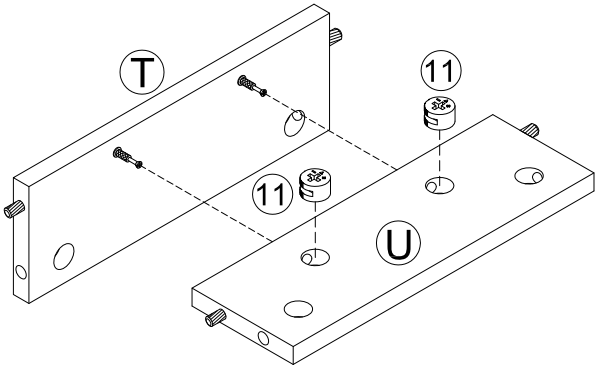

x 2

STEP 30

(11) Ø15x9mm 12pcs

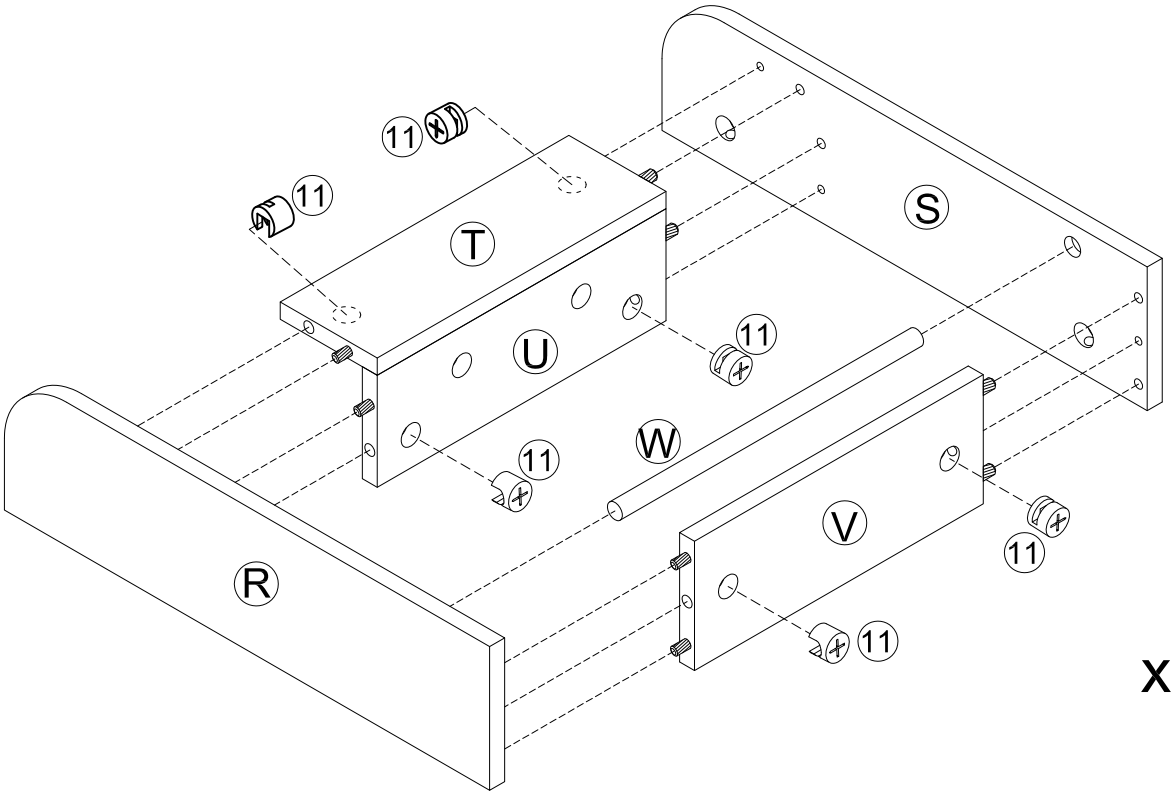

x 2

STEP 31

15	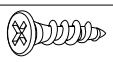 Ø4x12mm	8pcs	16	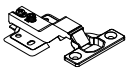	4pcs

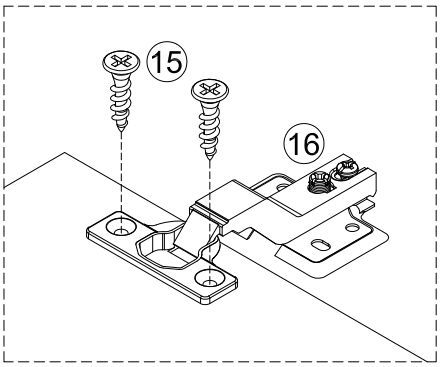

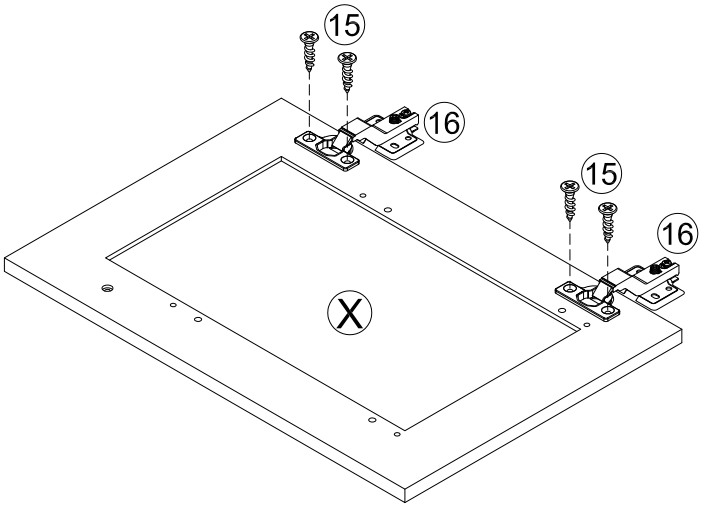

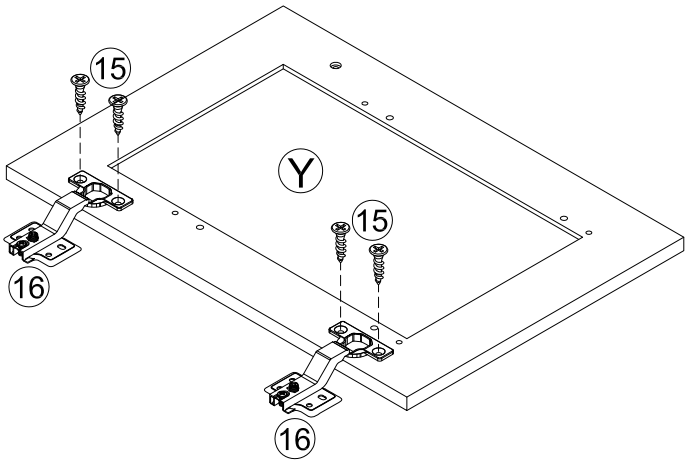

STEP 32

9	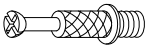 Ø6x33mm	8pcs

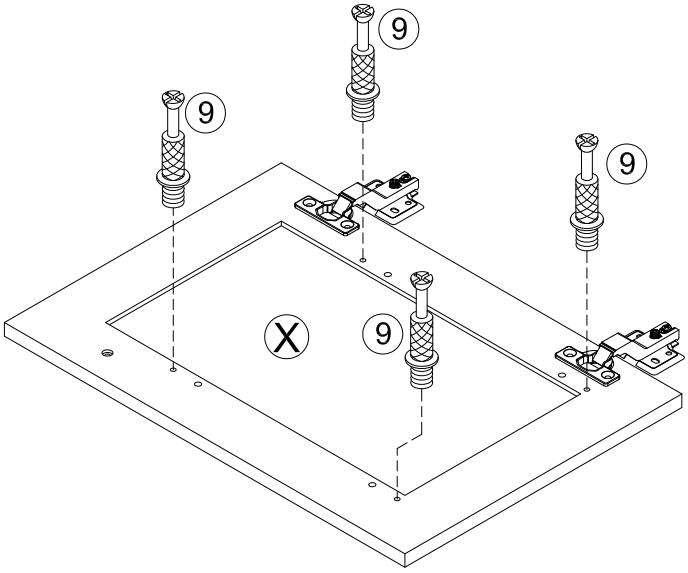

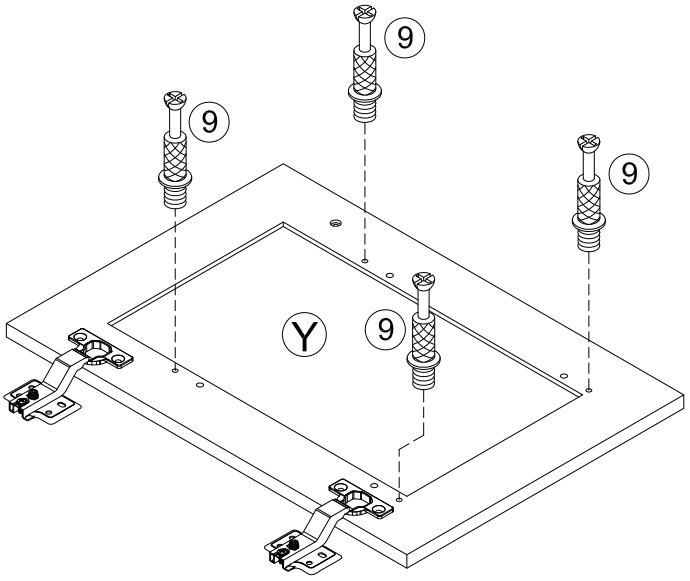

STEP 33

8	Ø6x30mm	4pcs	11	Ø15x9mm	4pcs

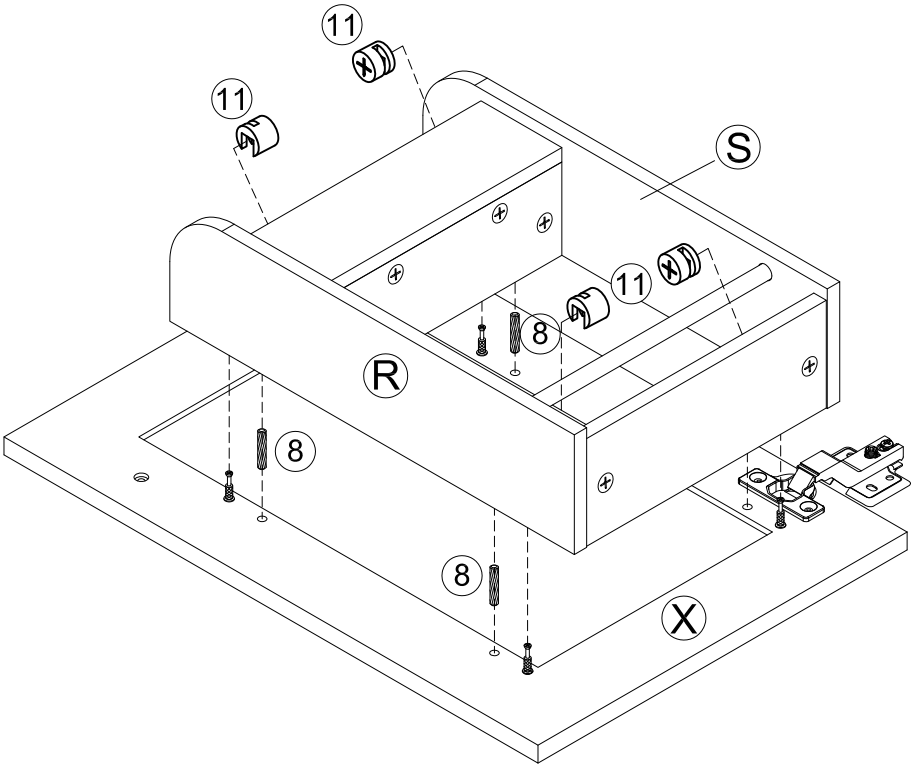

STEP 34

8	Ø6x30mm	4pcs	11	Ø15x9mm	4pcs

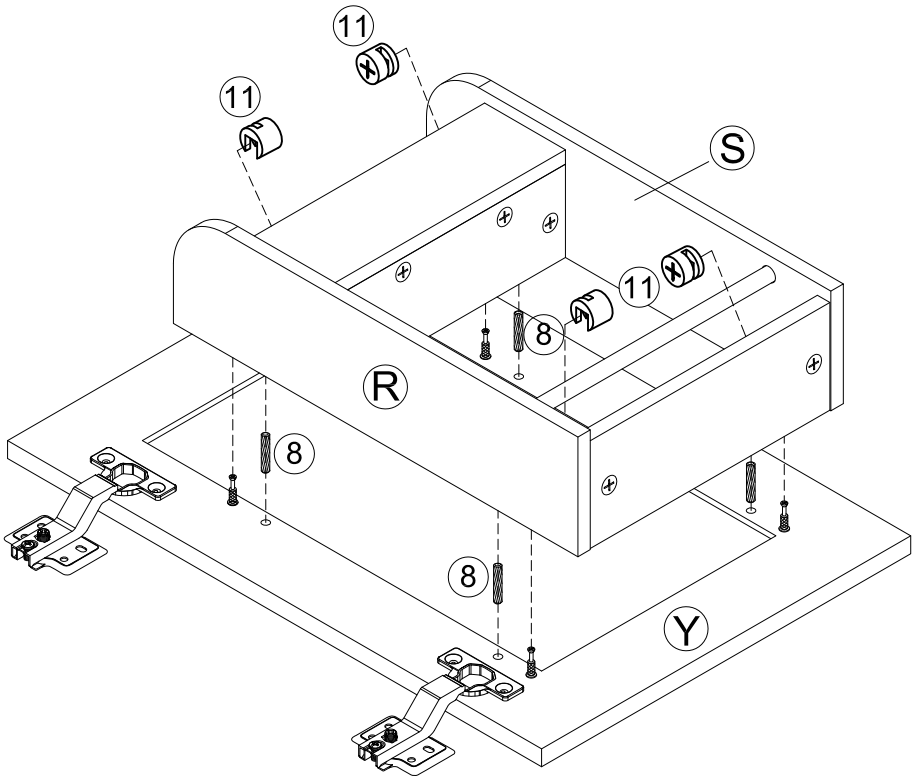

STEP 35

(15) 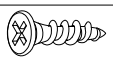 16pcs
Ø4x12mm

Three-way adjustable hinge for perfectly aligned doors

1.TO ADJUST DOOR FORWARD OR BACKWARD.
2.TO ADJUST DOOR TO RIGHT ORTO LEFT.
3.TO ADJUST DOOR UP OR DOWN.

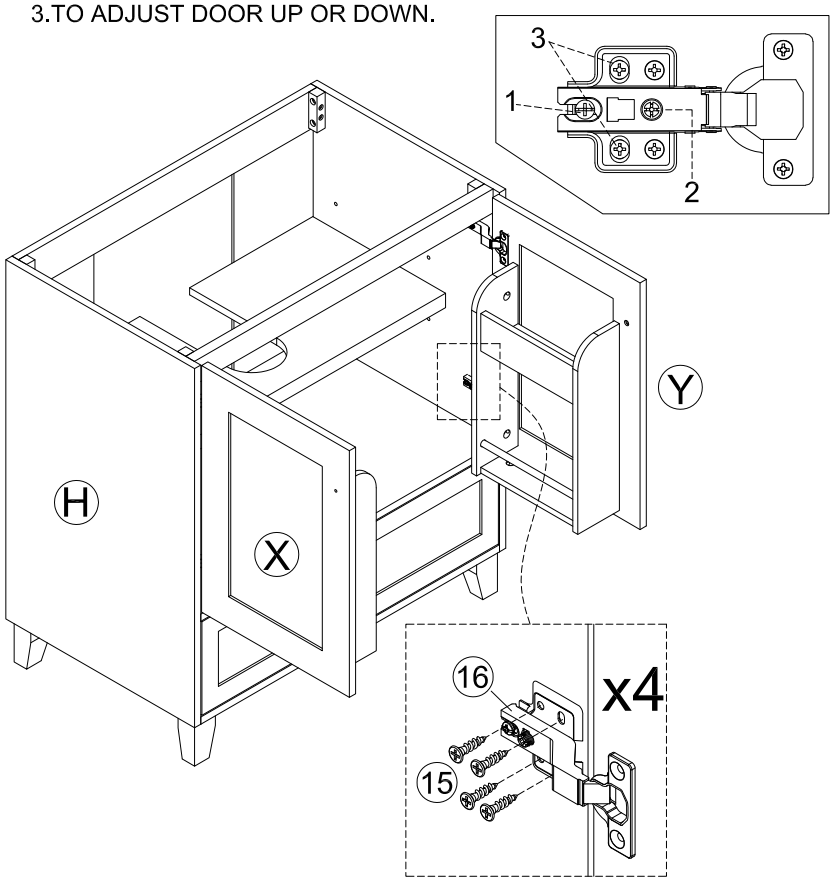

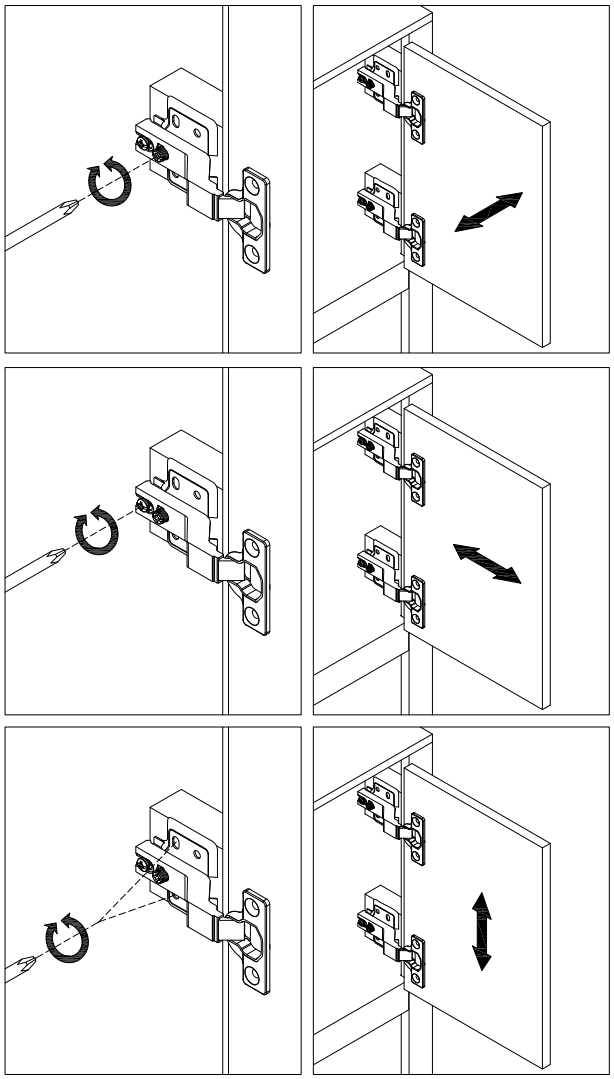

STEP 36

(12) 2pcs
5/32"x18mm

(13) 2pcs

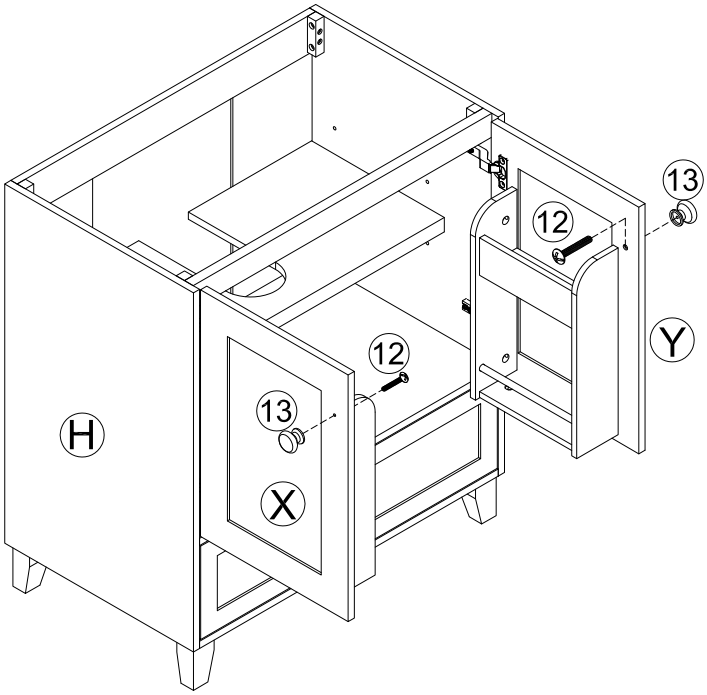

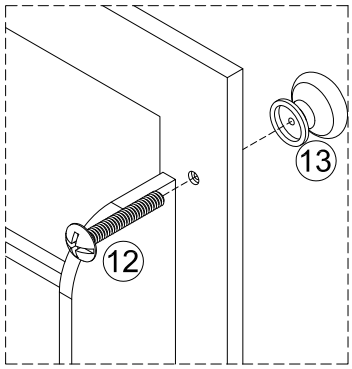

STEP 37

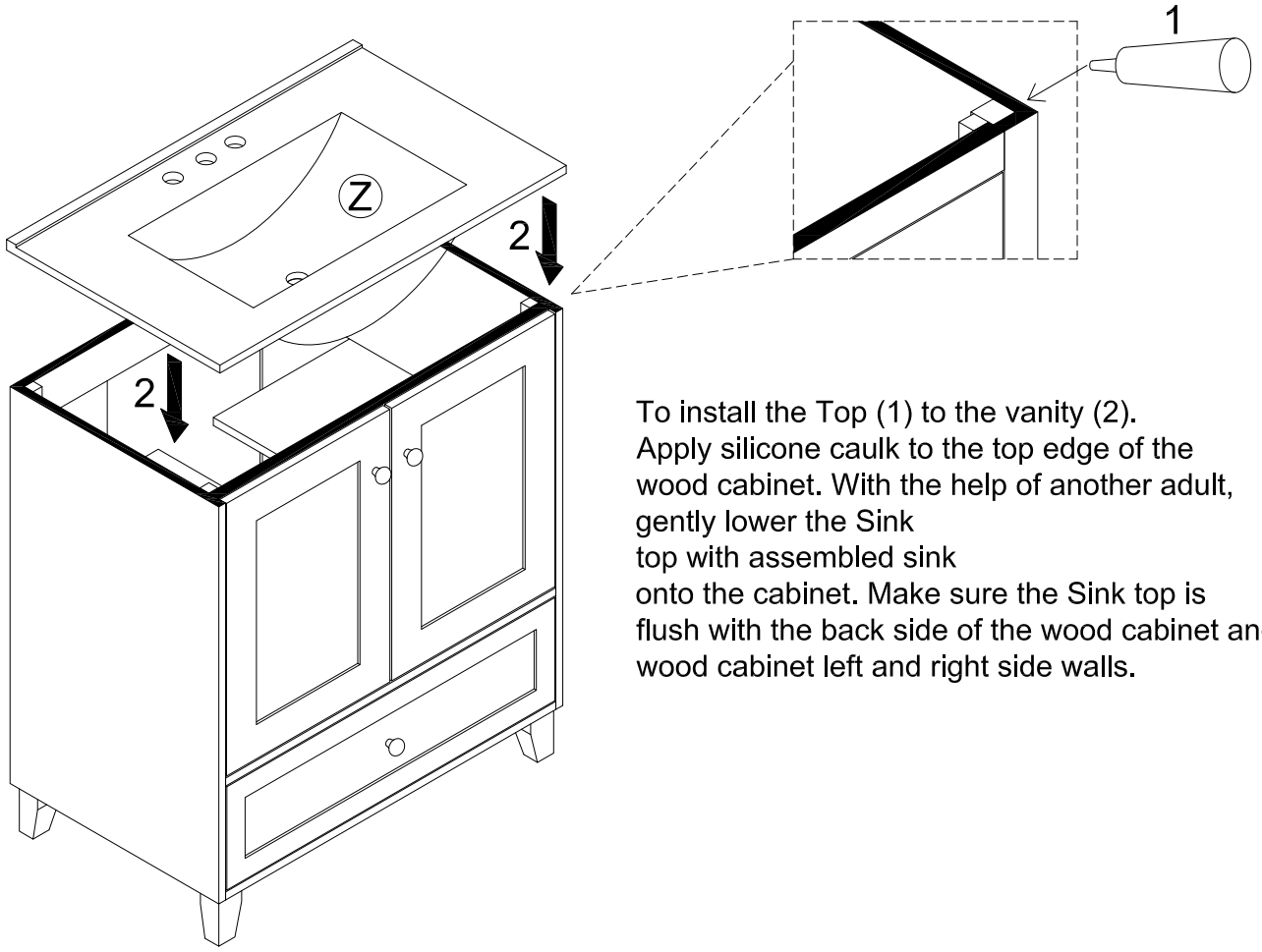

To install the Top (1) to the vanity (2).
Apply silicone caulk to the top edge of the wood cabinet. With the help of another adult, gently lower the Sink top with assembled sink onto the cabinet. Make sure the Sink top is flush with the back side of the wood cabinet and the wood cabinet left and right side walls.
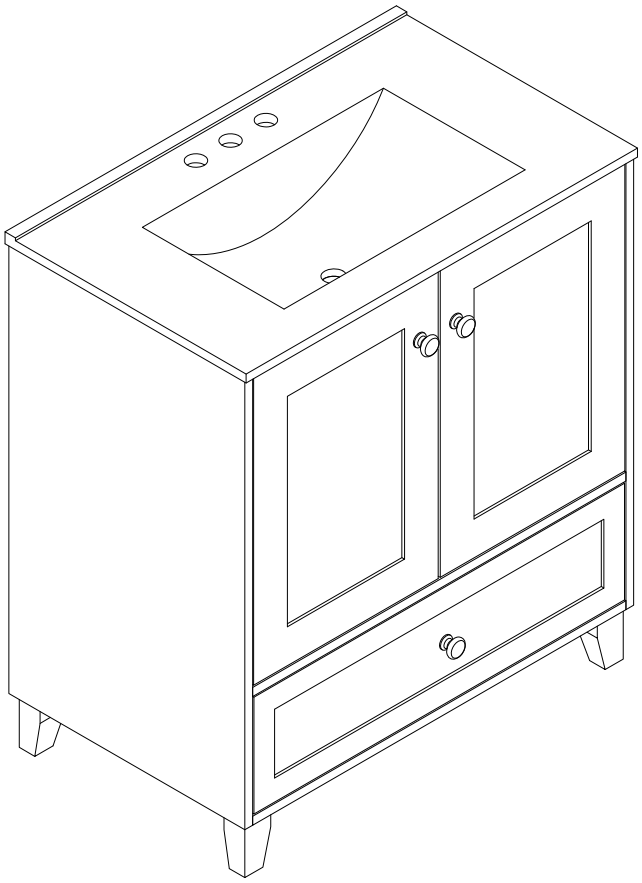
STEP 37