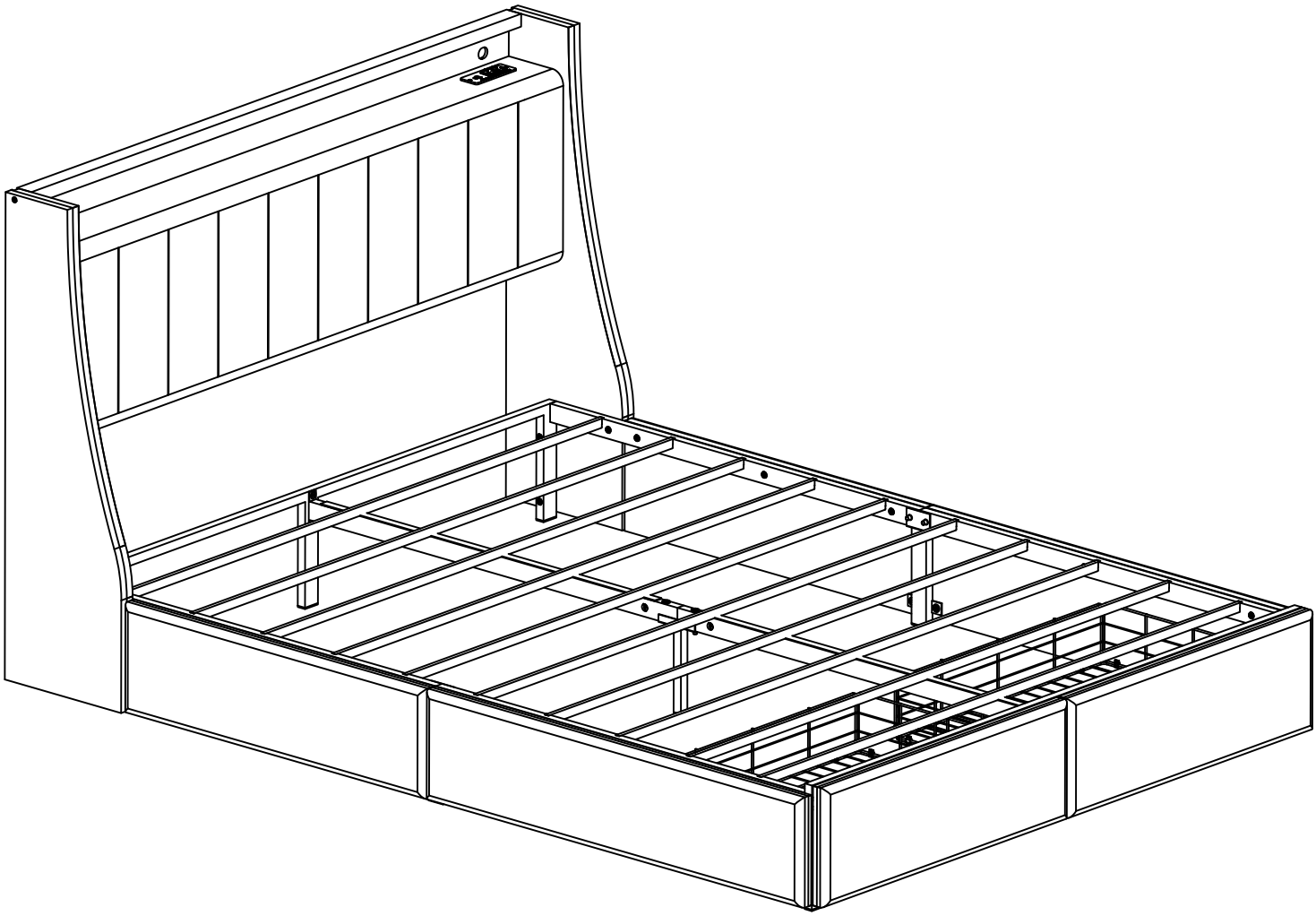

PRODUCT GUIDE AND INSTALLATION MANUAL

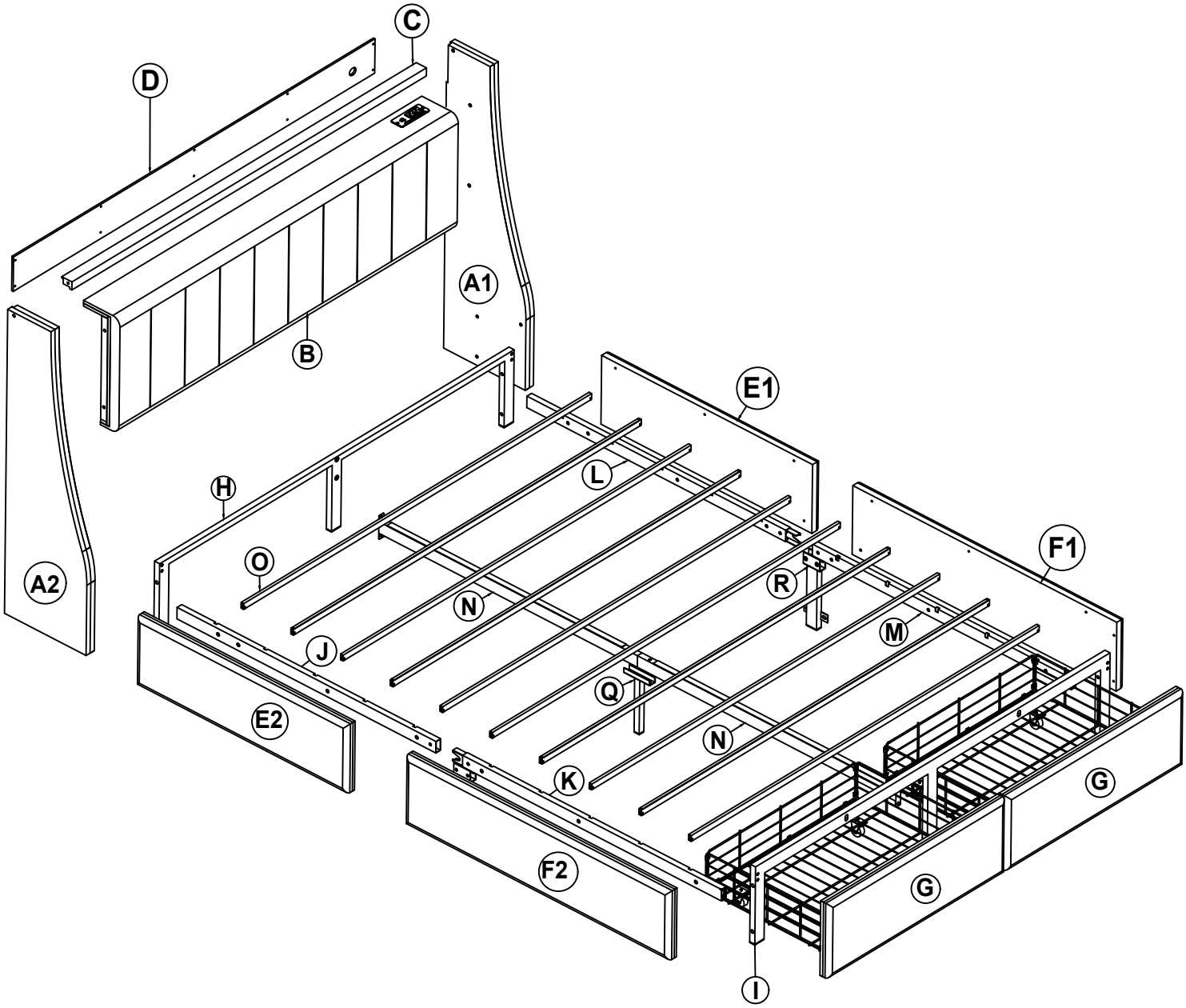
C
D
A1
B
E1
H
L
F1
O
A2
R
N
M
J
Q
E2
N
K
G
F2
G
I

Parts List:

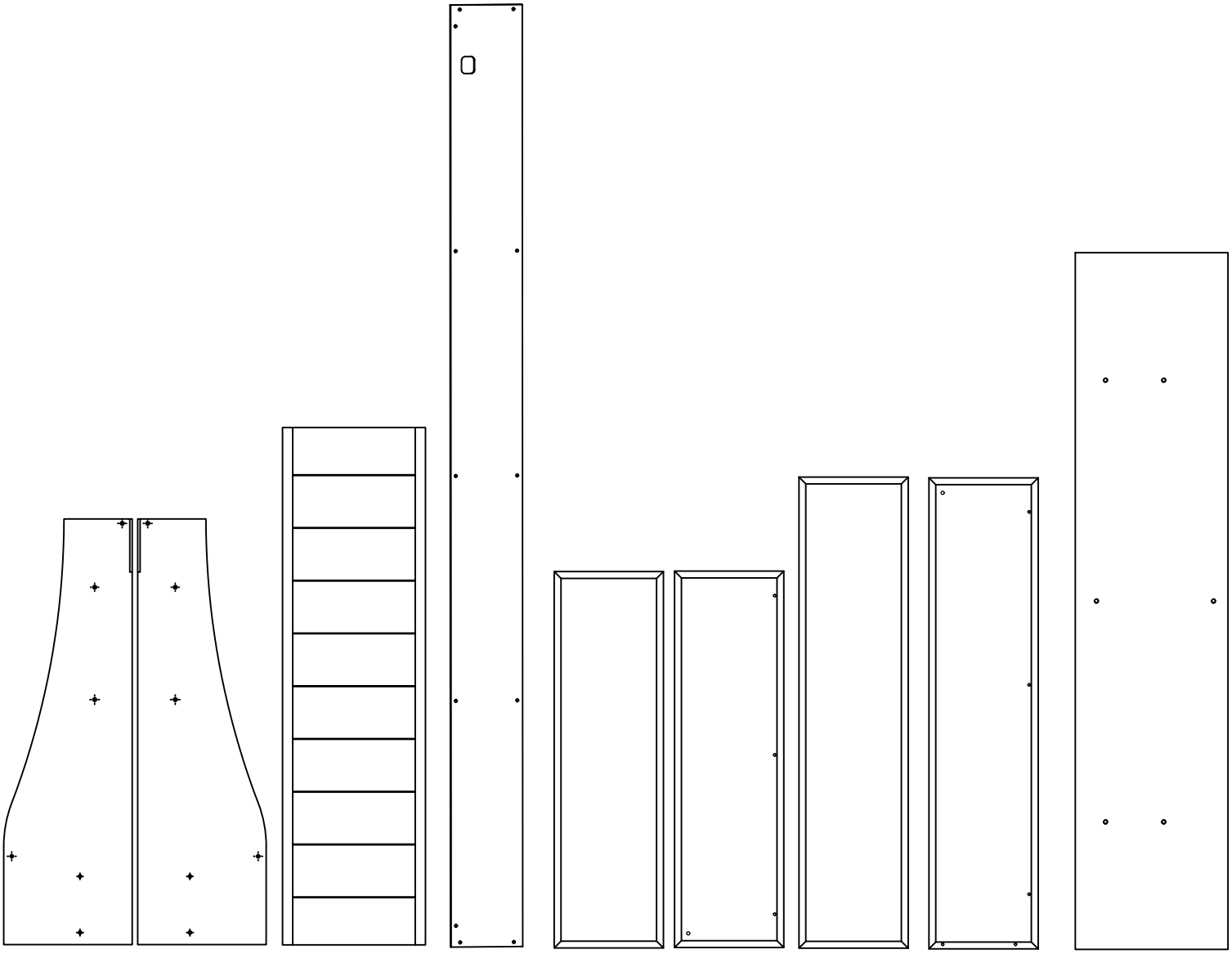

A2	A1	B	D	E1	E2	F1	F2	G
1pcs	1pcs	1pcs	1pcs	1pcs	1pcs	1pcs	1pcs	2pcs

Parts List:

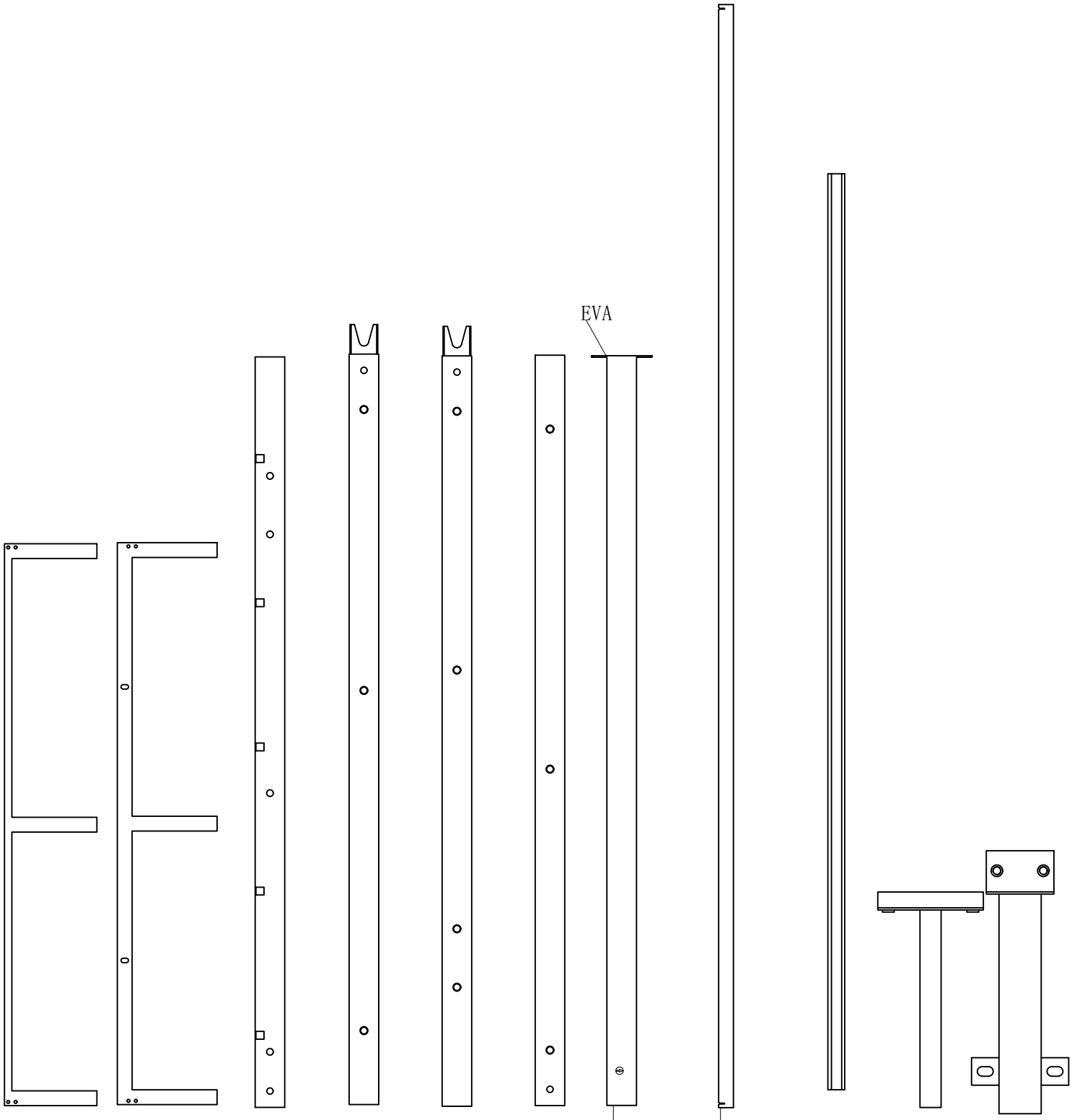

H	I	J	K	L	M	N	O	C	Q	R
1pcs	1pcs	1pcs	1pcs	1pcs	1pcs	2pcs	10pcs	1pcs	1pcs	2pcs

Parts List:

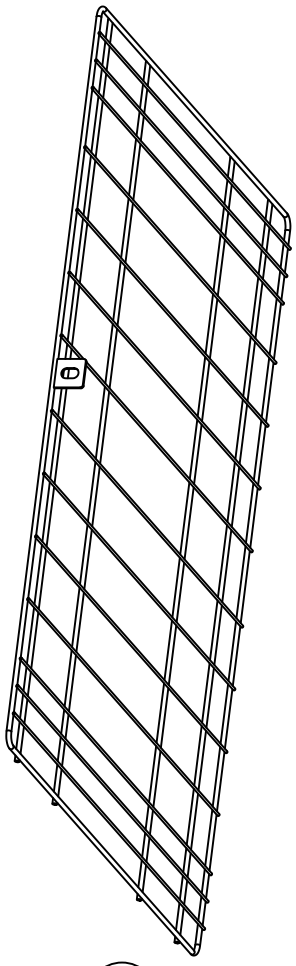

Z4
2pcs

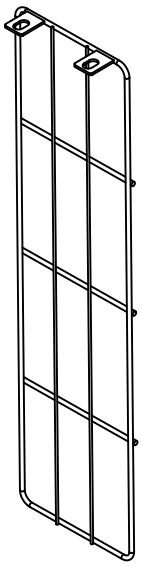

Z2
4pcs

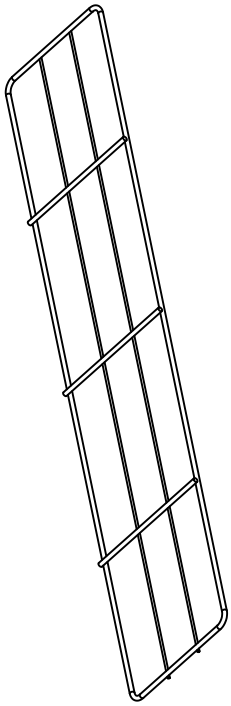

Z3
2pcs

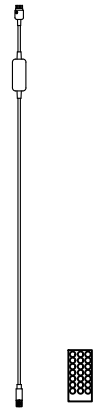

U1
1pcs

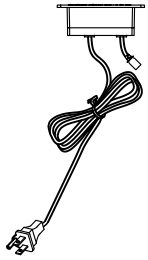

U3
1pcs

W
1pcs

Whasher Ø 6xØ 18mm
X
2pcs

M6x40mm
T3
4pcs

M6x45mm
T4
4pcs

M6x50mm
T5
8pcs

M4x15mm
V
14pcs

M6x15mm
T1
14pcs

M6x30mm
T2
12pcs

M8x35mm
Y1
12pcs

M8x55mm
Y2
2pcs

M8x15mm
Y3
4pcs

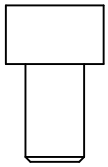

M6x10mm
Z8
2pcs

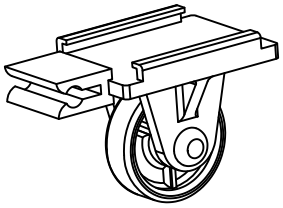

Z5
8pcs

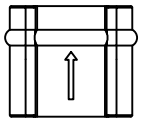

Q1
20pcs

1.1

Step 1

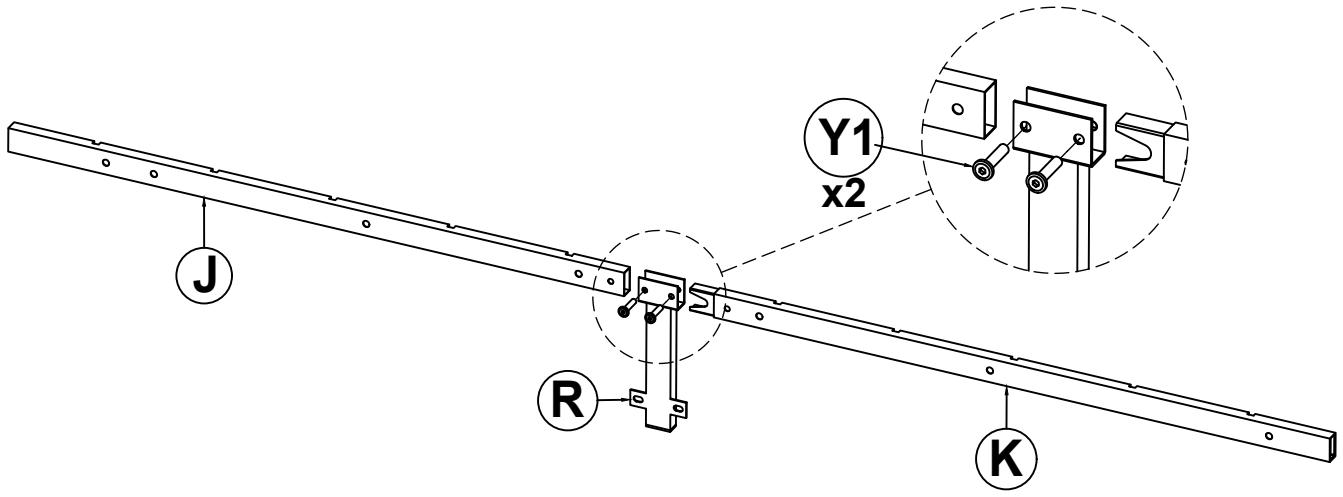

1.2

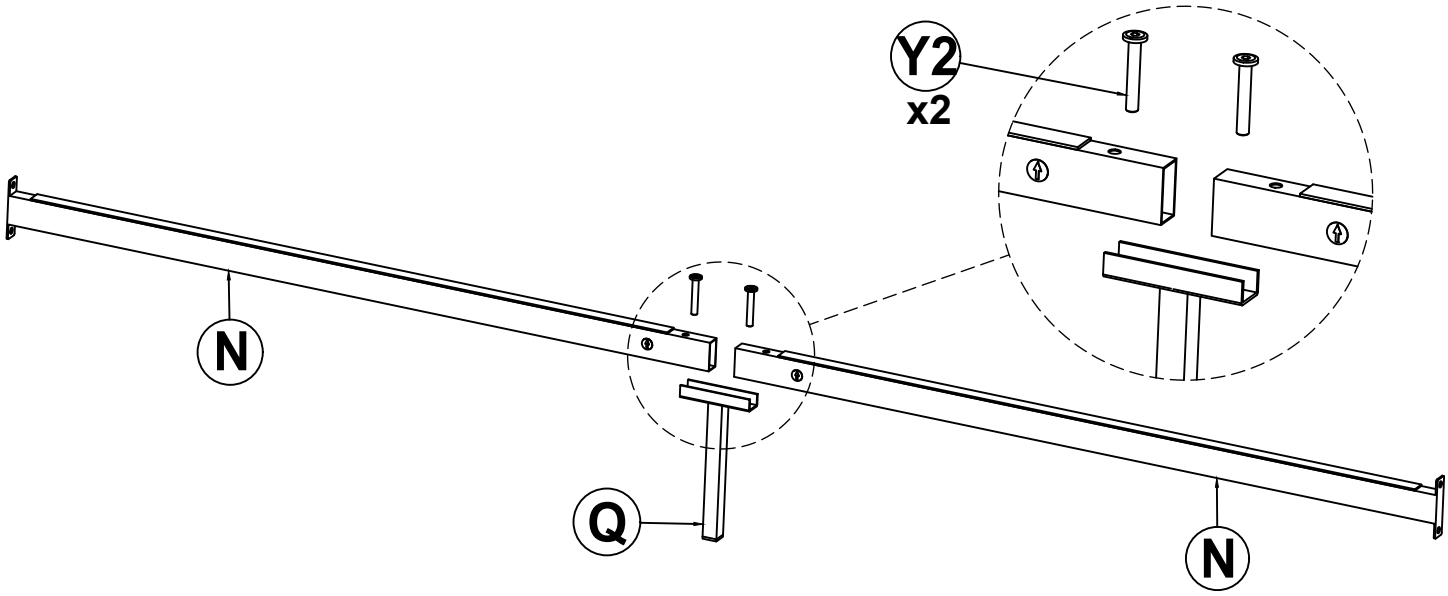

1.3

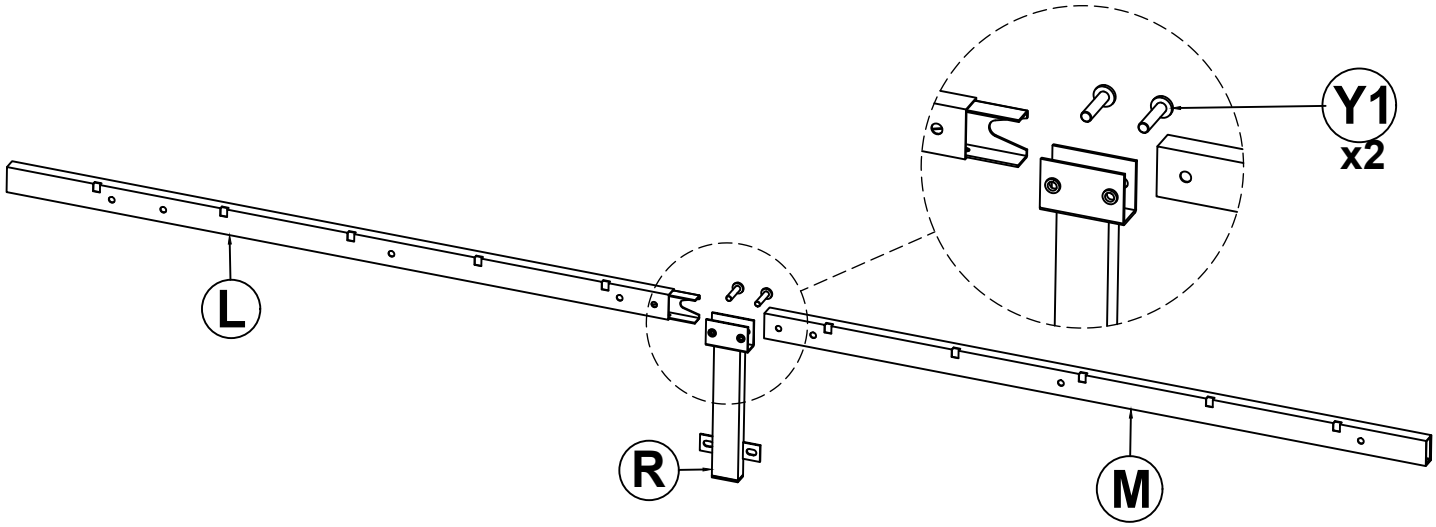

Step 2

2.1

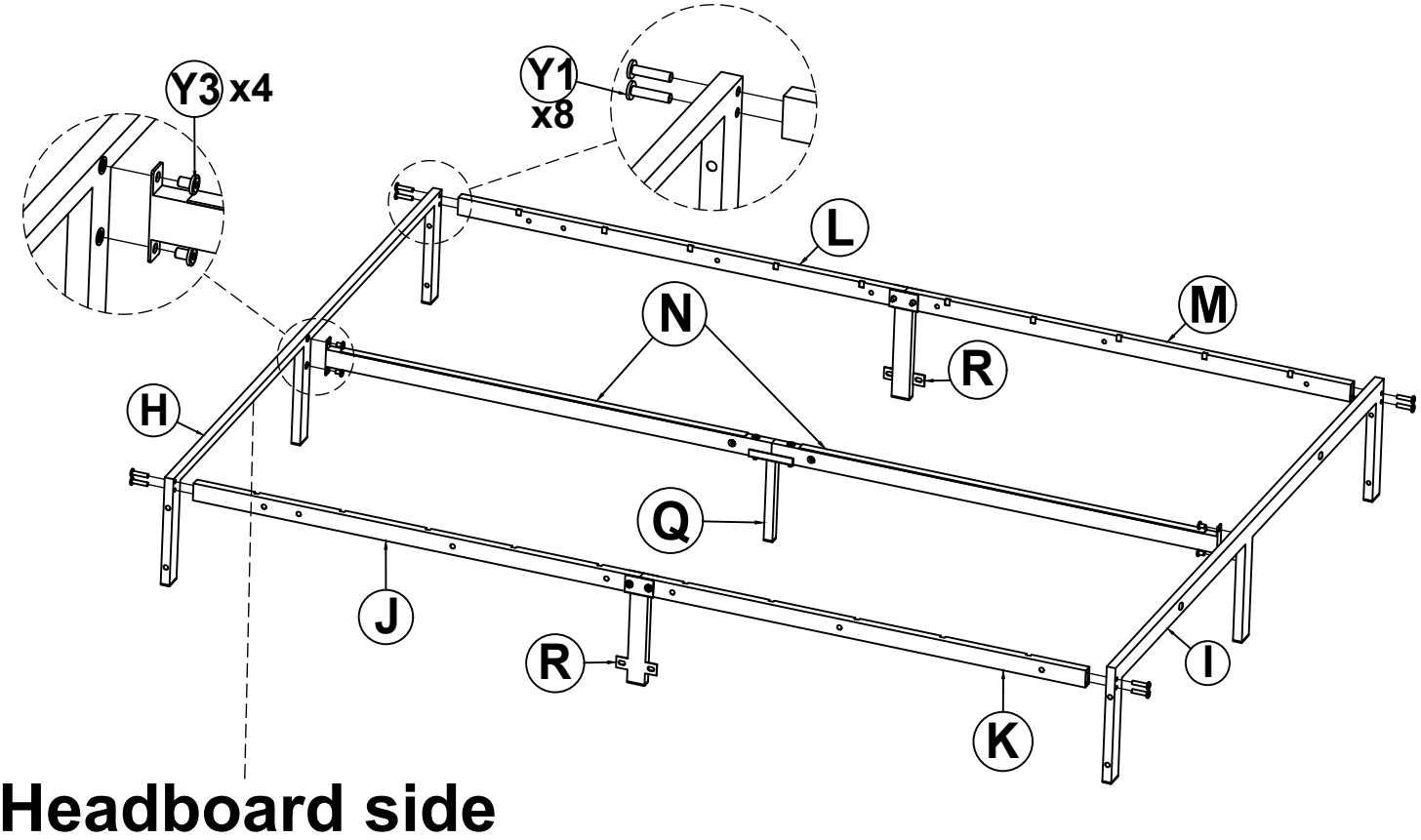
Y3 x4
Y1
x8
L
M
N
R
H
Q
J
R
I
K
Headboard side

2.2

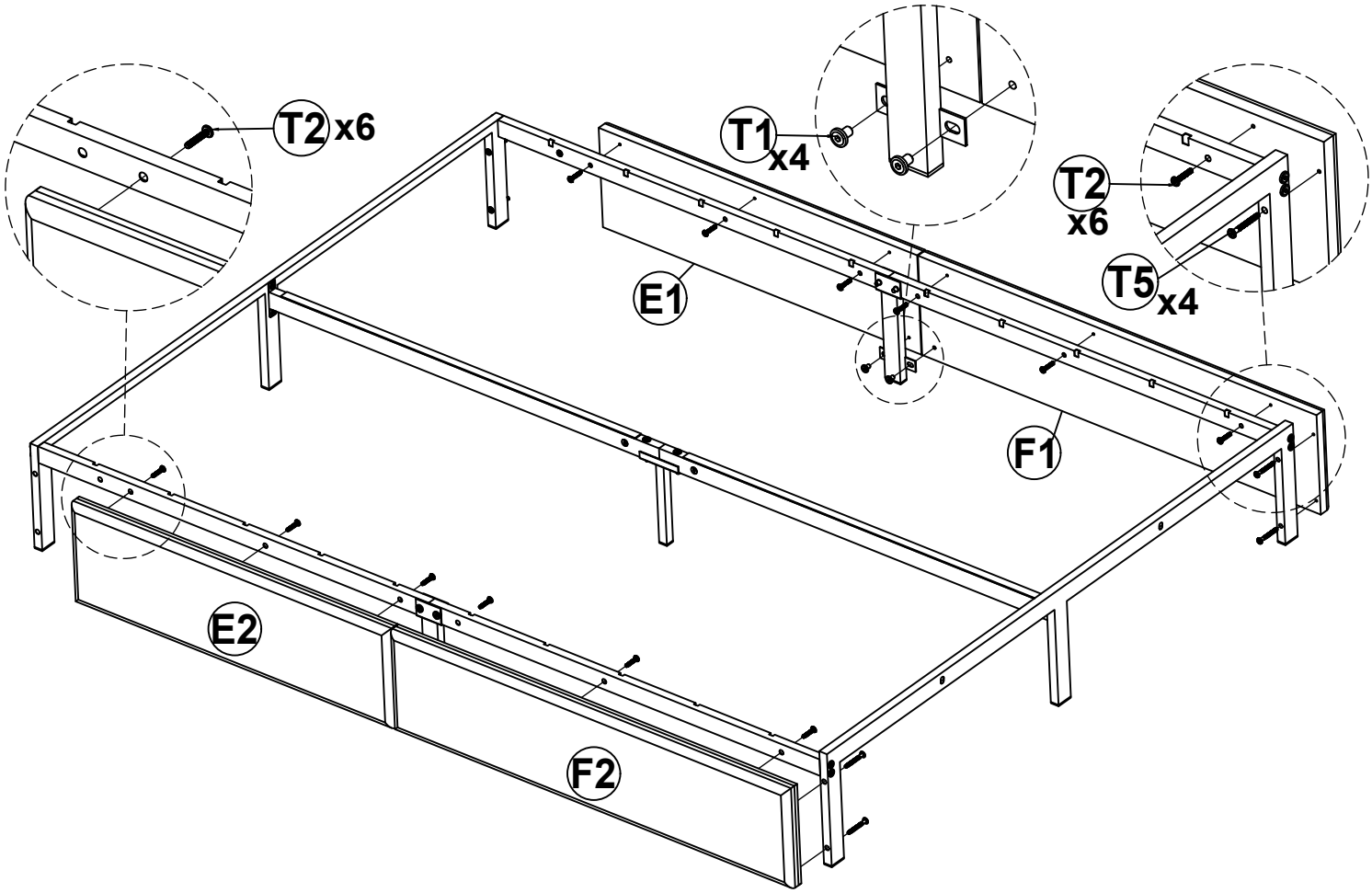
T2 x6
T1
x4
T2
x6
T5 x4
E1
F1
E2
F2

Step 3

3.1

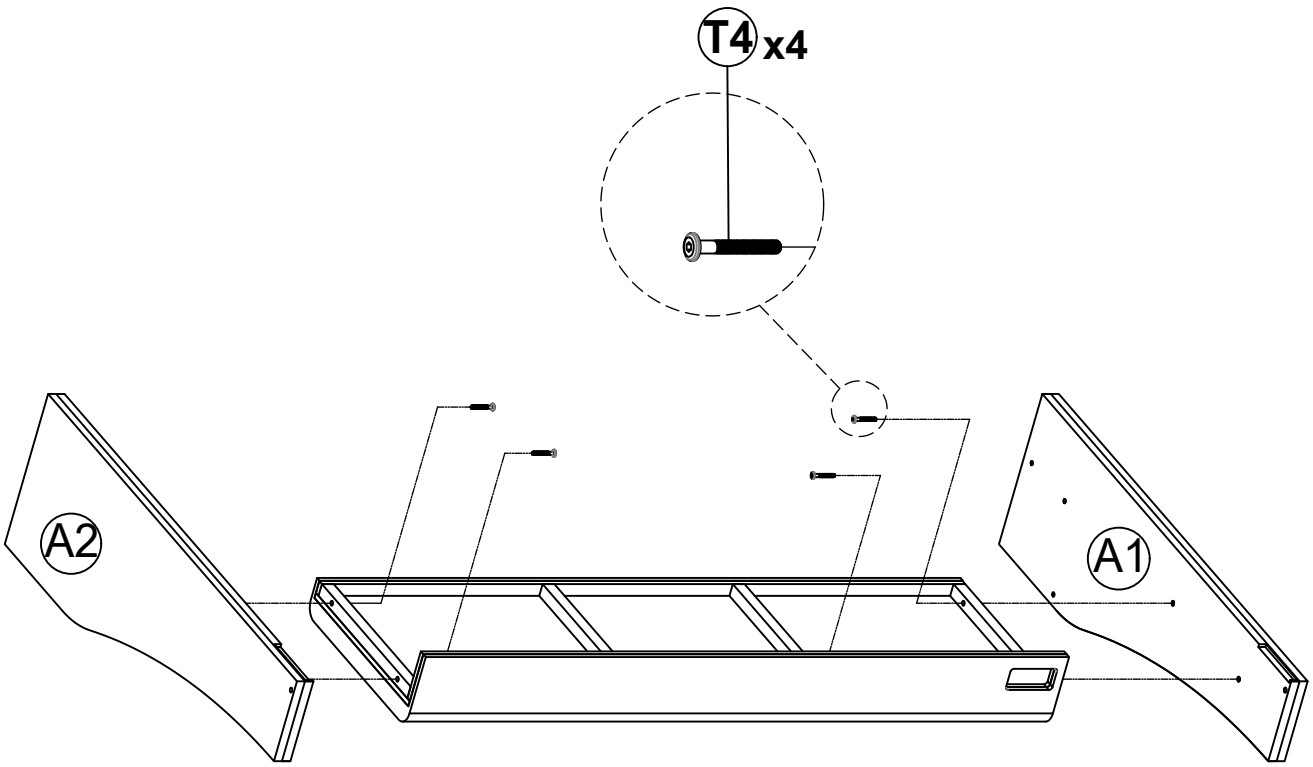

3.2

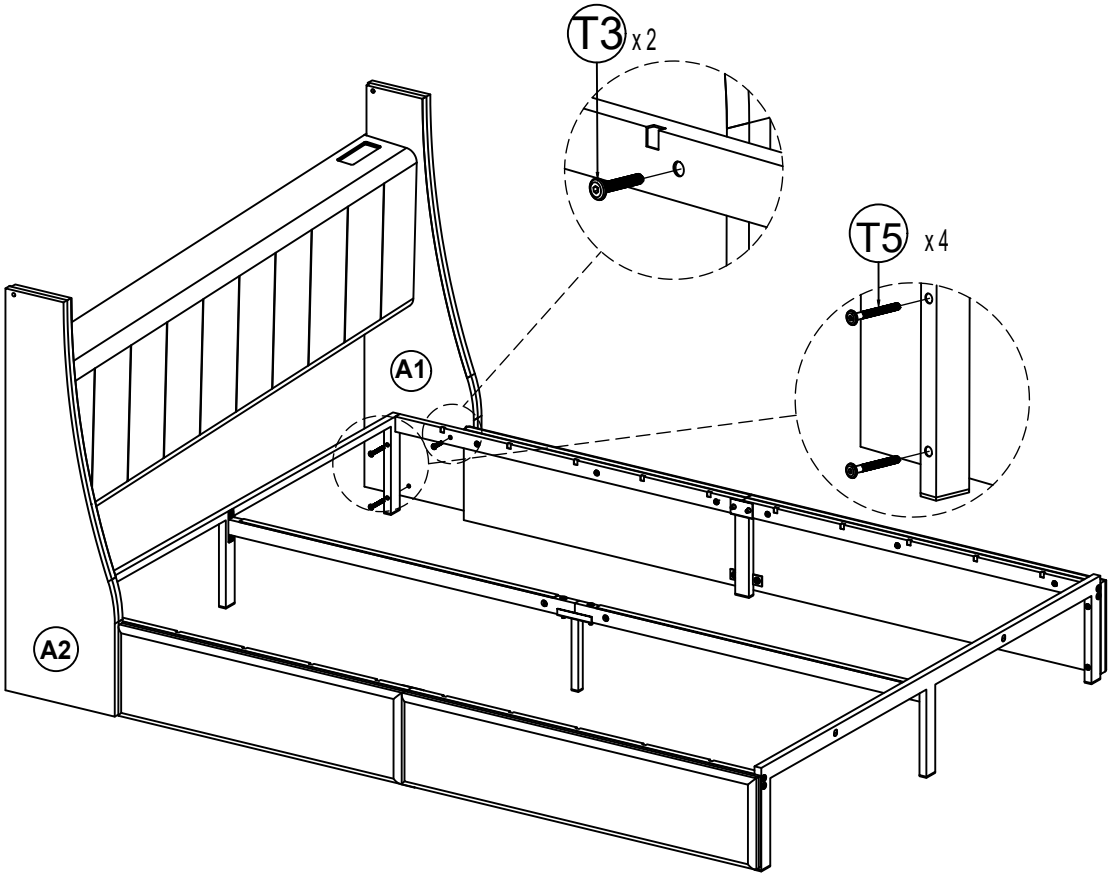

Step 4

4.1

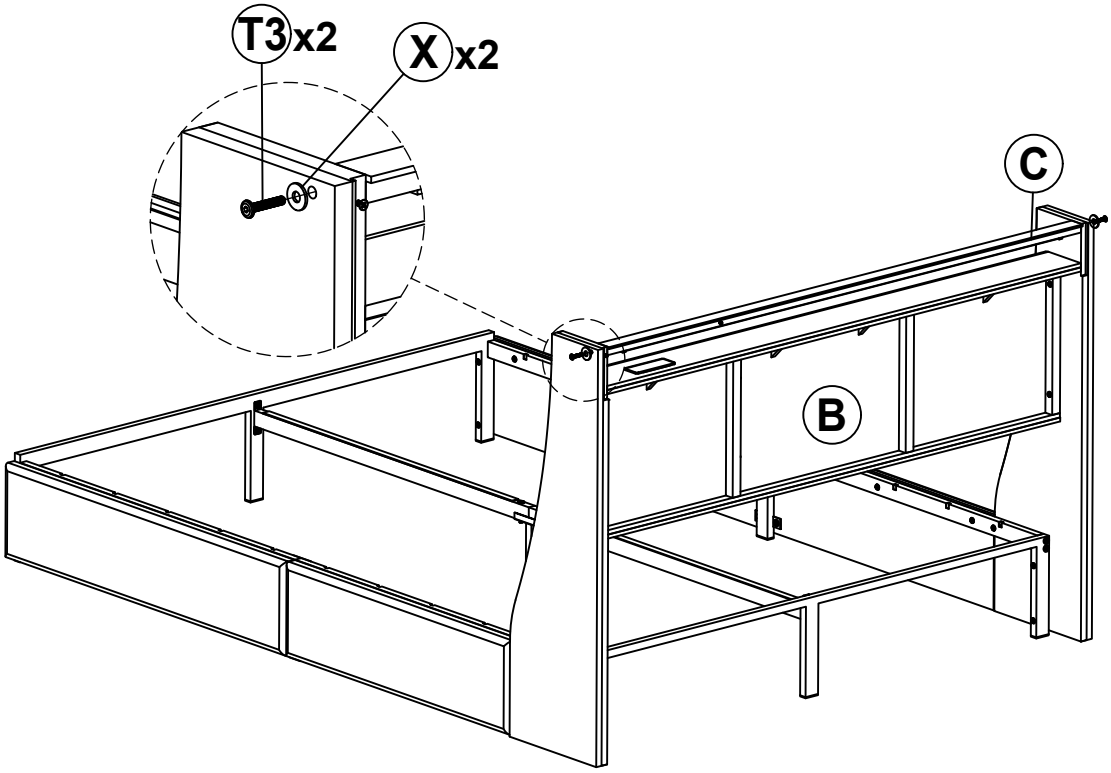

4.2

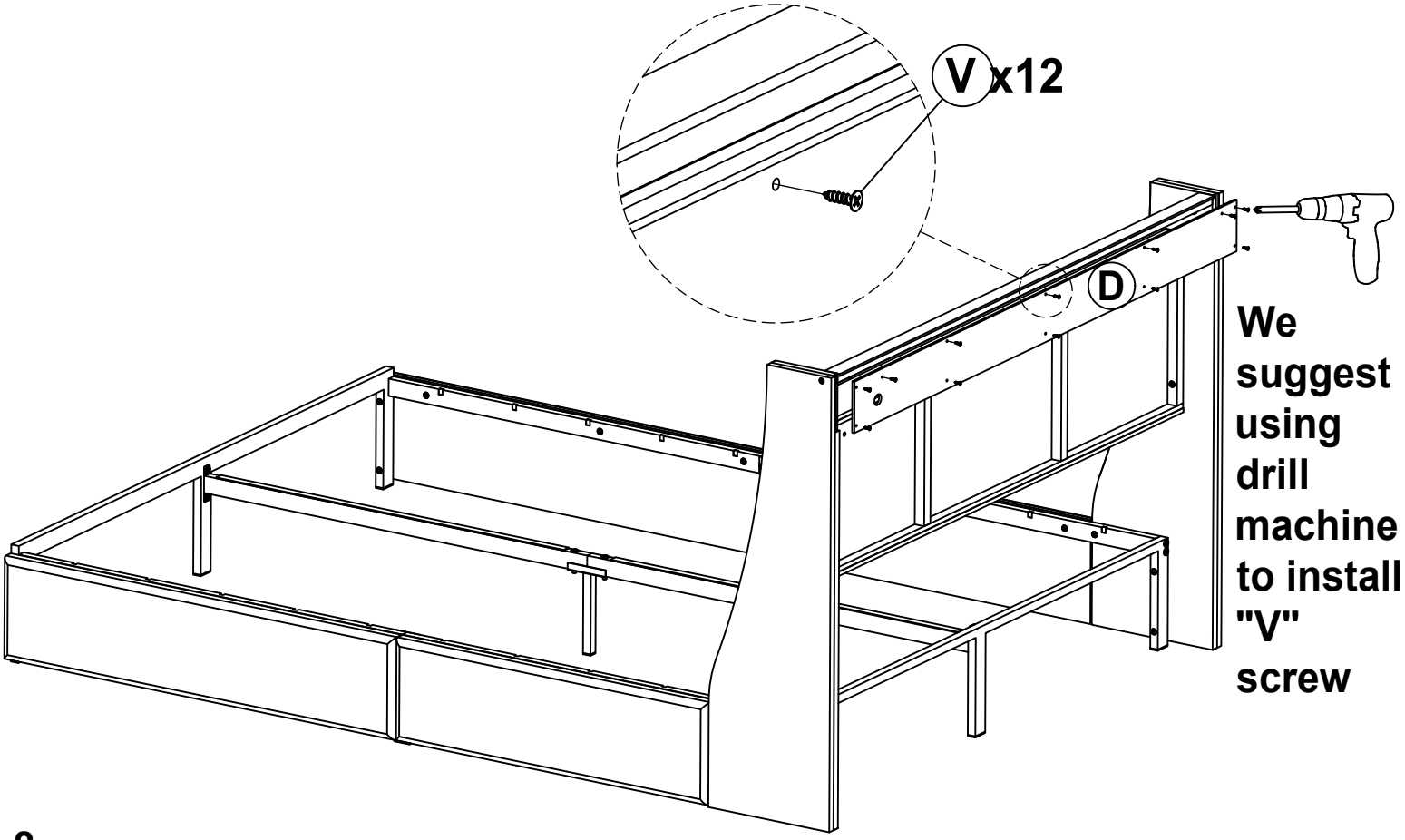

We suggest using drill machine to install "V" screw

5.1

Step 5

Tear off the double-sided adhesive tape before place the mattress.

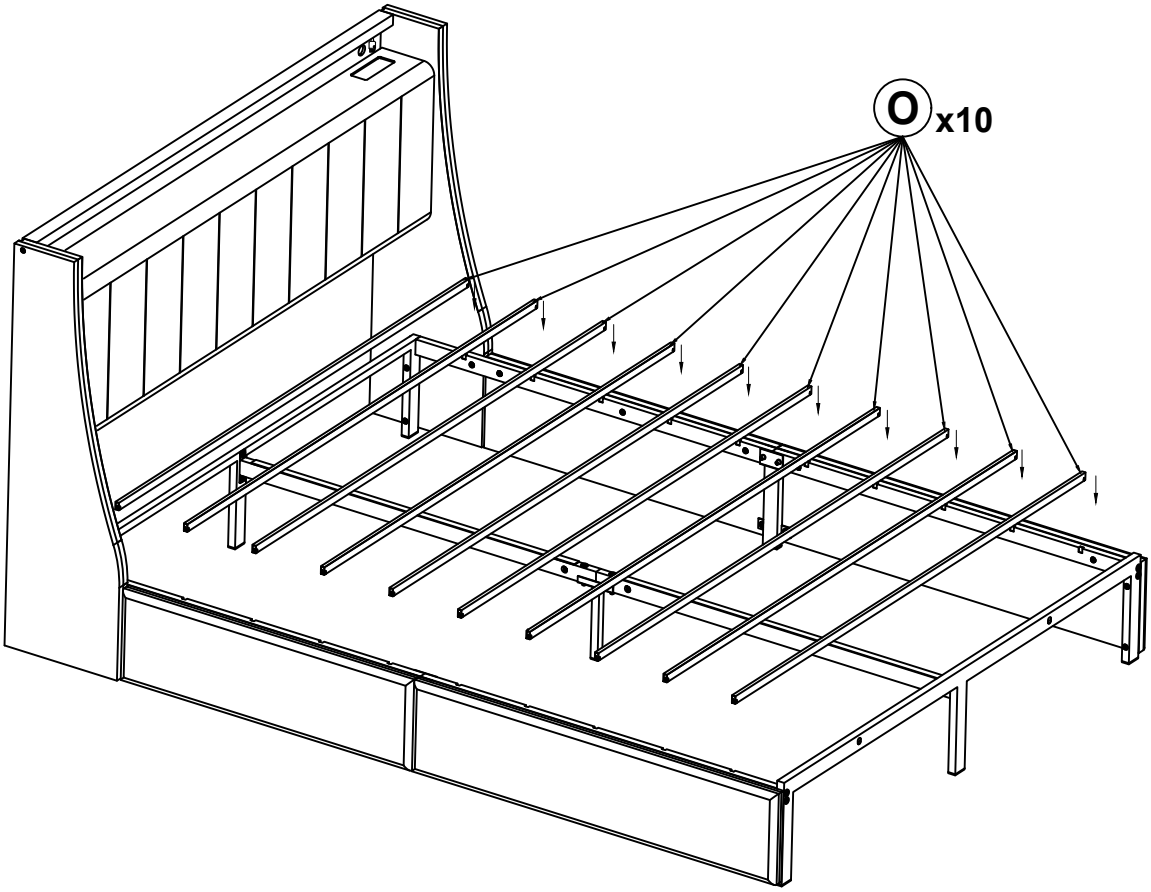

Step 6

Wheel mounting position

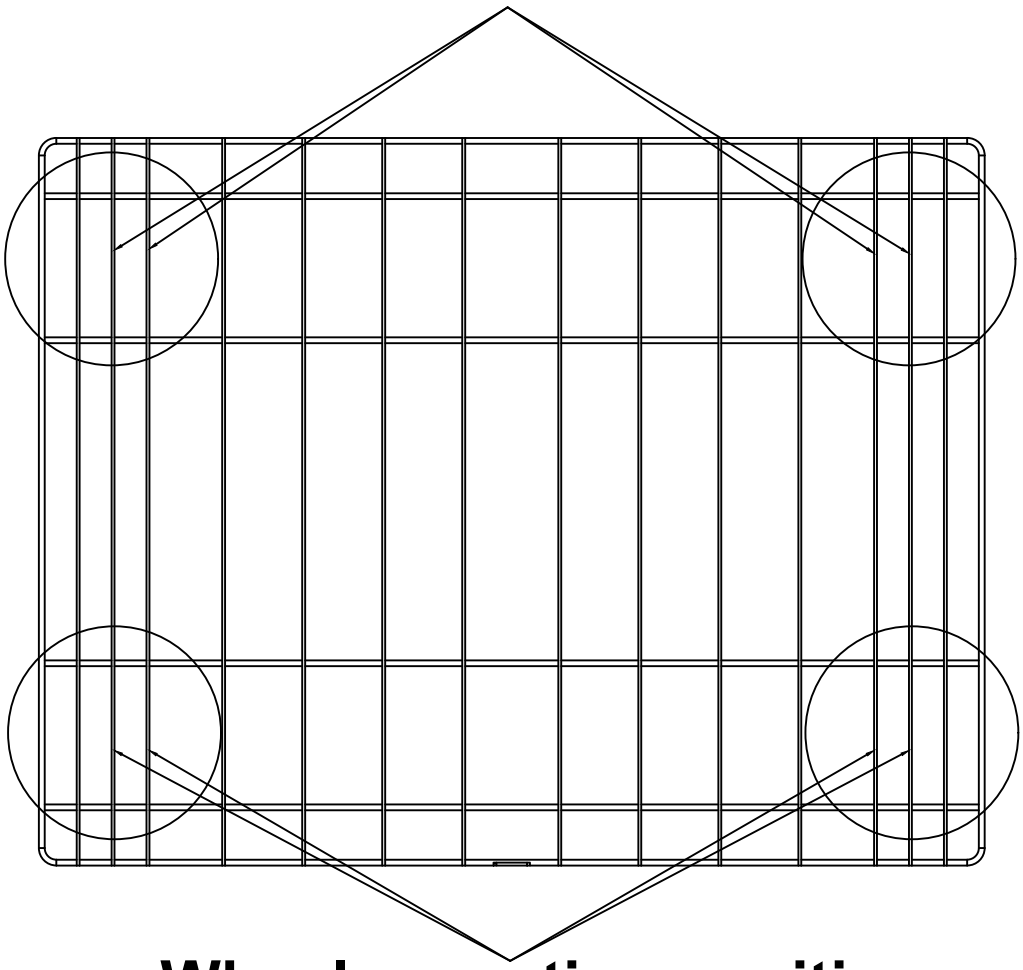

Wheel mounting position

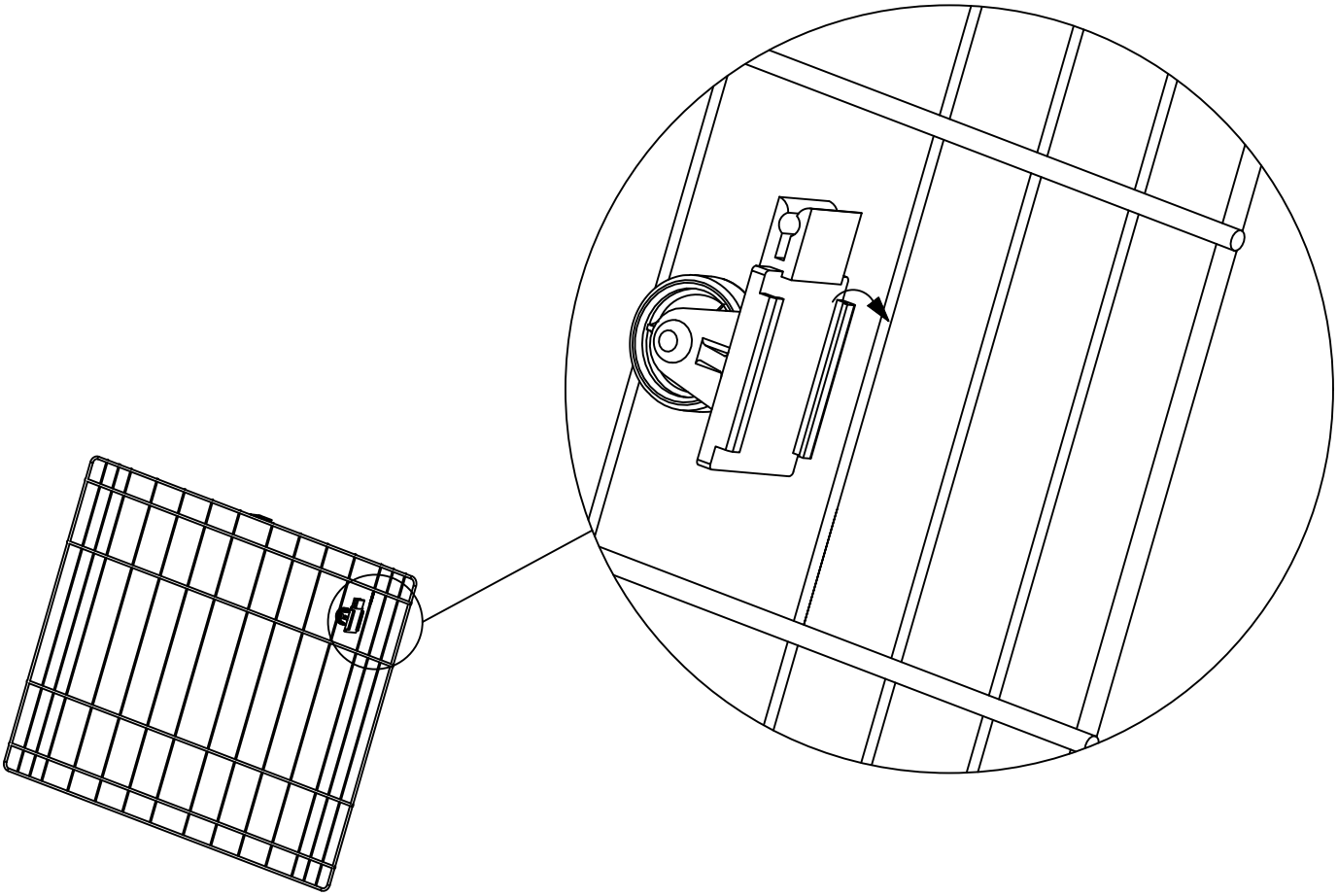

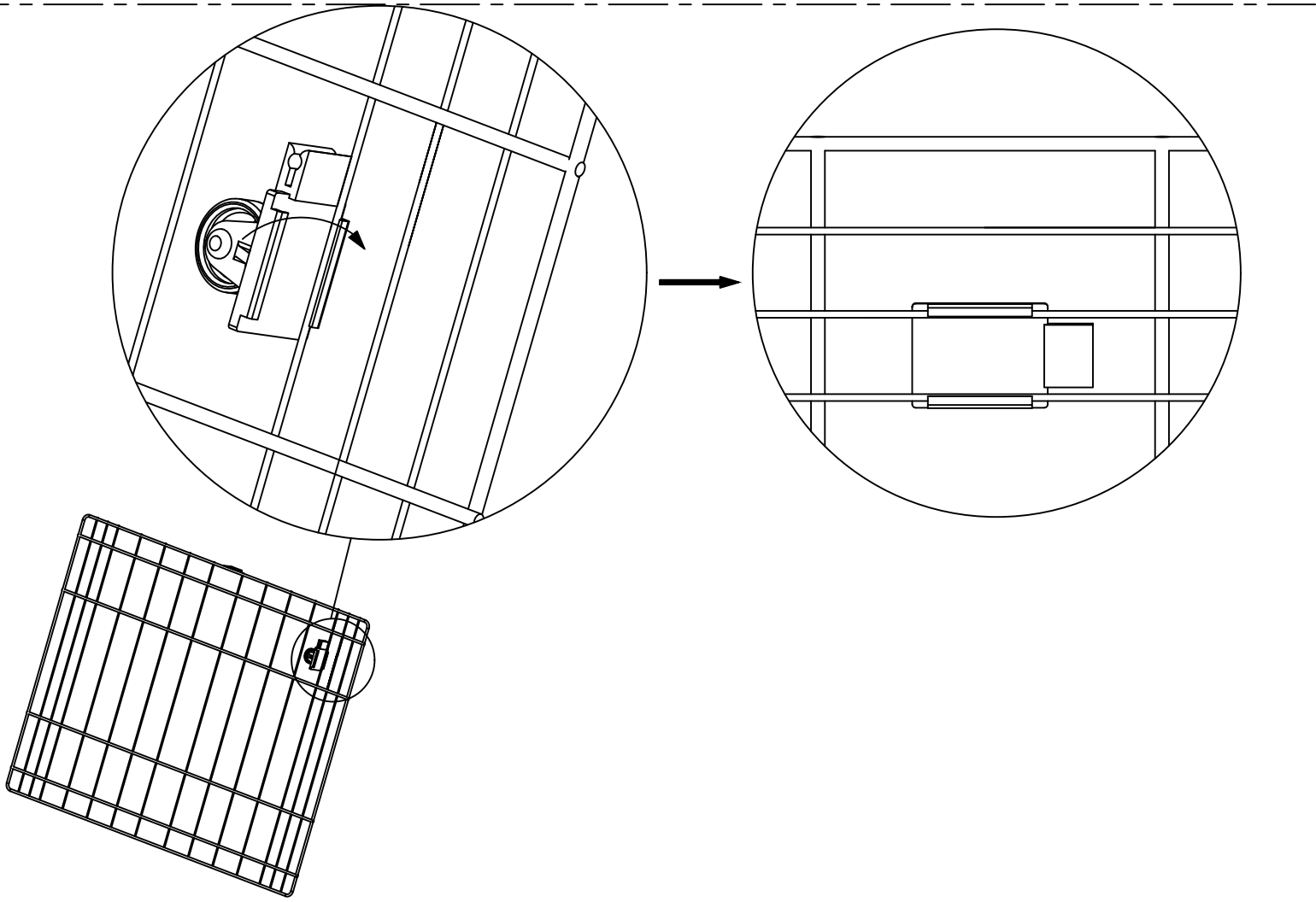

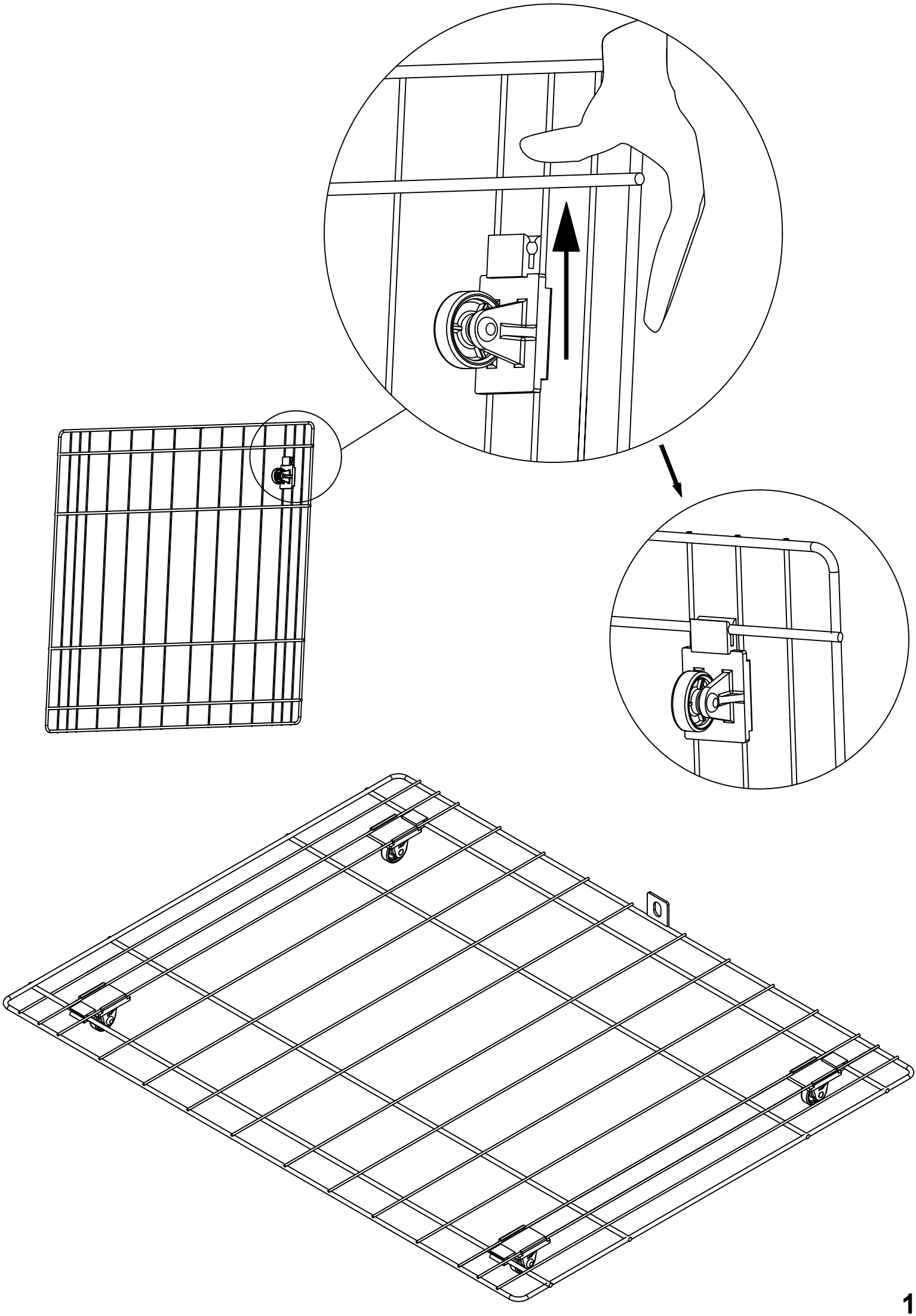

Detailed assembly instructions Q1

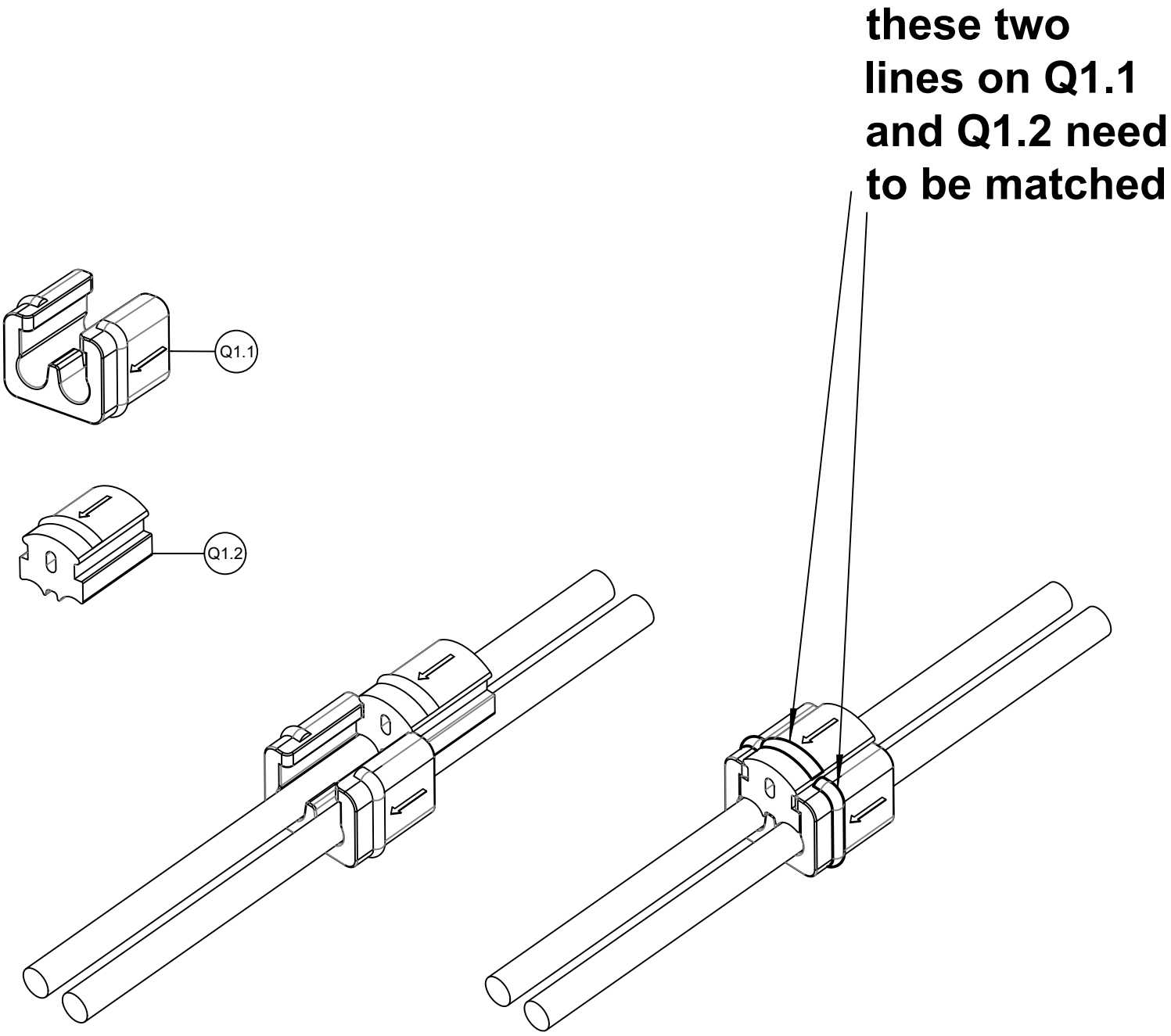

Step 7

7.1

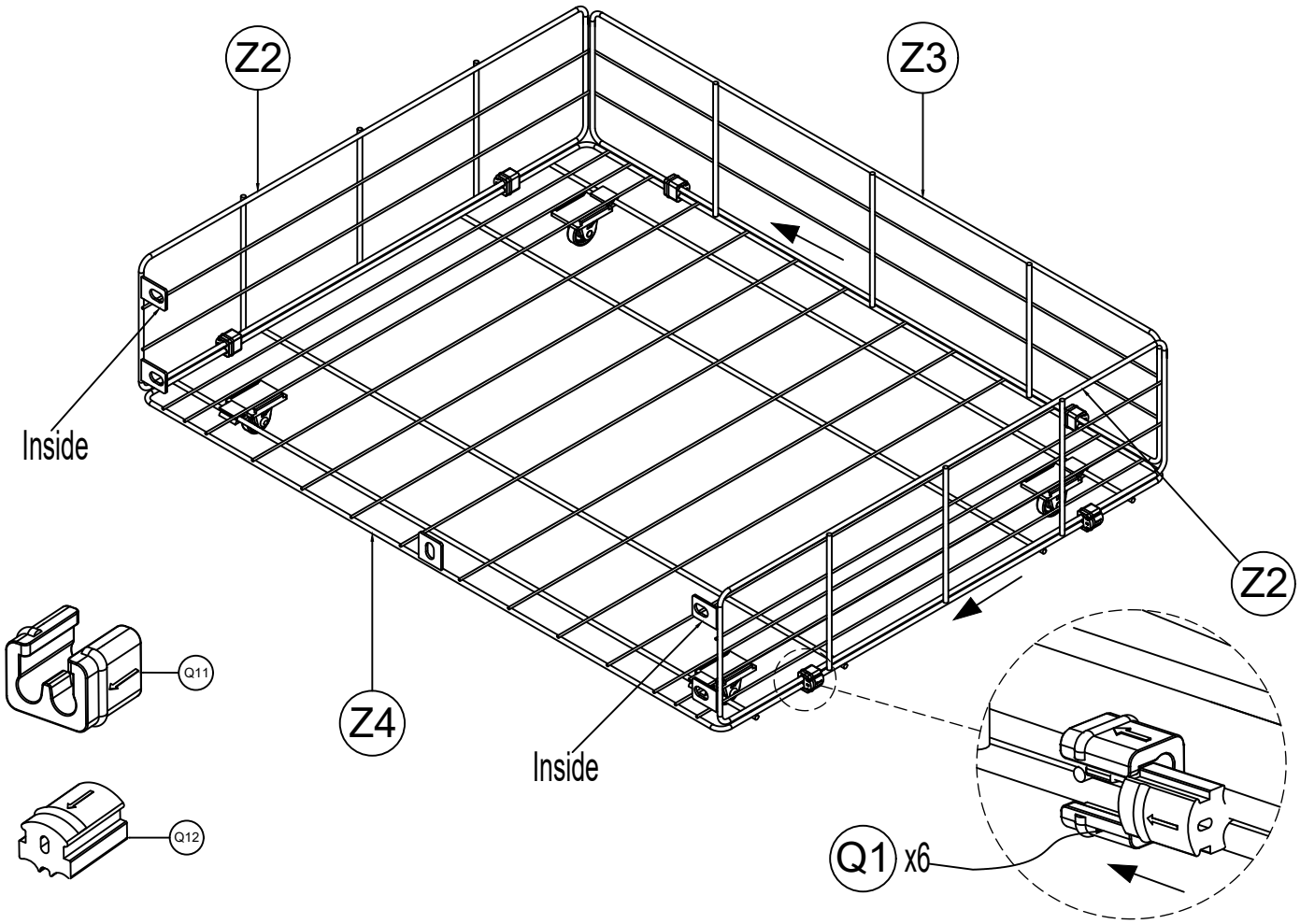

7.2

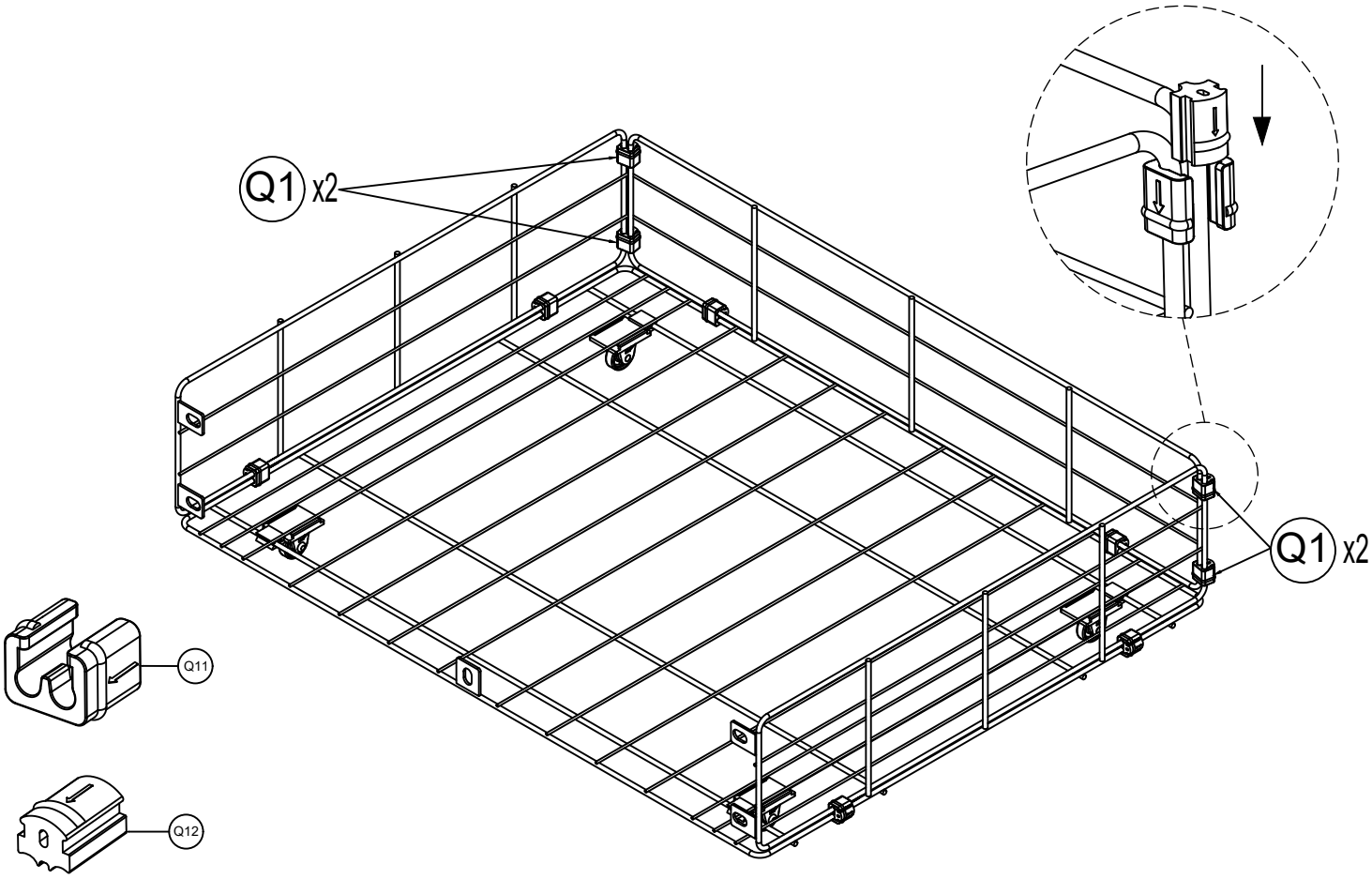

8.1

Step 8

T1 x2

Z8 x1

T1 x1

T1 x2

8.2

9.1

Step 9

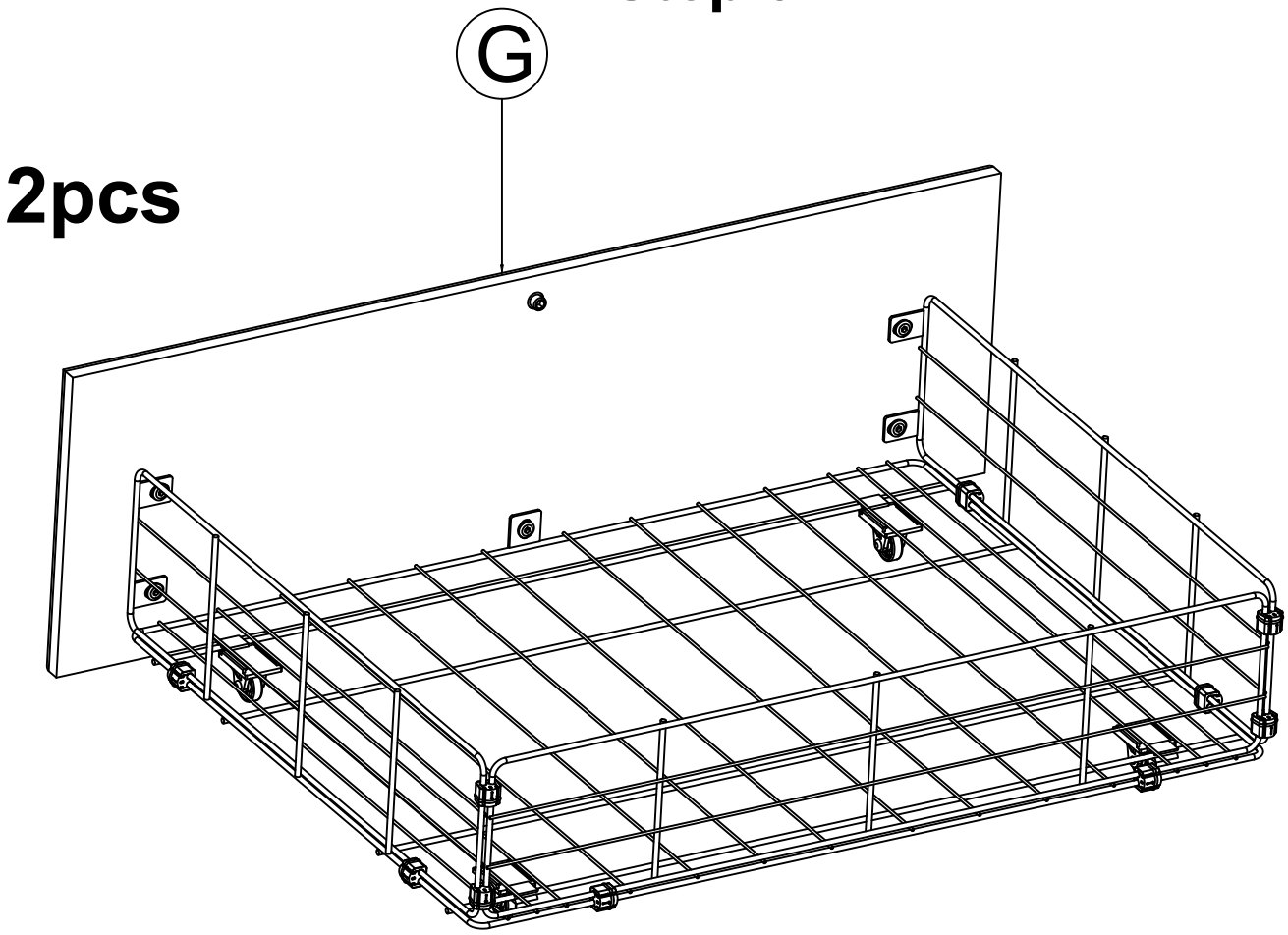
G
2pcs

9.2

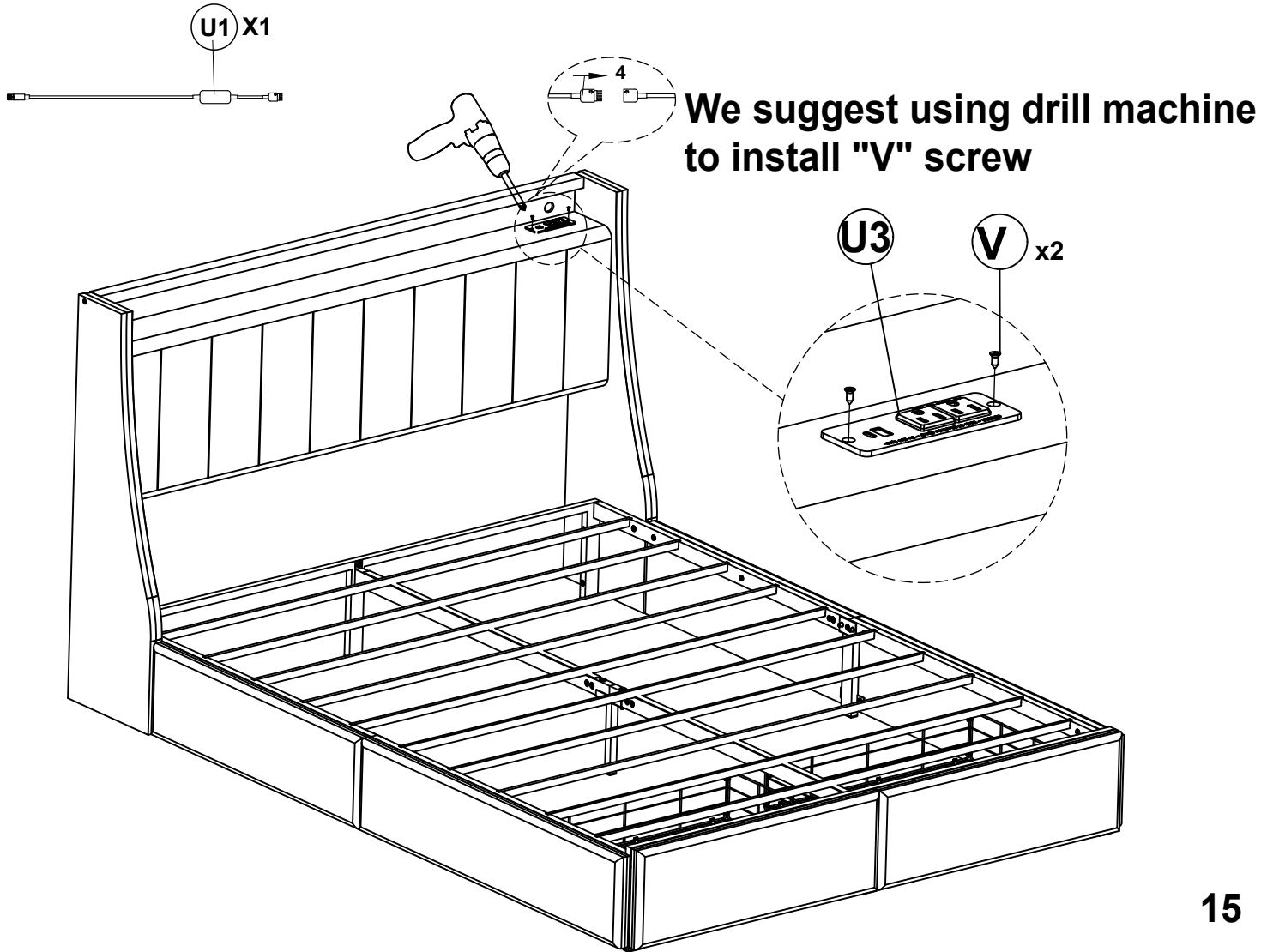
U1 X1
4
We suggest using drill machine to install "V" screw
U3
V x2

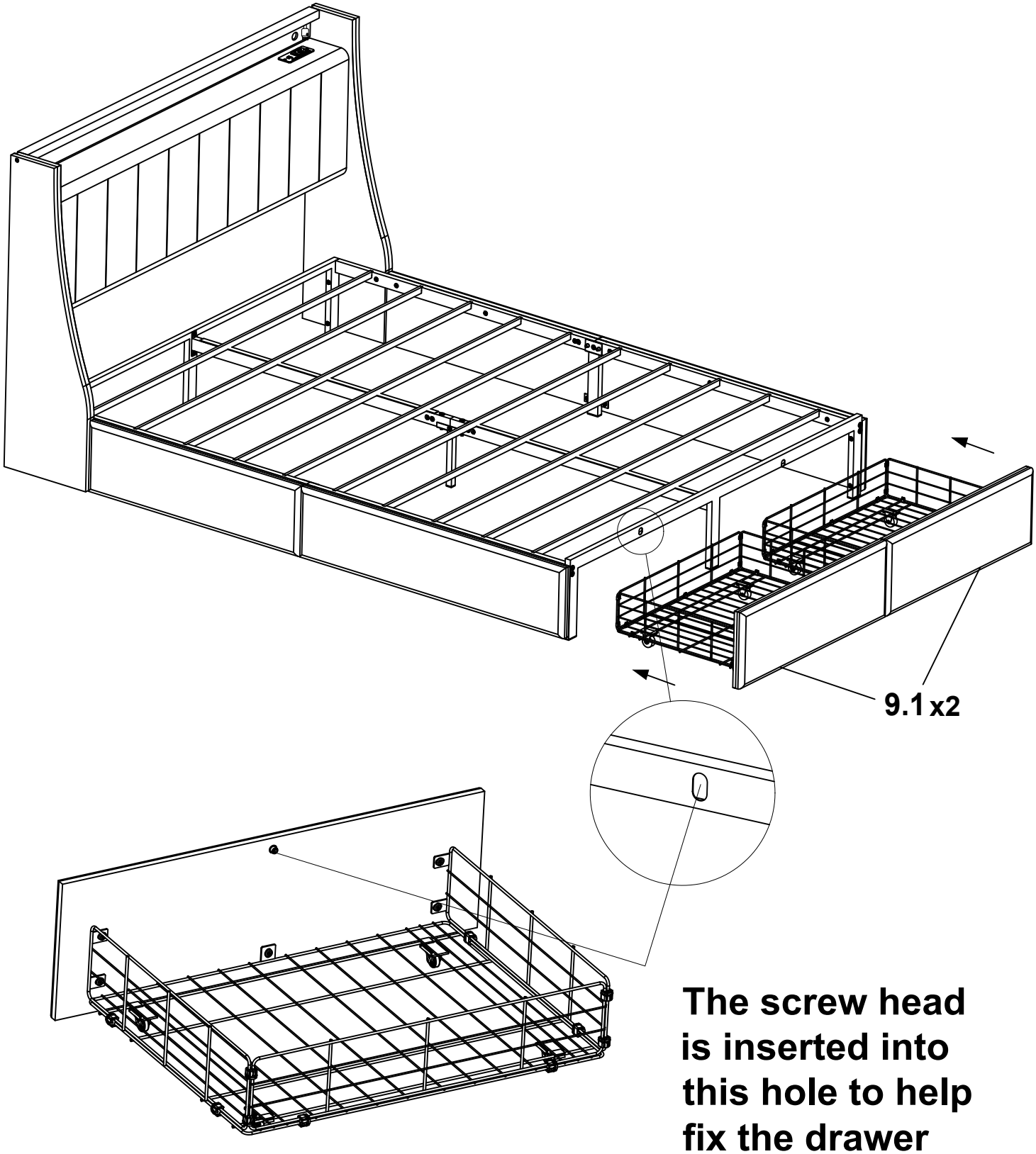
9.1 x2
The screw head is inserted into this hole to help fix the drawer
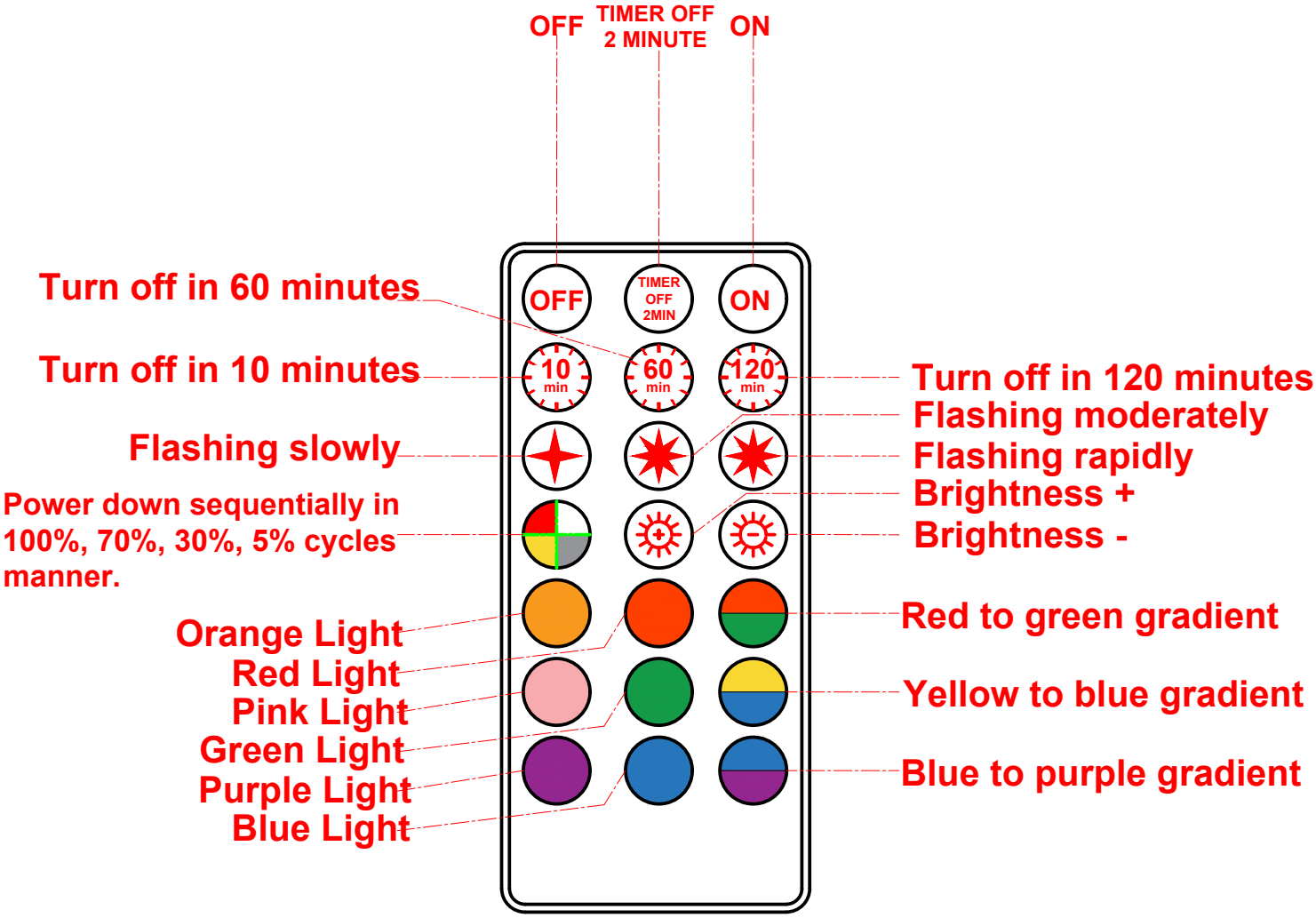
REMOTE CONTROL