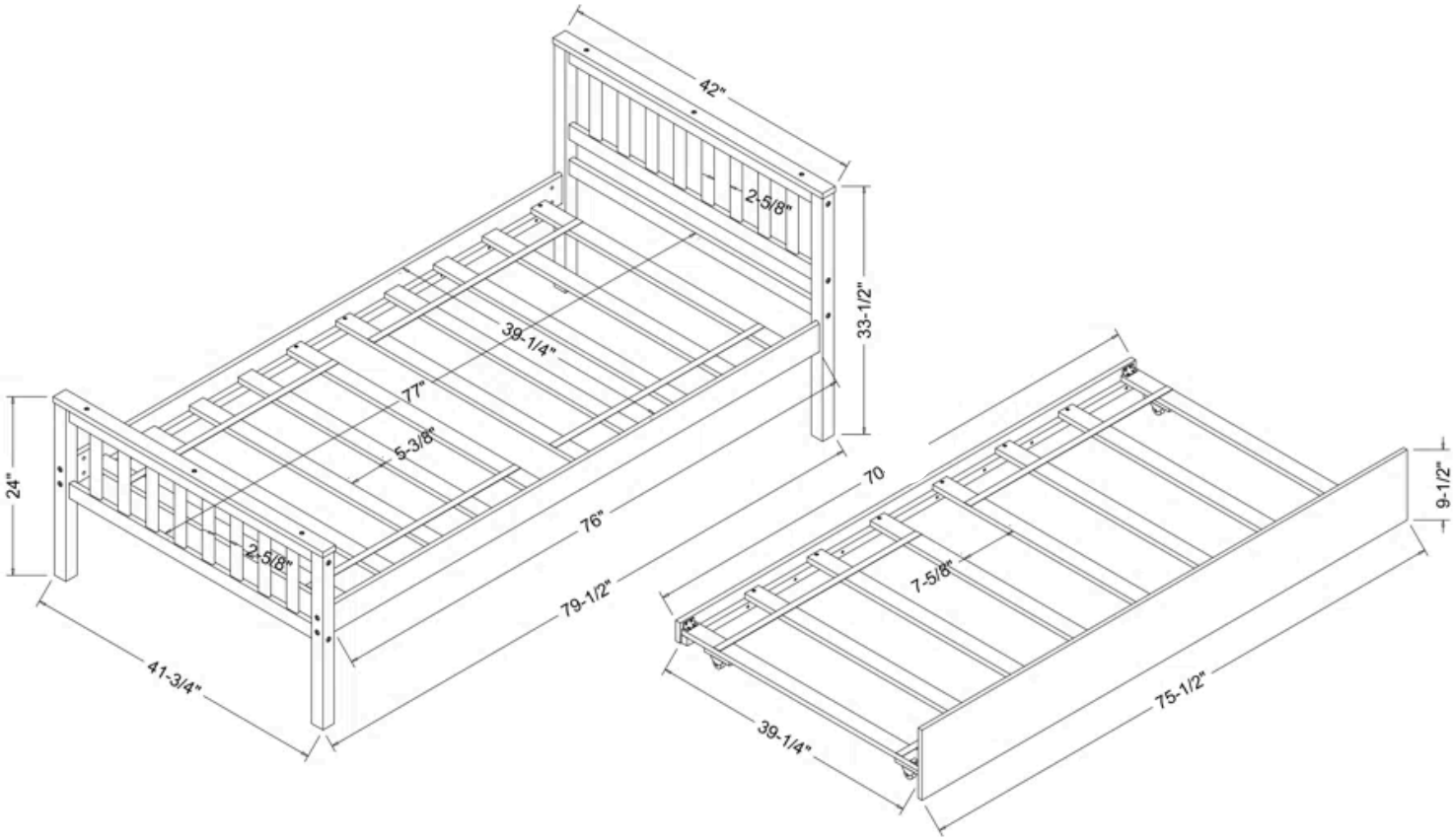
42"
2-5/8"
33-1/2"
39-1/4"
77"
5-3/8"
24"
2-5/8"
76"
70
79-1/2"
41-3/4"
9-1/2"
7-5/8"
75-1/2"
39-1/4"