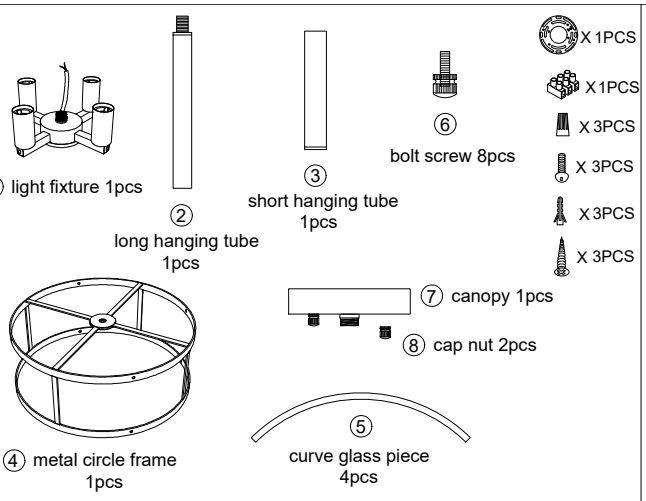

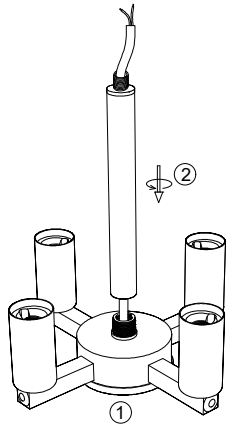

1.Let the wire of the fixture ① go through the long hanging tube ②, rotate to fix the tube ② to the fixture ①.

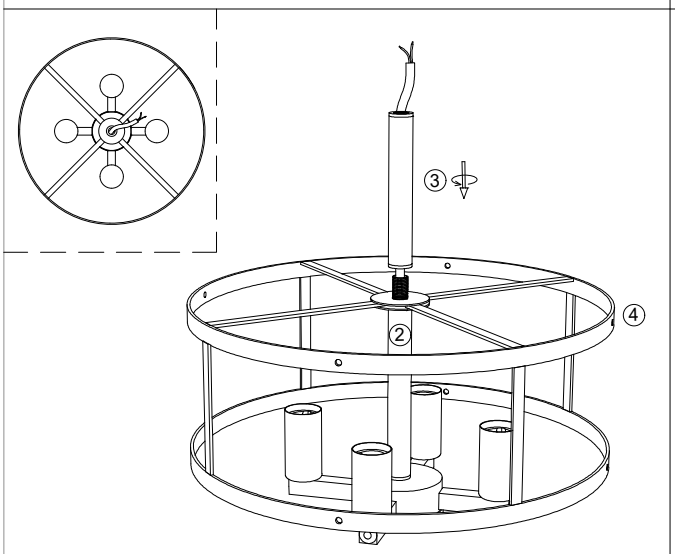

2.Let the wire go through the metal frame ④ and short hanging tube ③, rotate to fix both to the fixture ①.

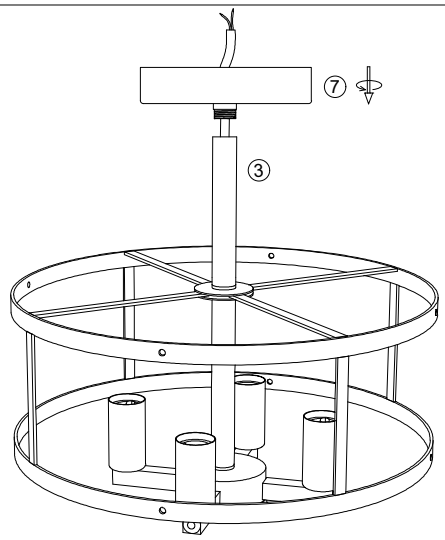

3.Rotate to install the canopy ⑦ to the fixture.

Should be carefully when install the glass piece to avoid damage or scratching !!!

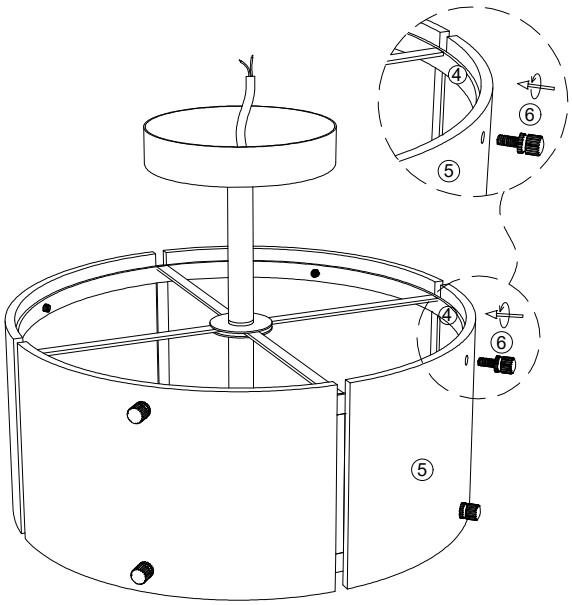

4.Install the glass piece ⑤ to the metal frame ④ with bolt screw ⑥.

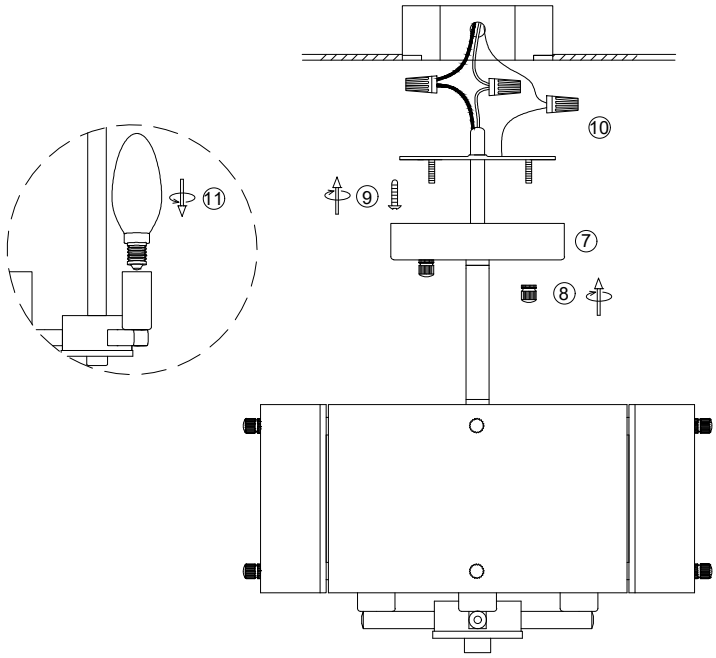

5.Install the bracket to the ceiling junction box with screw ⑨.
6.Connect the wire to your home line with cap connector ⑩.
7.Install the fixture to the bracket with cap nut ⑧.
8.Install the bulb ⑪.

Please read carefully before installation!!!
Note : Please make sure that the electricity is powered off during installation !
Only a professional electrician should install this kind of product !