ALLURE BRILLIANT
Single-lever Bath Mixer 1/2"
MODEL # 23119000

Pure Freude an Wasser

GROHE

GROHE America, Inc | 200 North Gary Avenue, Suite G, Roselle, IL 60172
Phone: +1 (800) 444-7643 | Fax: +1 (800) 225-2778 | us-customerservice@grohe.com

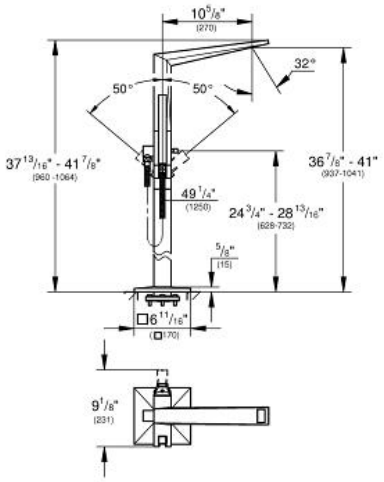

ADA

Product Description:
Single-lever Bath Mixer 1/2"

Standard Specification:
- Floor standing tub filler
- Requires Rough-In Set (29 038 001) (sold separately)
- **GROHE SilkMove®** ceramic cartridge
- **GROHE StarLight®** finish
- Automatic diverter: bath/shower
- Spout with integrated flow control
- 10 5/8" spout reach
- 1/2" Integrated non-return valve in the shower outlet
- With shower holder
- Hand shower Euphoria Cube+
- **Protected against backflow**

Applicable Codes & Standards:
- Energy Policy Act of 1992
- ASME A112.18.1/CSA B125.1
- US Federal and State material regulations
- ICC/ANSI A117.1
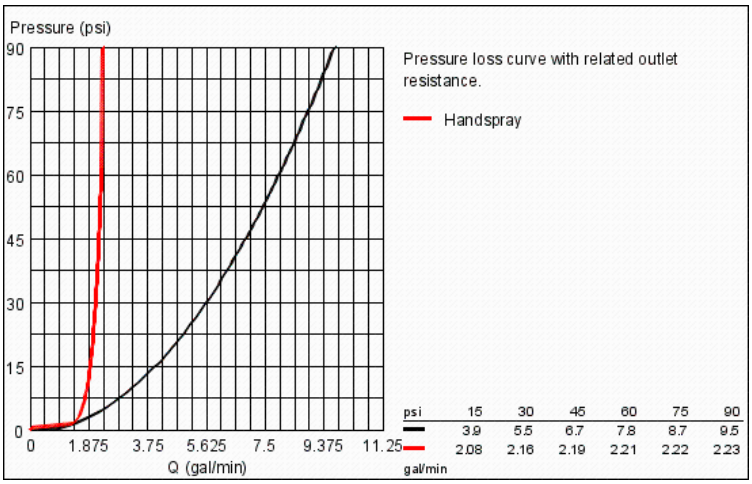
Color:
❑ 23119000 000 chrome