TOP VIEW

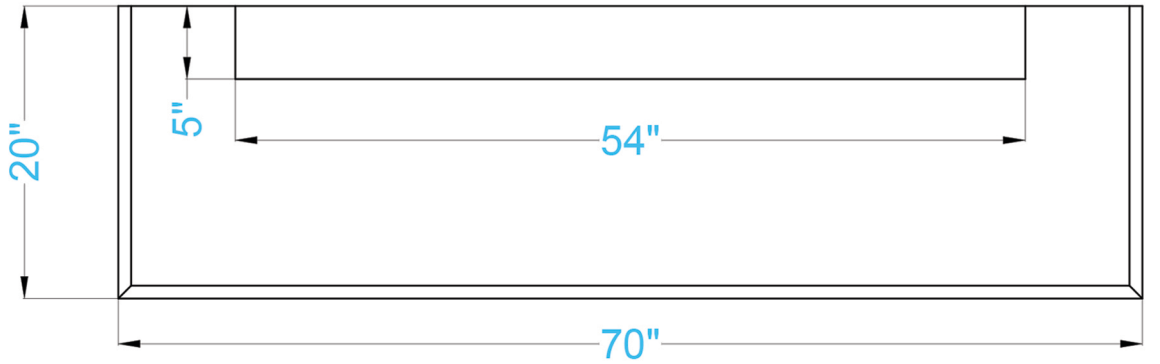

FRONT VIEW

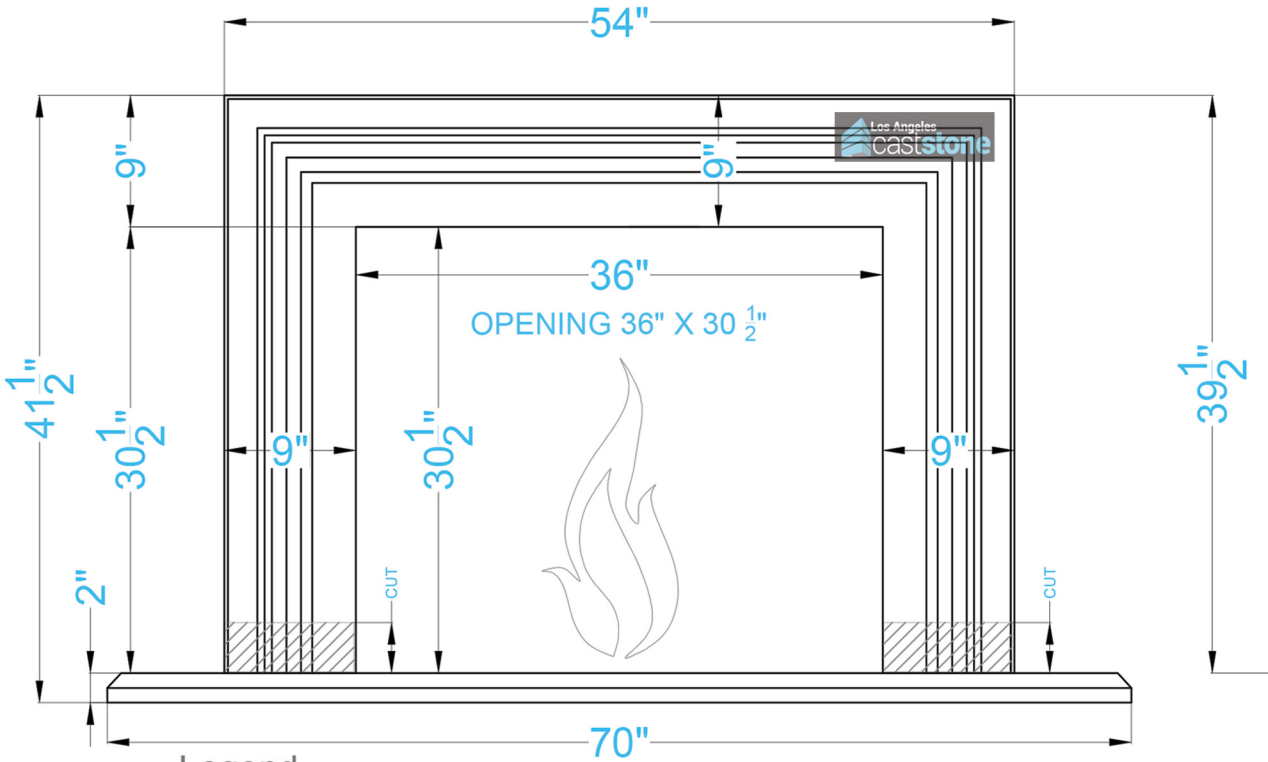

SIDE VIEW

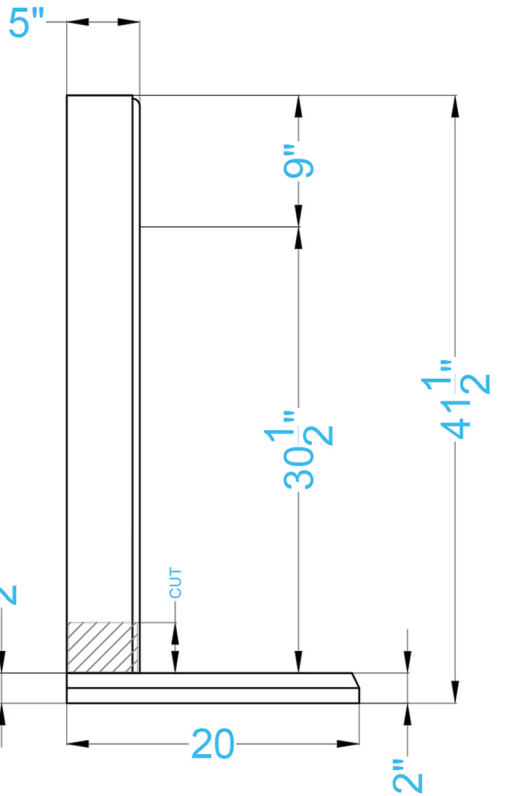

Legend

FS-39

-Adjustable part (cut to fit)