GETPRO®

626-679-3588
service@getprohome.com
www.getprohome.com
162 Atlantic St, Pomona, CA 91768

INSTALLATION MANUAL

SHOWER DOOR

KTL 48/54/60

AVAILABLE SIZES

Color Option: Brushed Nickel / Matte Black

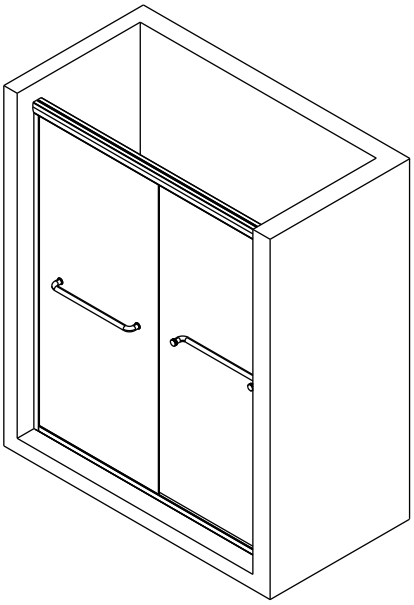

56-60” W x 72” H

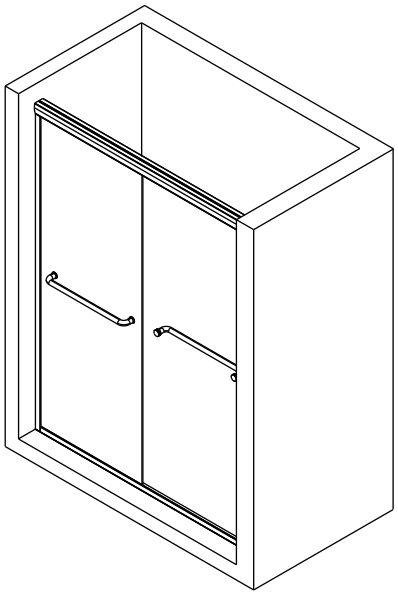

50-54” W x 72” H

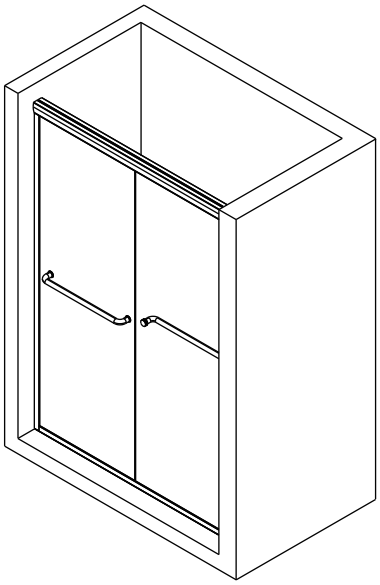

44-48” W x 72” H

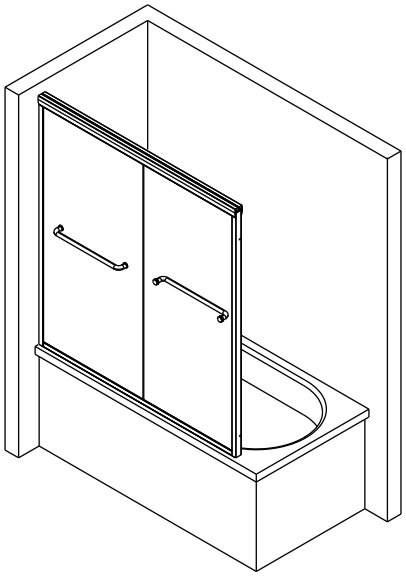

56-60” W x 58” H

THANK YOU!

Dear Valued Customer,

Thanks to your kind support of GETPRO, we hope our product can improve the quality of your life.

As our valued customer, your comments and opinions are very important to us. If you have any concerns, questions, or comments, we hope that you will bring them to our attention.

Please keep the carton and packaging materials until your product is completely installed.

Feel free to contact us if you encounter any problems such as missing parts, or product defects during the installation process. We are happy to provide you with the most sincere service.

Sincerely,
Service Team

Please read all instructions carefully before installation.

Due to the complexity of the installation process, professional plumbers are recommended.

Required Tools

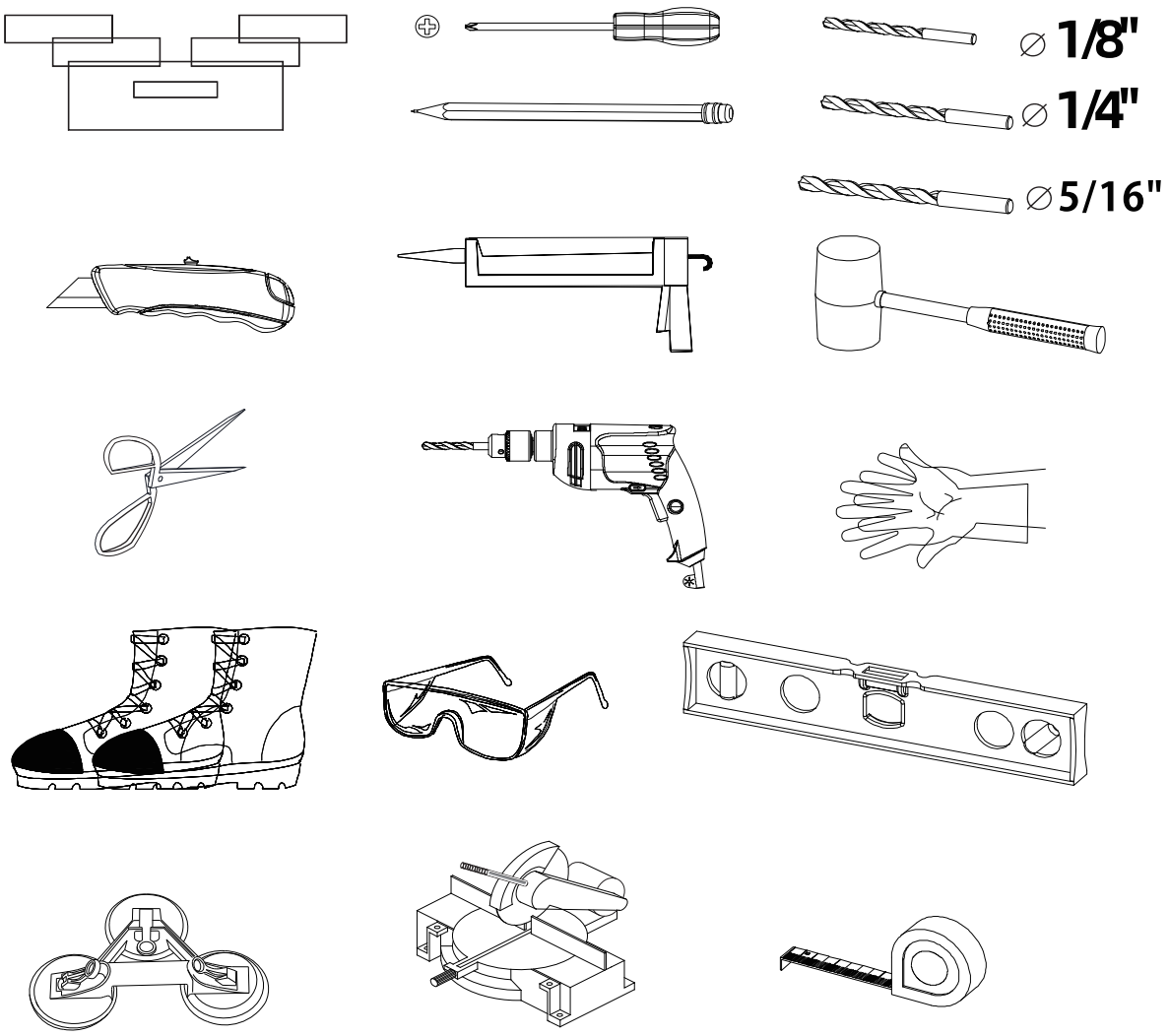

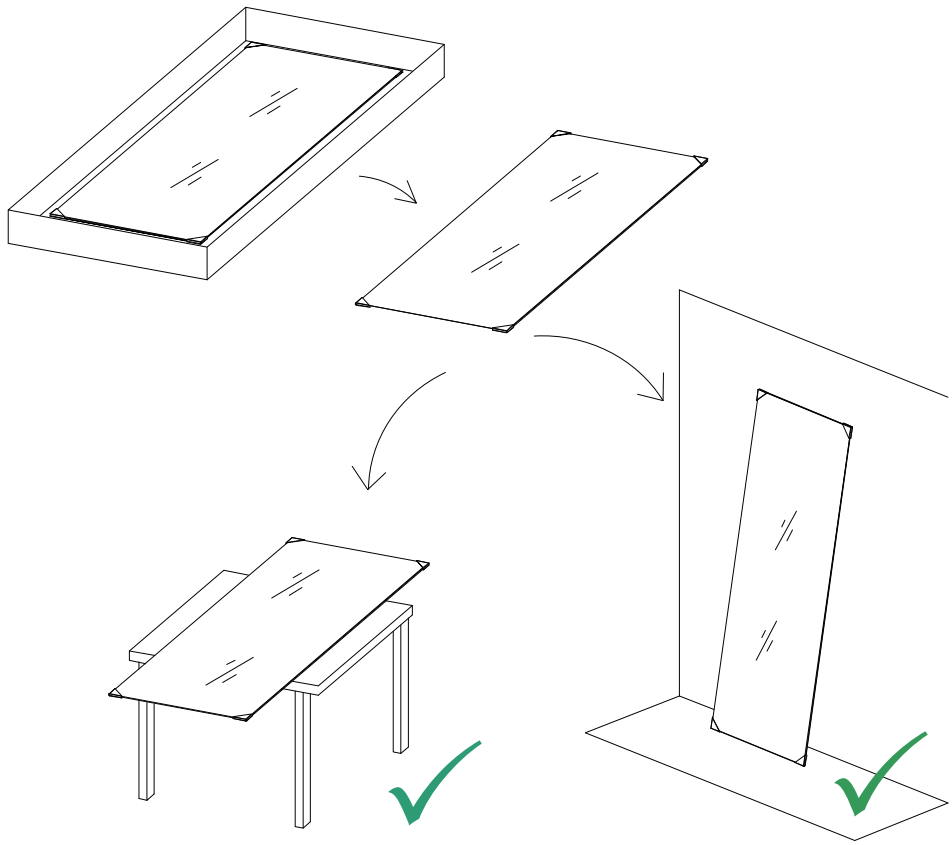

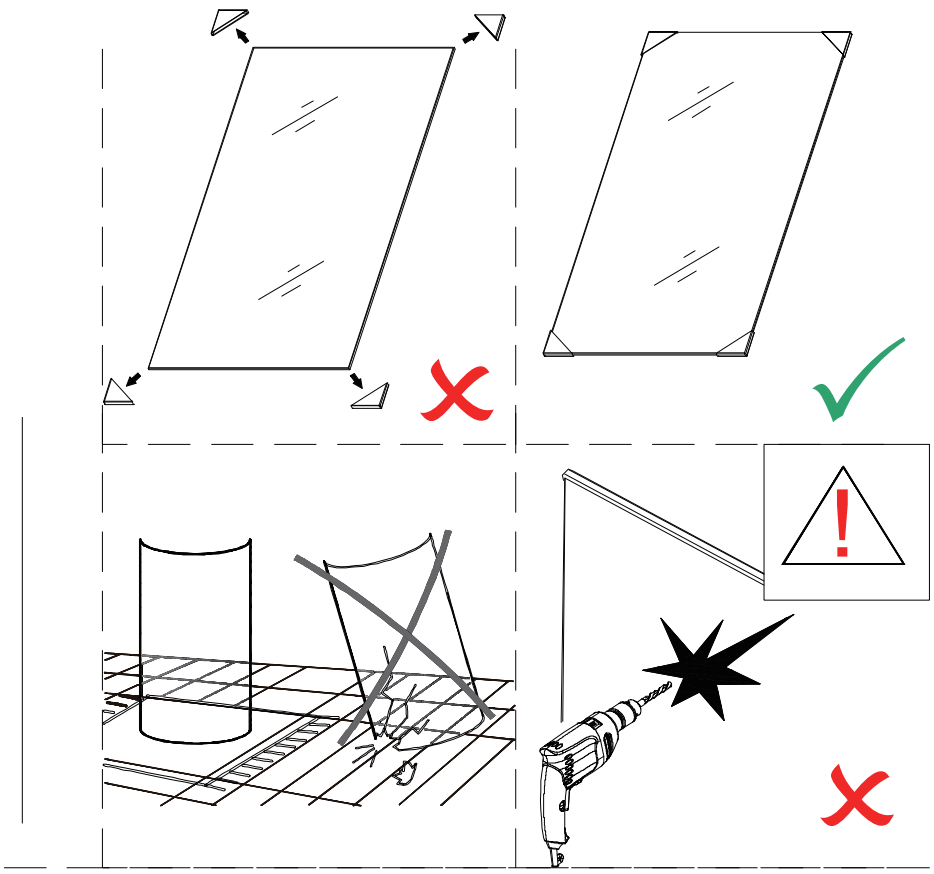

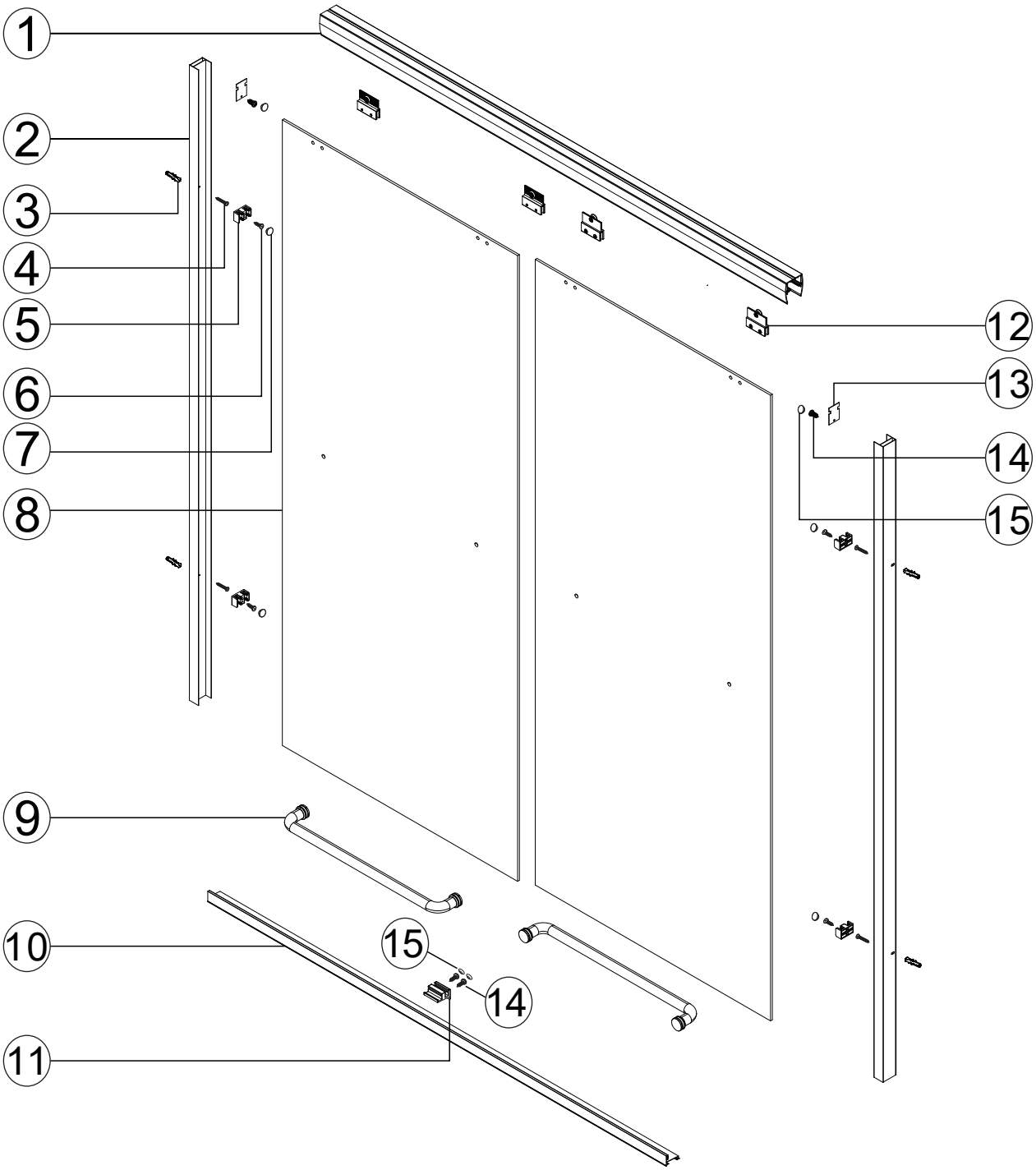

NO.	Picture	Qty	NO.	Picture	Qty	NO.	Picture	Qty	NO.	Picture	Qty	NO.	Picture	Qty
1		1	2		1	3		4	4	Ø 3/16"D x 1-9/16"L	4	5		4
6	Ø 3/16"D x 5/8"L	5	7		4	8		2	9		2	10		1
11		1	12		4	13		2	14	Ø 3/16"D x 5/16"L	5	15		4

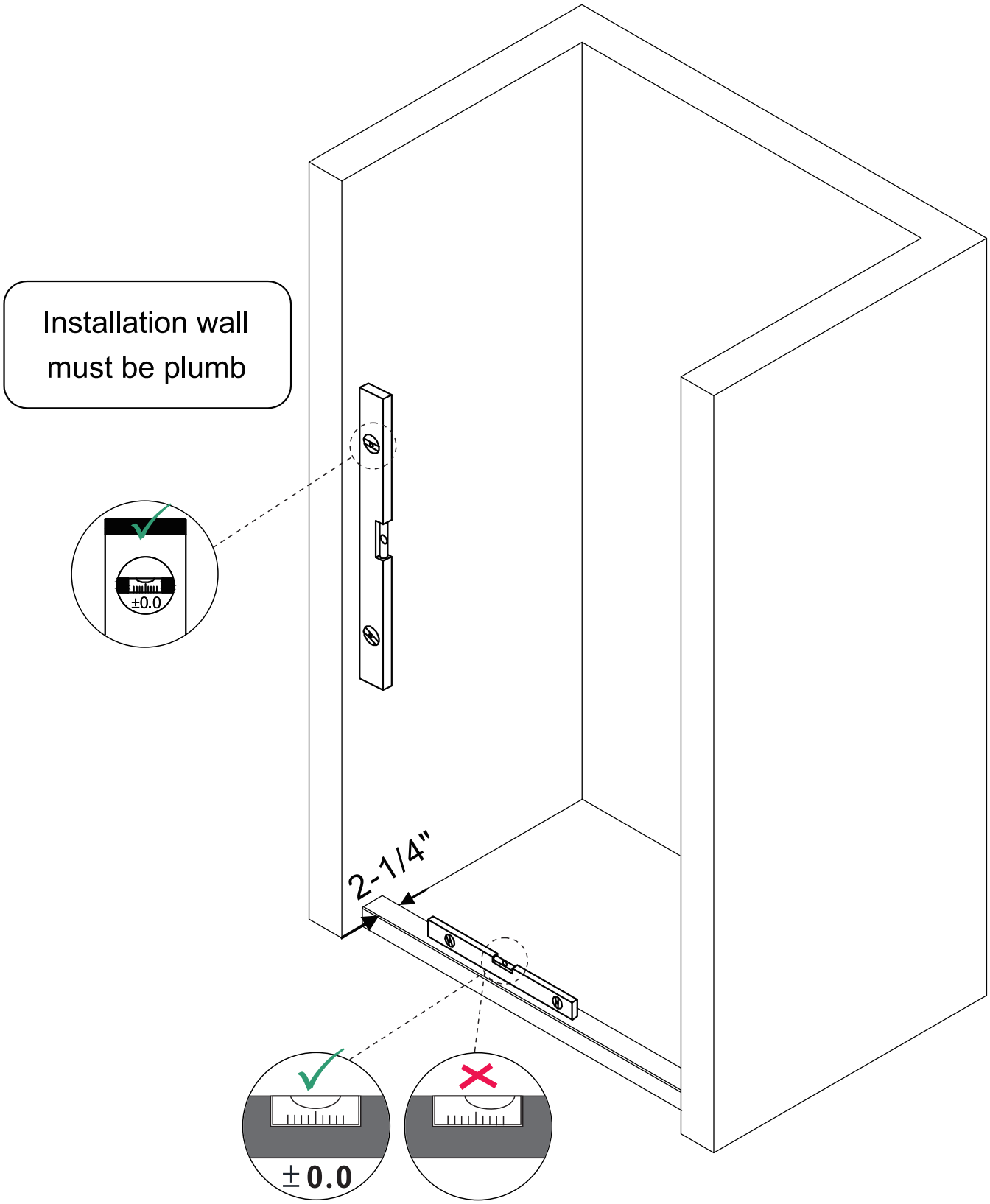
Installation wall must be plumb
±0.0
2-1/4"
±0.0

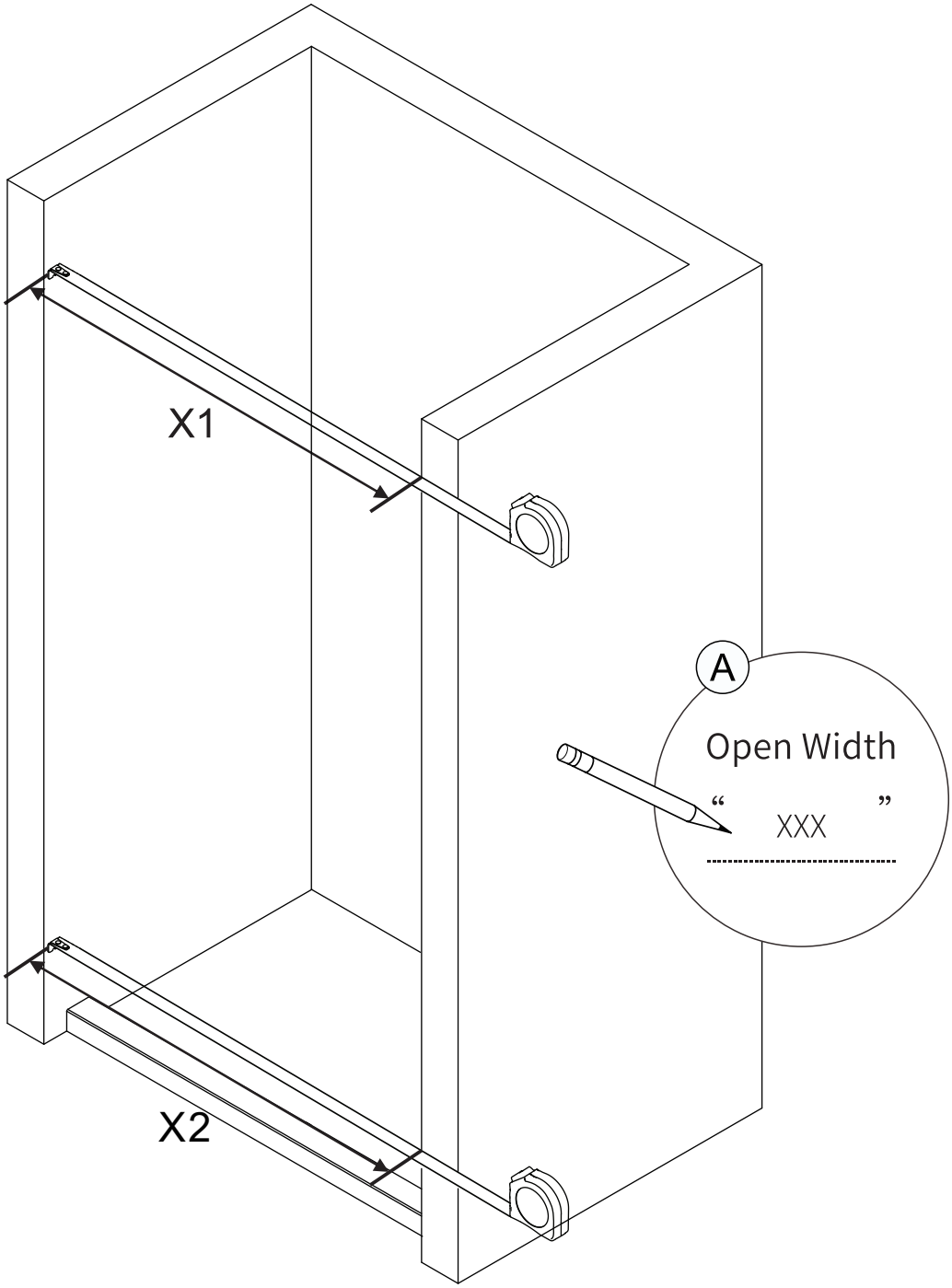

If the width of the upper and lower walls is inconsistent, please trim the wall

X1=X2

Step 1

Measure the Width of X1 and X2 Carefully Before Trim the Frames

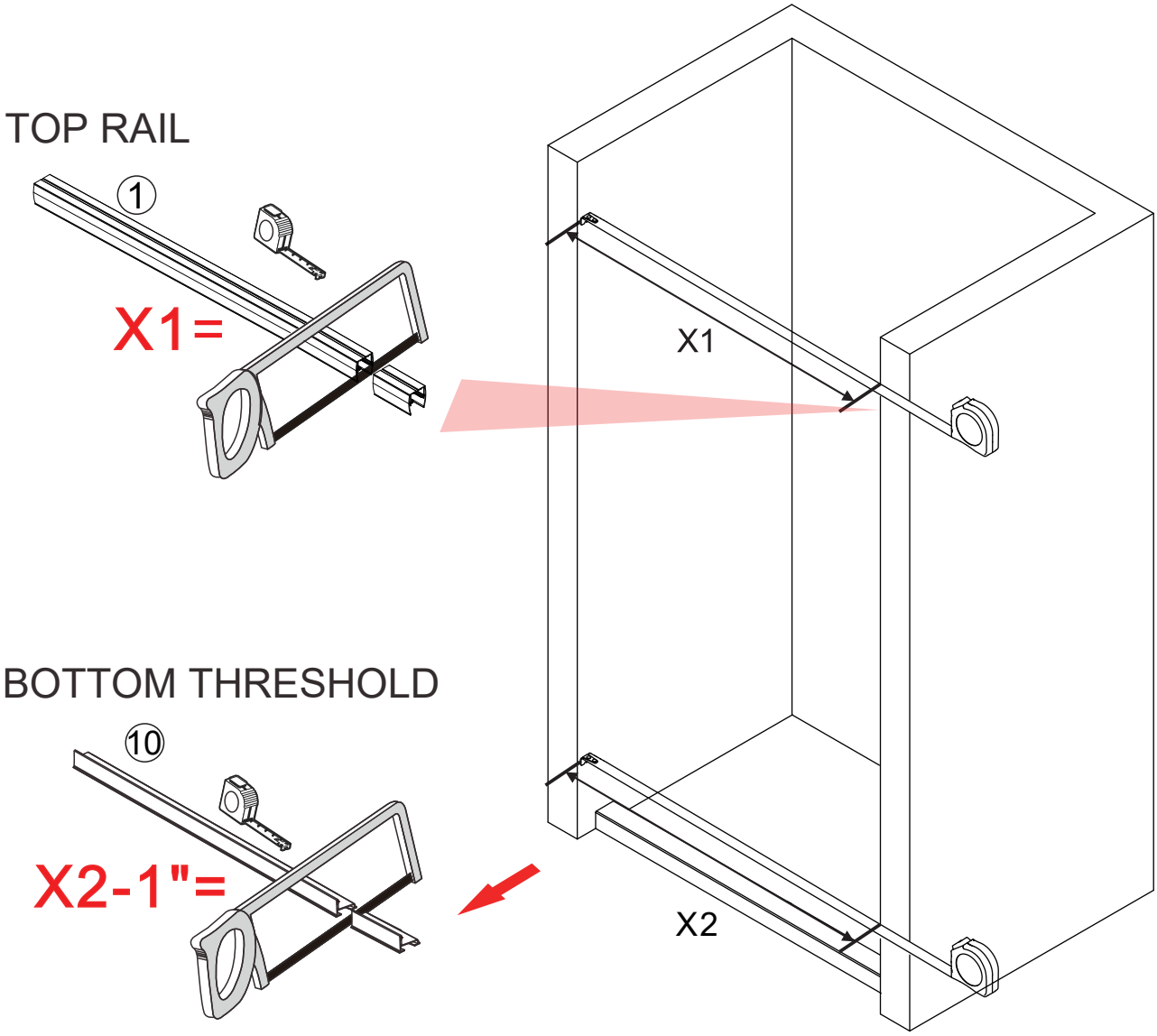

Threshold Width=X2-1inch

Step 2

NO.	Picture	Qty
10		1

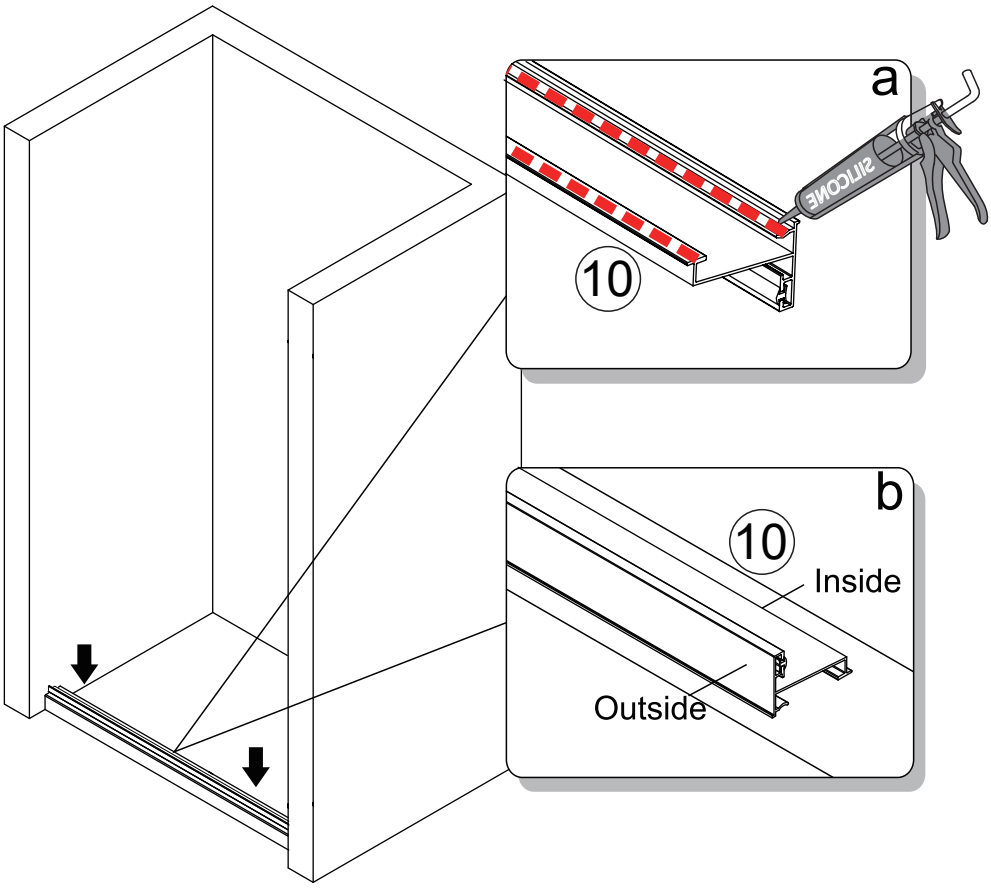

Step 3

NO.	Picture	Qty
2		2
3		4

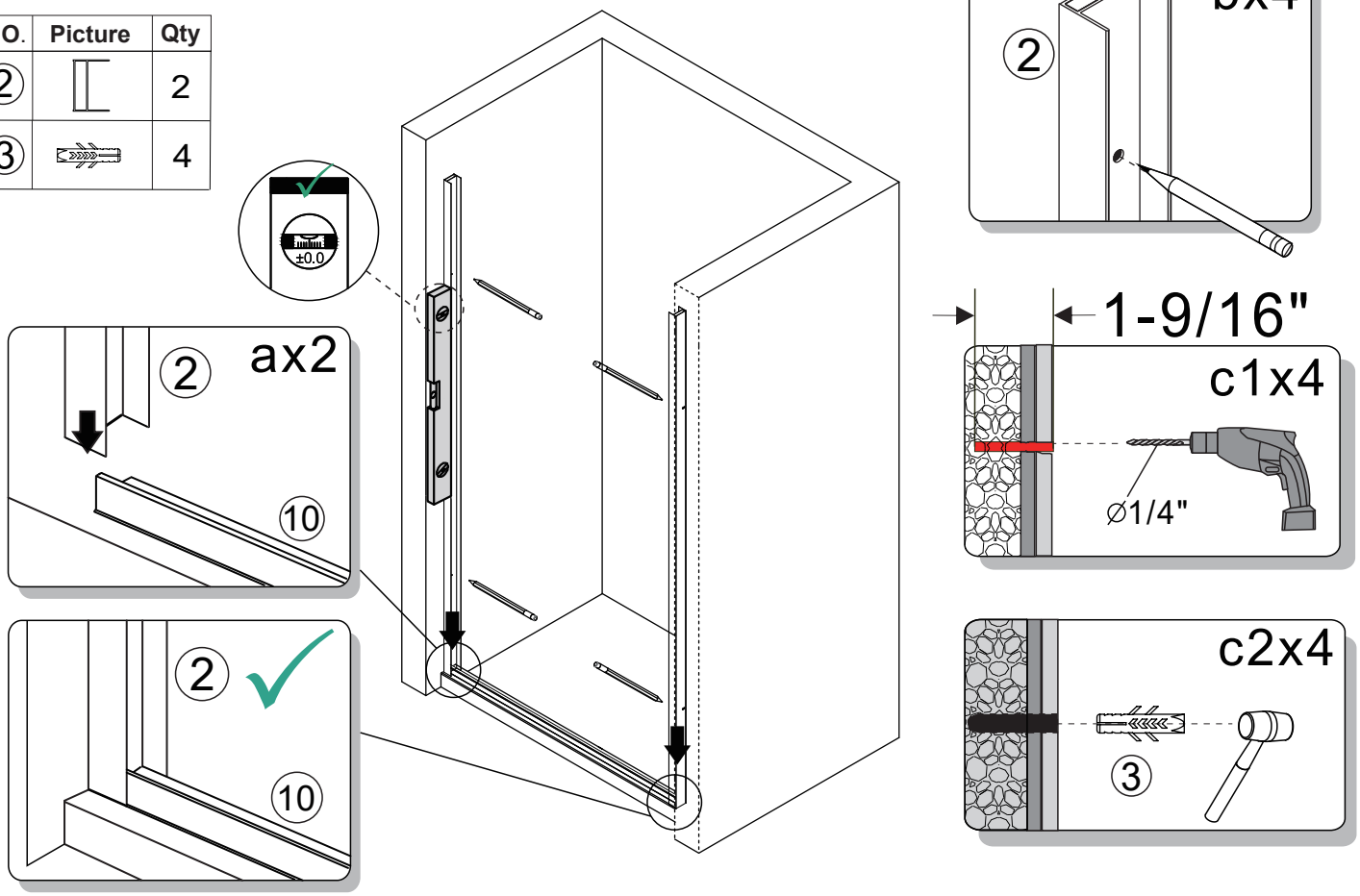

Step 4

NO.	Picture	Qty
4	Ø3/16"D x -9/16"L	4
5		4
6	Ø3/16"D x /85"L	4
7		4

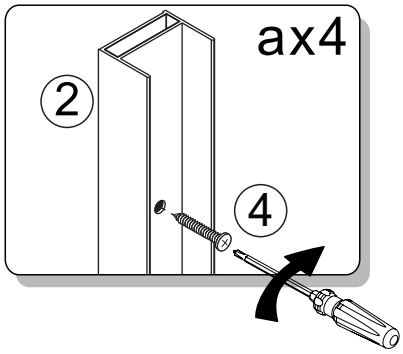

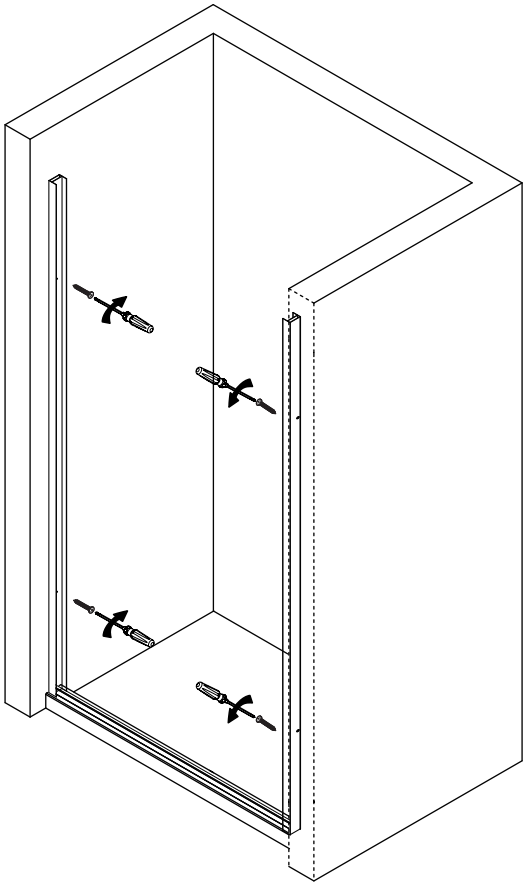

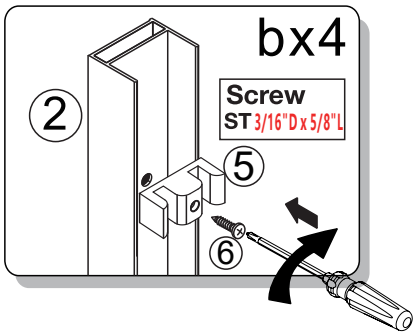

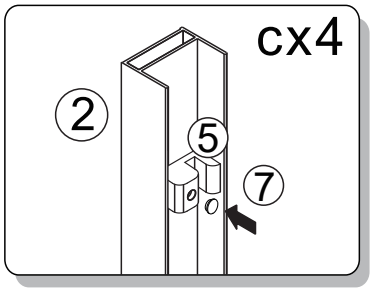

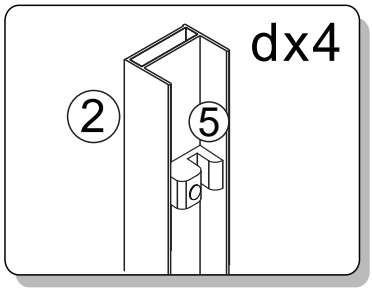

Step 5

NO.	Picture	Qty
1		1

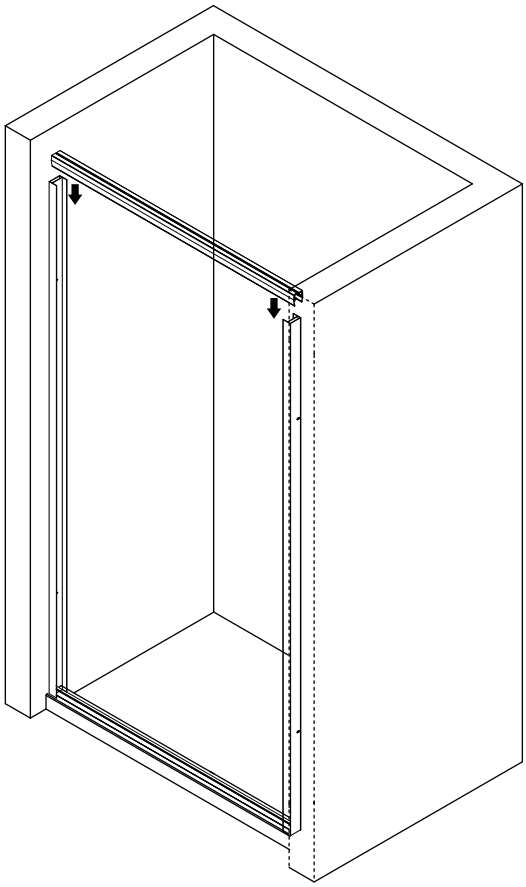

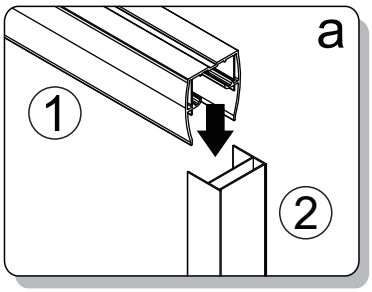

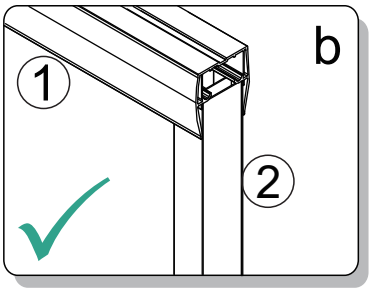

Step 6

NO.	Picture	Qty
13		2
14	Ø 3/16"D x 5/16"L	2
15		2

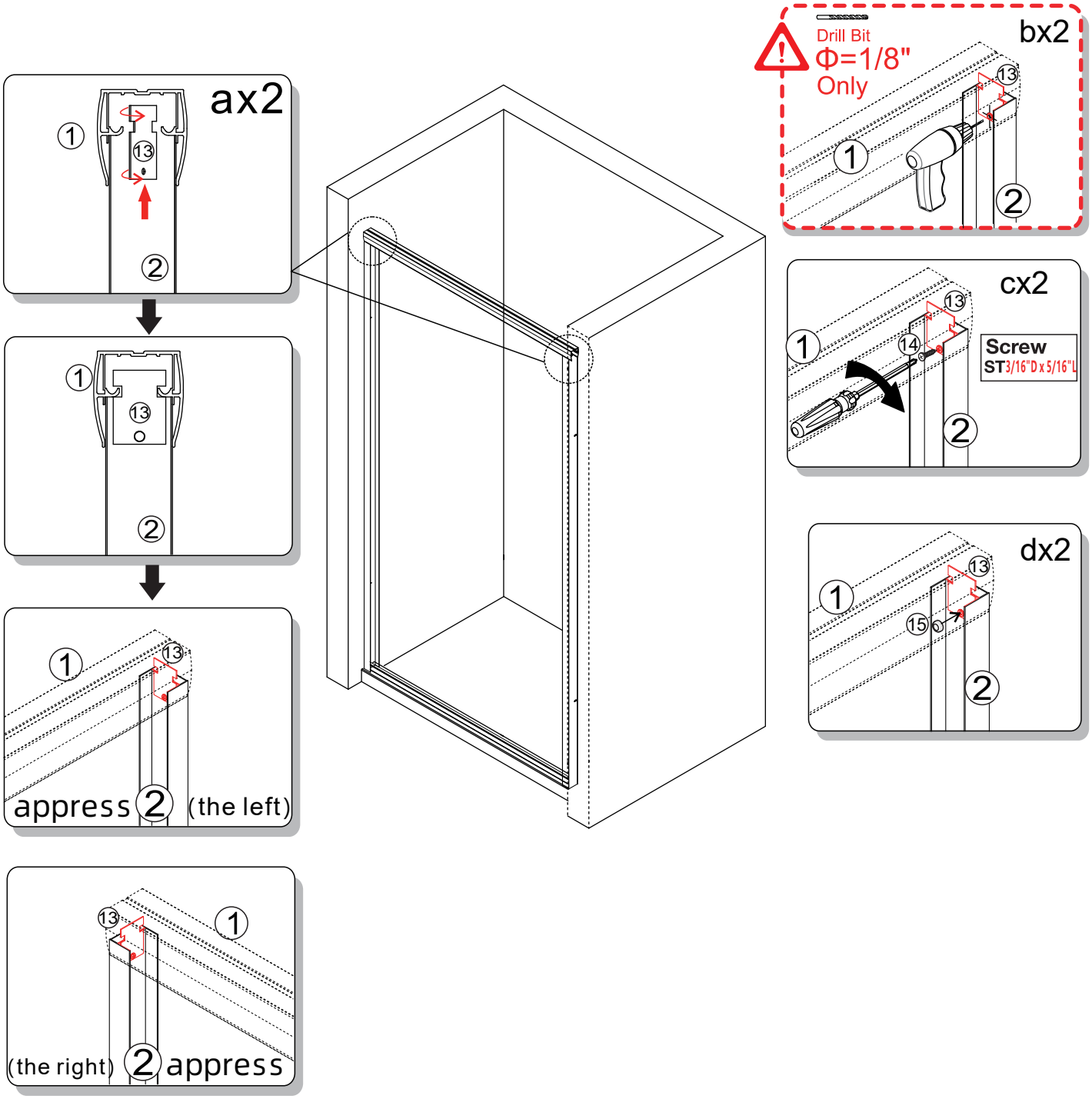

Step 7

NO.	Picture	Qty
8		2
12		4

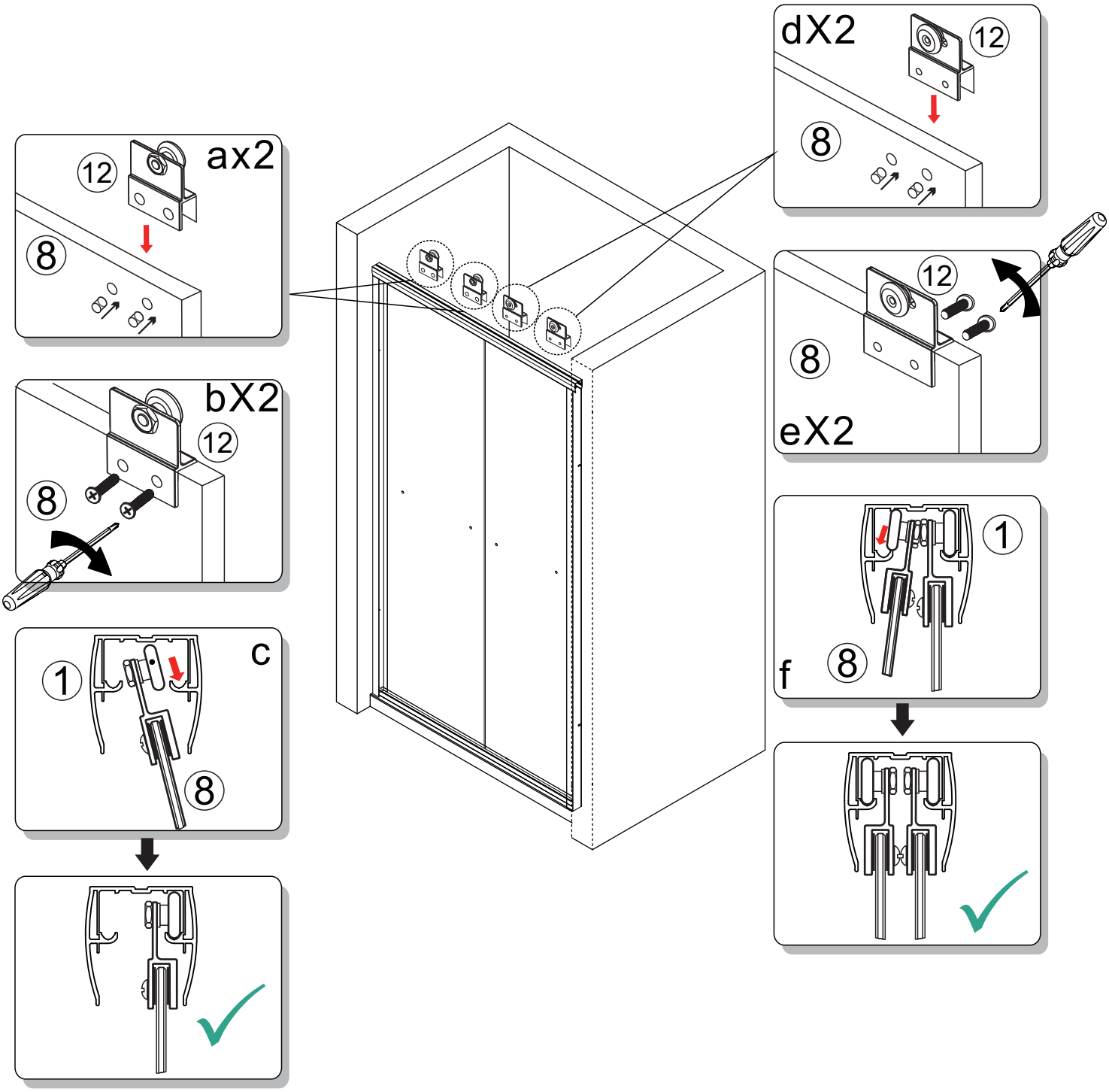

Step 8

NO.	Picture	Qty
11		1
14	Ø 3/16"D x 5/16"L	2
15		2

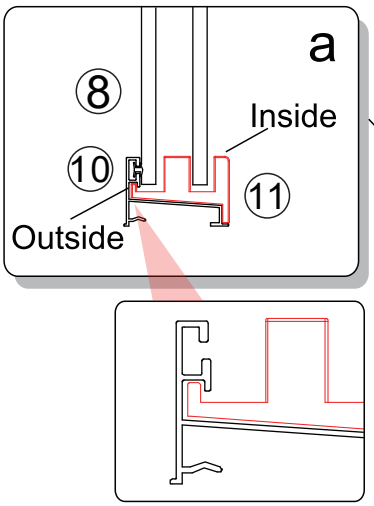

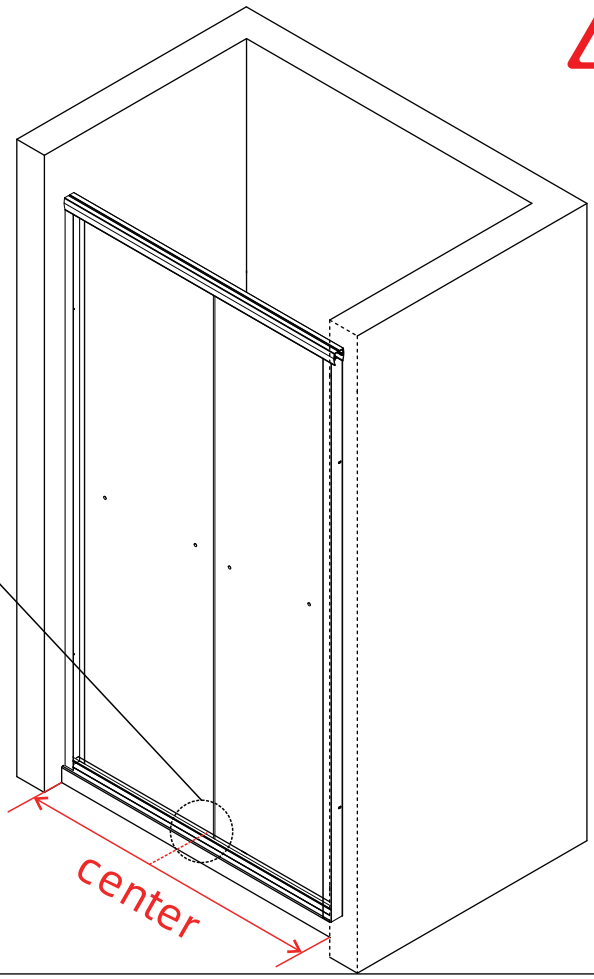

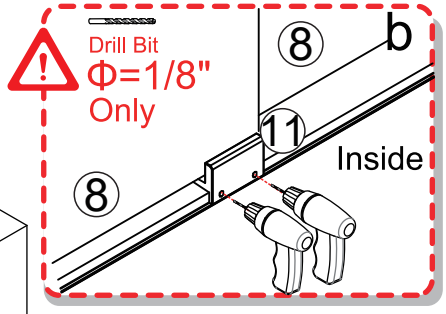

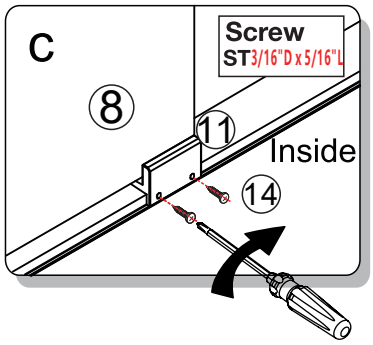

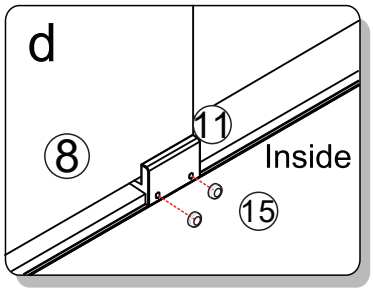

Step 9

NO.	Picture	Qty
9		2

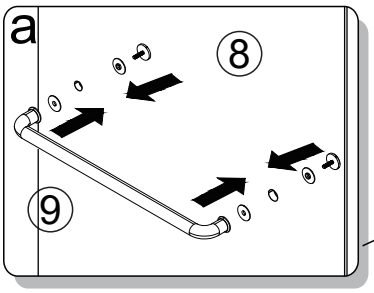

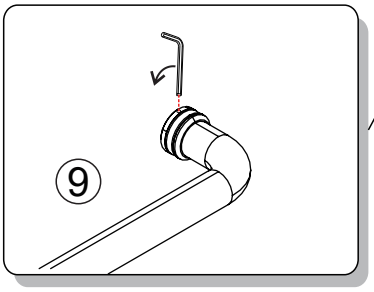

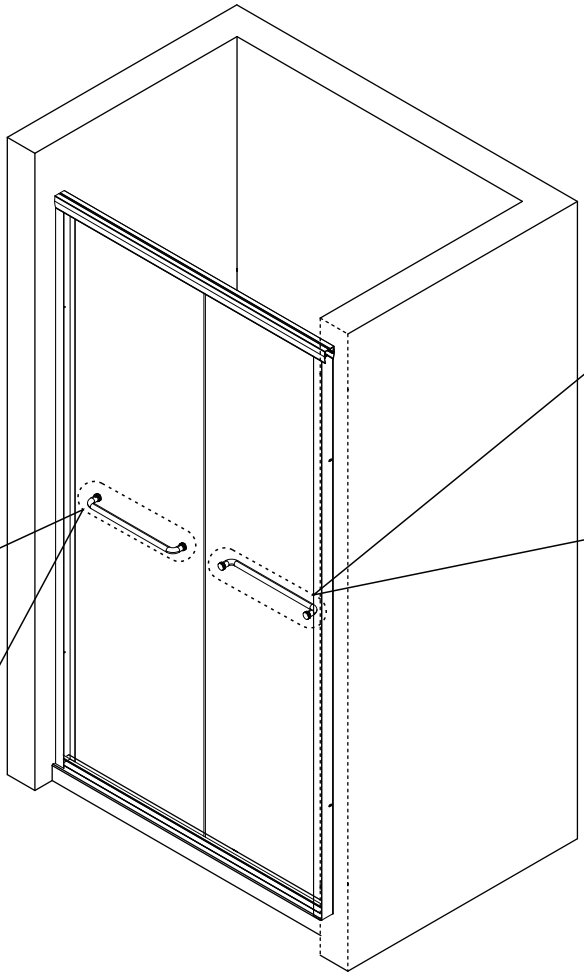

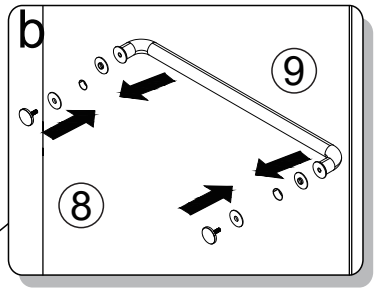

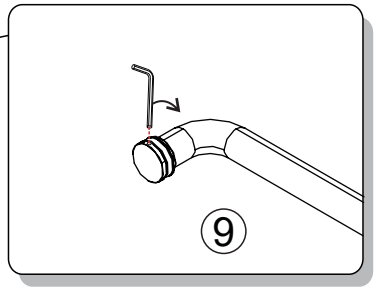

Step 10

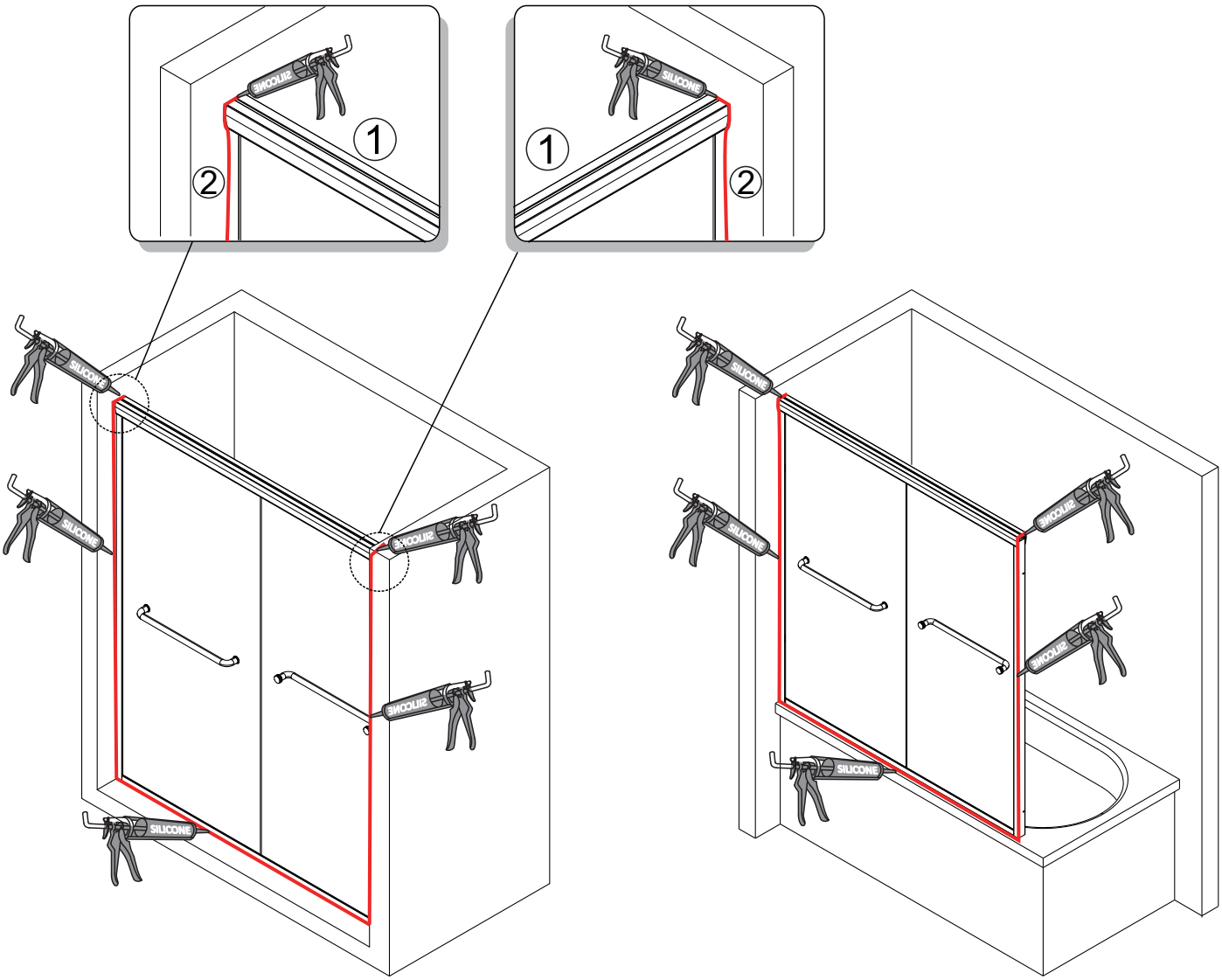

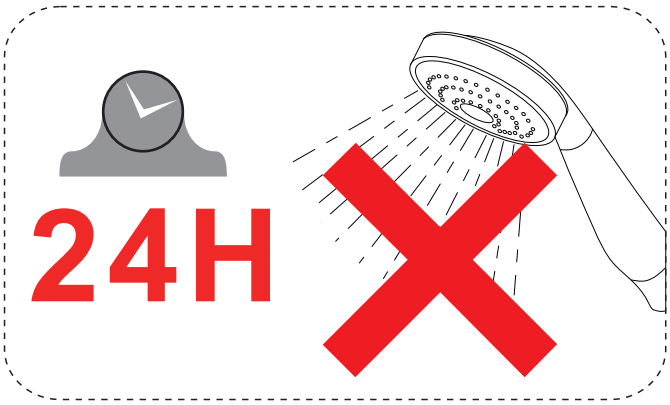

Do not use the shower enclosure for at least 24 hours in order to allow the silicone sealant to cure fully.

CARE & MAINTENANCE

The golden rules for care

NOTE: Use warm soapy water and a soft damp cloth to keep the glass clean. Wipe dry with a clean cloth. Glass cleaner can be used if required. Scourers, abrasives and chemical cleaners can damage the glass and pattern, and should not be used.

In hard water areas, insoluble lime salts may be deposited on the glass. If this is allowed to build up it becomes increasingly difficult to remove and looks unsightly. Regular cleaning will minimize this effect.

- ☑ Do not attempt to cut the glass.
- ☑ Do not strike the glass with hard or pointed items.
- ☑ Regularly check moving parts such as rollers and hinges to ensure they are secure and adjusted correctly. Tighten and adjust where required. Also check all sealed joints to ensure seal has not deteriorated. Re-seal if required.

Warranty

ALL OTHER WARRANTIES EXPRESS OR IMPLIED INCLUDING ALL IMPLIED WARRANTIES OF MERCHANTABILITY OF FITNESS FOR A PARTICULAR PURPOSE ARE HEREBY DISCLAIMED GETPRO IS NOT LIABLE FOR ANY INDIRECT, PUNITIVE, INCIDENTAL,CONSEQUENTIAL, SPECIALOR SIMILAR DAMAGES INCLUDING, BUT NOT LIMITED TO, TIME AWAY FROM WORK, HOTELS AND/ORRESTAURANT MEALS, REMODELLING EXPENSES IN EXCESS OF DIRECT DAMAGES WHICH AREDEFINITIVELY CAUSED EXCLUSIVELY BY GETPRO, LOST PROFITS OR REVENUE, INABILITY TOUSE THE PRODUCT,OR ANY OTHER ASSOCIATED EQUIPMENT, THE COST OF SUBSTITUTEEQUIPMENT, AND ANY CLAIMS BY THIRD PARTIES RESULTING FROM THE USE OF THIS PRODUCT.

GETPRO PRODUCTS MUST BE INSTALLED BY A FULLY INSURED, LICENSED, PROFESSIONAL WHO SHALL FOLLOW THE INSTRUCTIONS PROVIDED BY GETPRO, SHOULD THE PRODUCT BE INSTALLED BY AN INDIVIDUAL WHO IS NOT A FULLY INSURED, LICENSED PROFESSIONAL, THIS SHALL VOID THE WARRANTY OF THE PRODUCT.

SHOULD A WARRANTY CLAIM ARISE AND EITHER PARTS, REPLACEMENT, OR REPAIR OF THE GETPRO PRODUCT IS NECESSARY, FULFILLING THE INITIAL WARRANTY CLAIM SHALL DISCHARGE GETPRO OF ANY FUTURE WARRANTY OBLIGATION. IF THE PURCHASER REFUSES THE WARRANTY SOLUTION PROVIDED BY GETPRO, THIS ACT SHALL VOID THE WARRANTY. UNDER BOTH INSTANCES, GETPRO WILL NOT BE HELD RESPONSIBLE FOR ANY COSTS ASSOCIATED WITH SERVICING THE WARRANTY.

NO PERSON MAY MAKE ANY REPRESENTATION, AFFIRMATION, OR WARRANTY OTHER THAN THOSE CONTAINED IN THIS WARRANTY, ANY AFFIRMATION, REPRESENTATION OR WARRANTY BY ANY PERSON WHO IS NOT A GETPRO EMPLOYEE SHALL NOT BE ENFORCEABLE AGAINST GETPRO.

GETPRO makes no representations about the quality, durability, or need for service or repair of its products other than the representations contained in this warranty. If you want a longer or more comprehensive warranty than the limited warranty that comes with this product, you should ask GETPRO about buying an extended warranty. This warranty gives you specific legal rights, and you may have other rights that vary from state to state.Some states do not allow the exclusion or limitation Of incidental or consequential damages, and some states do not allow limitations on how long an implied warranty lasts, so the imitations or exclusions stated above may not apply and may vary from state to state

The warranties stated herein apply only to the first purchaser of the Product and are not transferable. GETPRO reserves the right to request proof of purchase at the time any warranty claim is submitted to confirm that the Product falls within the scope of this limited product warranty.

OUT OF WARRANTY PRODUCT

GETPRO IS UNDER NO OBLIGATION, AT LAW OR OTHERWISE,TO PROVIDE YOU WITH ANY CONCESSIONS.INCLUDING REPAIRS.PRORATES

WARRANTY

LIMITED MANUFACTURER'S WARRANTY

- All parts and finishes of GETPRO products are warranted to the original consumer purchaser to be free from defects in material and workmanship for a period of two to five years [depending on the product and model: please check the product listing or email us at service@getprohome.com if you are unsure after the date of original retail purchase. Proof of the original purchase is required to obtain a remedy under this limited warranty.

- GETPRO recommends using a certified professional for all installation and repair of kitchen and bathroom fixtures.

- GETPRO will replace, free of charge, during the warranty period any part or finish that proves defective in material and/ or workmanship under normal installation, use and service. Replacement parts may be obtained by emailing us at service@getprohome.com

- This warranty is extensive in that it covers replacement of all defective parts and even finish, but these are the only two things that are covered. Labor charges and/or damage incurred in installation, repair, or replacement as well as any other kind of loss or damages are excluded.

- Proof of purchase (original sales receipt)from the original consumer purchaser must be made available to GETPRO for all warranty claims. This is the exclusive warranty by GETPRO, which does not make any other warranty of any kind including the implied warranty of Merchant ability.This warranty excludes all industrial, commercial and business usage whose purchasers are hereby extended a one-year limited warranty from the date at purchase, with all other terms of this warranty applying except the duration of the warranty.

NO ATTEMPT TO ALTER, MODIFY, OR AMEND THIS WARRANTY SHALL BE EFFECTIVE UNLESS AUTHORIZED IN WRITING BY AN OFFICER OF GETPRO

service@getprohome.com

WHAT IS NOT COVERED UNDER THIS LIMITED WARRANTY

- Normal wear and tear, spills of food, liquid, grease accumulations or cosmetic damage.
- Damage due to accidents,misuse, physical force improper installation or operation, mishandling, neglect, fire, heat, water, humidity, liquids, insect infestation, or other intrusion.
- Products that have been repaired,altered or modified by anyone other than GETPRO or its authorized service representative.
- Damage caused by use of non-GETPRO accessories or misapplication Products whose serial numbers have been removed altered or rendered illegible.
- Products purchased,shipped from,used or serviced outside the United States. Canada.and Mexico.
- Damage caused by acts of nature such as, but not limited to, lightning damage.
- Products returned without valid proof of purchase.
- Consumable parts such as light bulbs, metal, and charcoal filters.
- Any party's willful misconduct,negligence, misuse,abuse,accidents,neglect,improper operation, failure to maintain,improper or negligent installation.tampering,failure to follow operating instructions,mishandling,unauthorized service (including self-performed "fixing" or exploration of the product's internal workings).
- Use of corrosive or abrasive cleaning products.
- Cosmetic damages including scratches, dents, chips and other damage, unless such damage results from defects in materials and workmanship and is reported to GETPRO within 3 calendar days of delivery.
- Use of the Product in anything other than its normal customary and intended manner.
- A failure to comply with any applicable state, local city or county electrical, plumbing and/or building codes, regulations, or laws, including failure to install the product in strict conformity with local fire and building codes and regulations.
- In no event shall GETPRO have any liability or responsibility whatsoever for damage to surrounding property, including cabinetry, floors, ceilings, and other structures or objects around the product.

HOME SERVICES

SCAN ME

INSTALLATION VIDEO

Missing Part or Defective?

Please Contact the Customer Service Team

service@getprohome.com

626 679 3588