ASSEMBLY INSTRUCTION

Read this instruction carefully. Remove all wrapping material, staples and straps from the carton. See hardware and furniture part list

For guidance. Be sure you have all wooden furniture parts on a clean and flat soft surface, such as a carpet or rug, to prevent from being scratched.Follow the figure to start assembling.

CAUTION :

1. Do not FULLY - TIGHTEN the nut or screw untill all is ready to assemble.
2. Do not OVER - TIGHTEN the nut or screw to avoid causing damages to the thread.
3. Keep all hardware part out reach of children.

NO	PART LIST	QTY
A	BACK REST	1 PC
B	FRONT LEG	1 PC
C	SIDE RAIL	2 PCS
D	BENT CUSHION SEAT	1 PC
E	STRETCHER	2 PCS
F	CENTER SUPPORT	1 PC
G	WOOD BUTTON	4 PCS

NO	DESCRIPTION	QTY
1	JCBC SCREW M6 X 70MM	4 PCS
2	JCBC SCREW M6 X 50MM	2 PCS
3	SPRING WASHER	6 PCS
4	WOOD DOWEL Ø8 x 30MM	4 PCS
5	CSK SCREW M4 x 30MM	4 PCS
6	CSK SCREW M4 x 38MM	4 PCS
7	M4 ALLEN KEY	1 PC

STEP 1.1

Firstly, stick F to C for both left and right side.

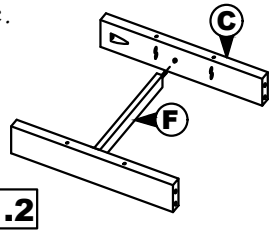

STEP 1.2

Then, attached STEP 1.1 to B according to the hole and tighten it using hardware number 2,3,4 and 7.

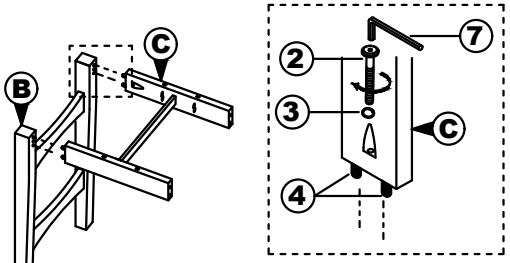

STEP 1.3

Align and tighten one side of part E to B using hardware number 6.

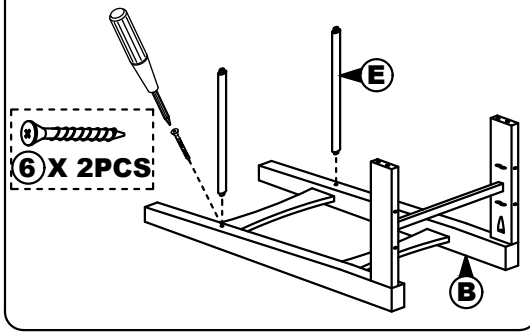

STEP 2.1

Continued with combine the whole part from STEP 1.3 to A . Tighten the part of C and A using hardware number 3, 1 and 7 . Then cover the hole with G.

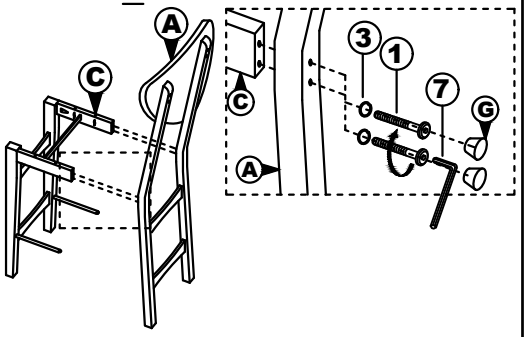

STEP 2.1

Next, combine the other part of E to A using hardware number 6 .

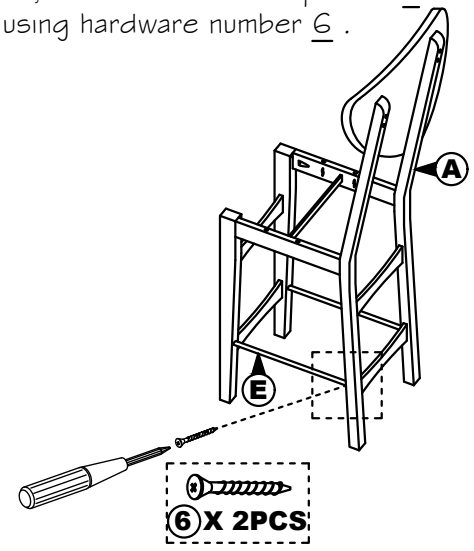

STEP 3

Stick D to the whole assemble part and fully-tighten it with hardware number 5 .

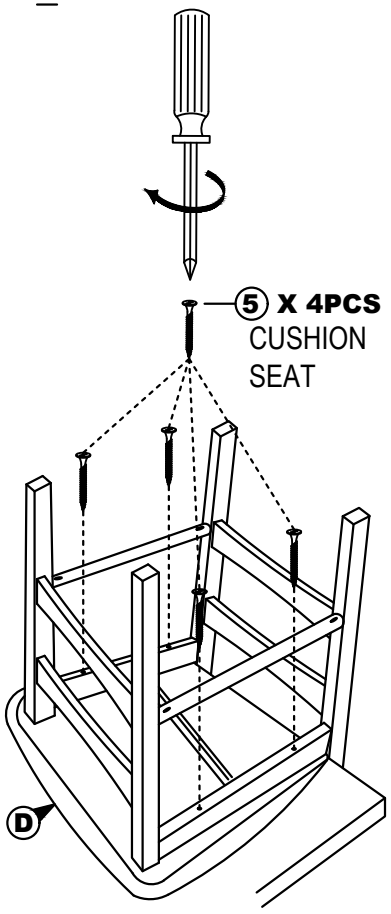

STEP 4

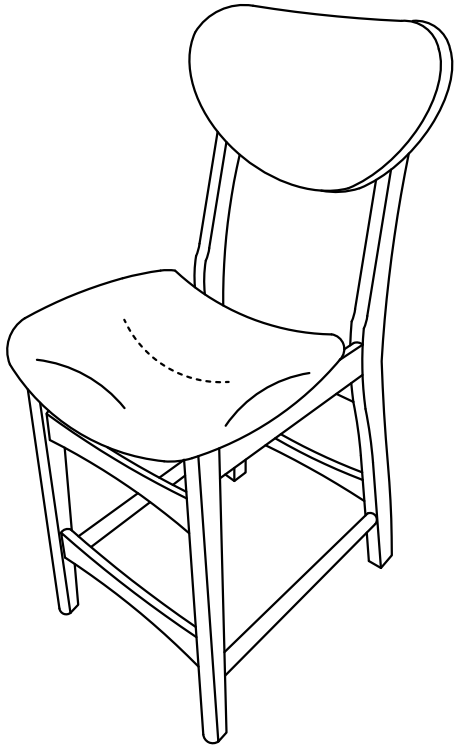

COMPELETE
ASSEMBLE