GETPRO®

626-679-3588
service@getprohome.com
www.getprohome.com
162 Atlantic St, Pomona, CA 91768

SIZE DETAILS

ACRYLIC BATHTUB

service@getprohome.com
626 679 3588

SCAN ME

PRODUCT INSTRUCTION VIDEO

626-679-3588
service@getprohome.com
www.getprohome.com
162 Atlantic St, Pomona, CA 91768

SIZE DETAILS

PRODUCT
INSTRUCTION
VIDEO

MODEL No.GS343-67W

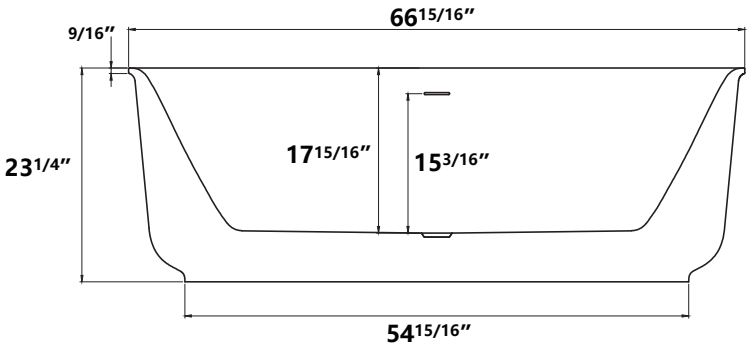

(Side View)

GS343-67W

ADJUSTABLE FOOT: 6 PCS

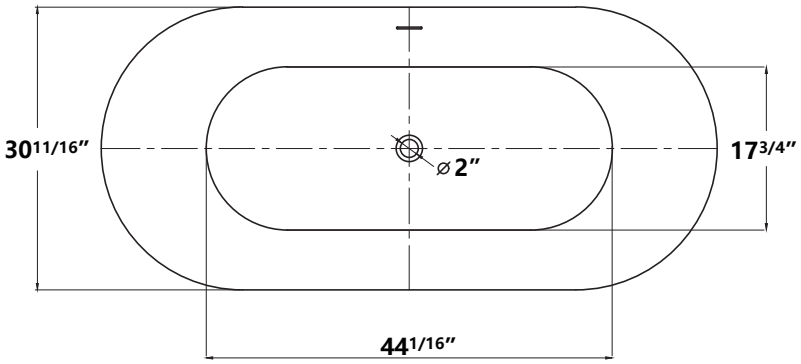

(Top View)