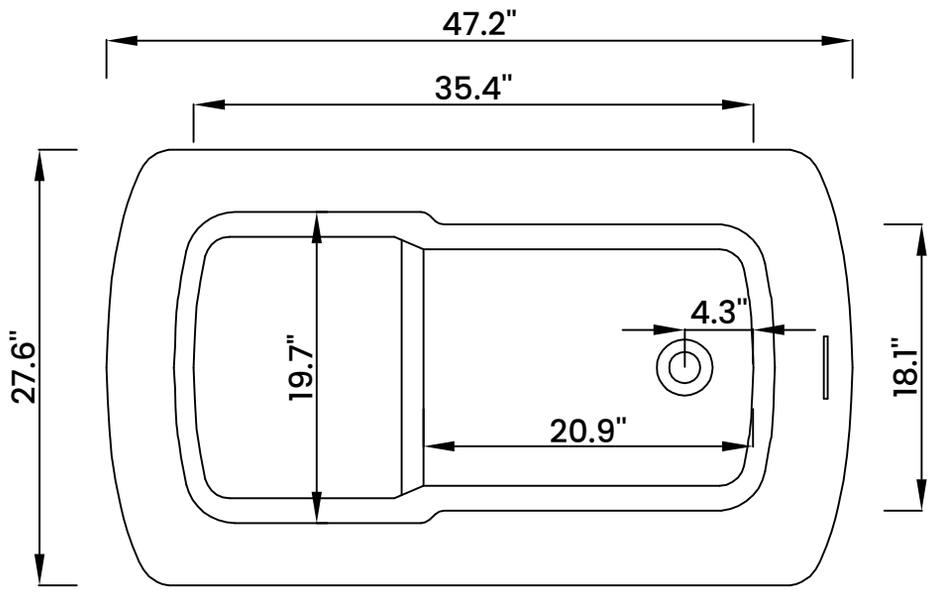
47.2"
35.4"
27.6"
19.7"
4.3"
18.1"
20.9"

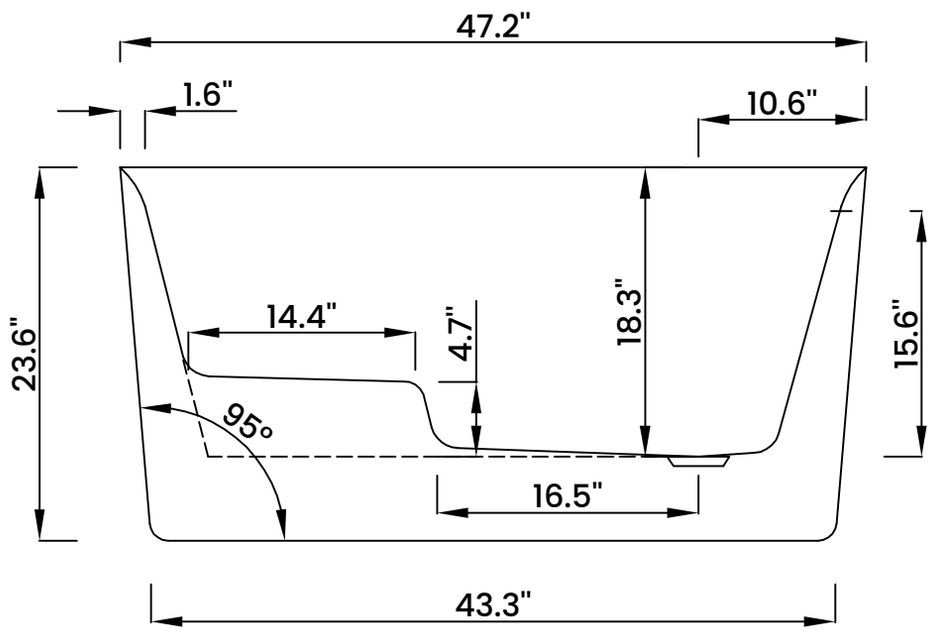
47.2"
1.6"
10.6"
23.6"
14.4"
4.7"
18.3"
15.6"
95°
16.5"

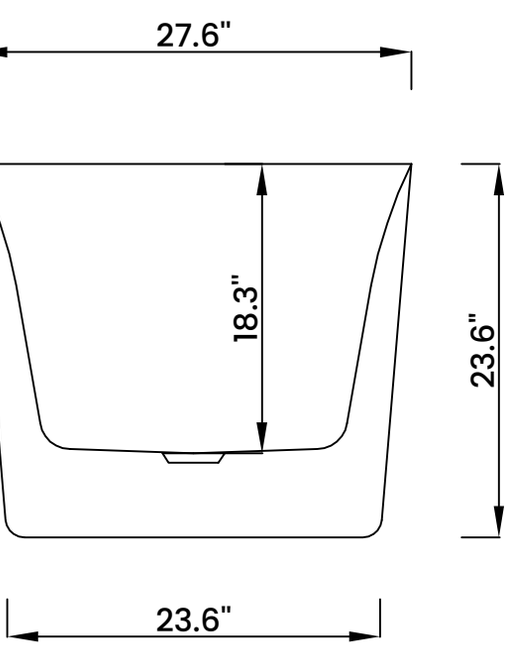
43.3"
27.6"
18.3"
23.6"
23.6"