ASSEMBLY INSTRUCTION

SKU CODE: (WF288643-WF288644-WF288645)

This set is included 3 boxes if don't receive full 3 boxes please contact our customer service team

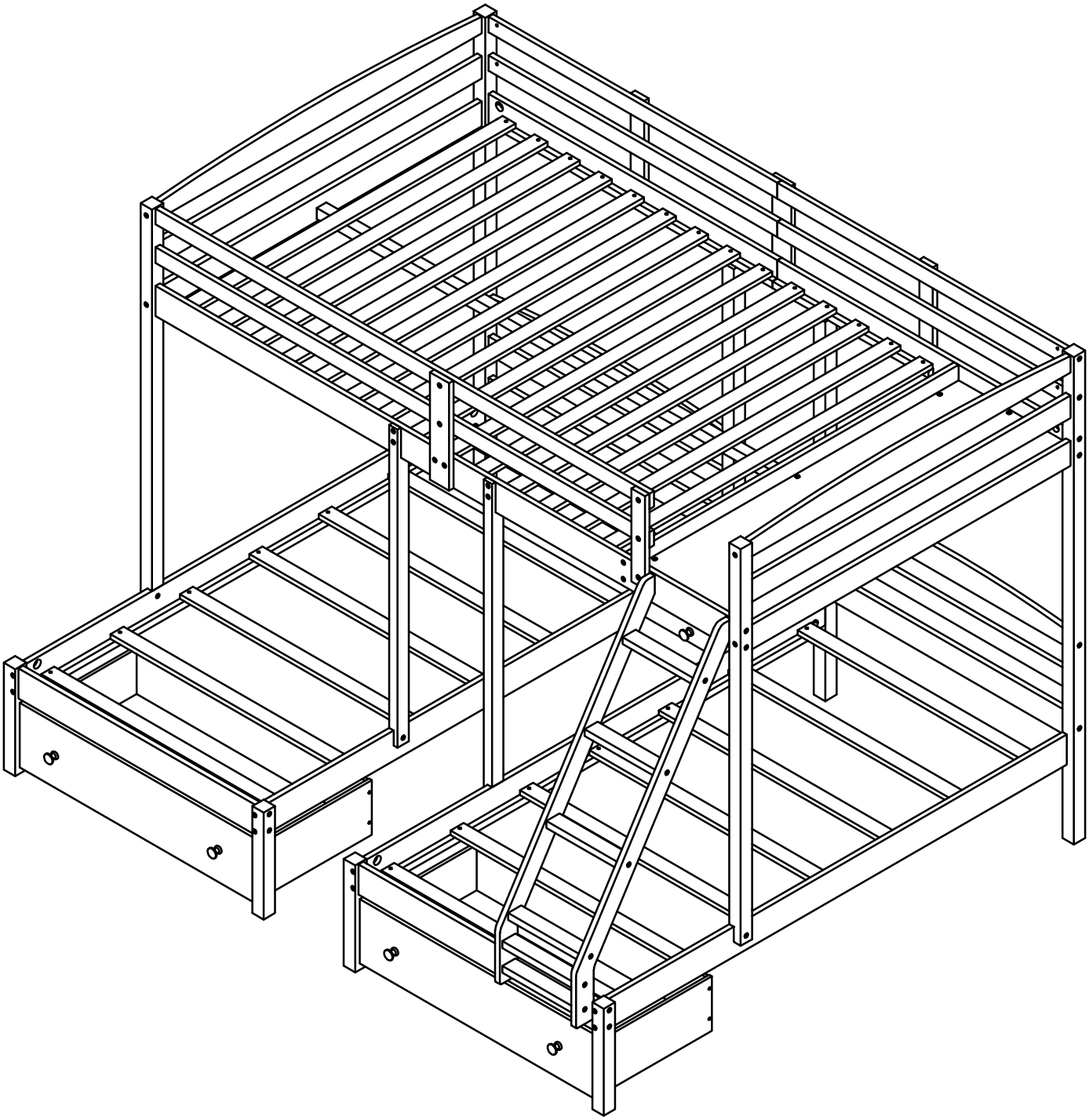

! SAFETY WARNINGS !

1. This bed is designed for use only mattress(es) meeting the following specifications on the upper bunk, and lower bunk:

Bed Type	Length	Width	Thickness
Twin Standard	*74" - 75"*	*38 1/ 2"*	*8" max*
Full Standard	*74" - 75"*	*53 1/2 "*	*8" max*

2. Replacement parts, including additional guardrails, may be obtained from any of our (GIGACLOUD TECHNOLOGY(USA) INC) dealers
3. Follow the information on the warnings appearing on the upper bunk bed end structure and on the carton. Do not remove warning label from bed.
4. Always use the recommended size mattresses or mattress supports, or both, to help prevent the likelihood of entrapment or falls.
5. Surface of the mattress must be at least 5"(127 mm) below the upper edge of guardrails.
6. Do not allow children under 6 years of age to use the upper bunk.
7. Periodically check and ensure that the guardrail, ladder, and other components are in their proper position, free from damage, and that all connectors are tight.
8. Do not allow horseplay on or under the bed and prohibit jumping on the bed
9. Always use the ladder for entering and leaving the upper bunk.
10. Do not use substitute parts. Contact the manufacturer or dealer for replacement parts.
11. Use of a night light may provided added safety precaution for a child using the upper bunk.
12. Always use guardrails on both long sides of the upper bunk. If the bunk bed will be placed next to the wall, the guardrail that runs the full length of the bed should be placed against the wall to prevent entrapment between the bed and wall.
13. The use of water or sleep flotation mattresses is prohibited.
14. STRANGULATION HAZARD – Never attach or hang items to any part of the bunk bed that are not designed for use with the bed; for example, but not limited to, hook, belts and jump ropes.
15. Keep these instructions for future reference

ASSEMBLY INSTRUCTION

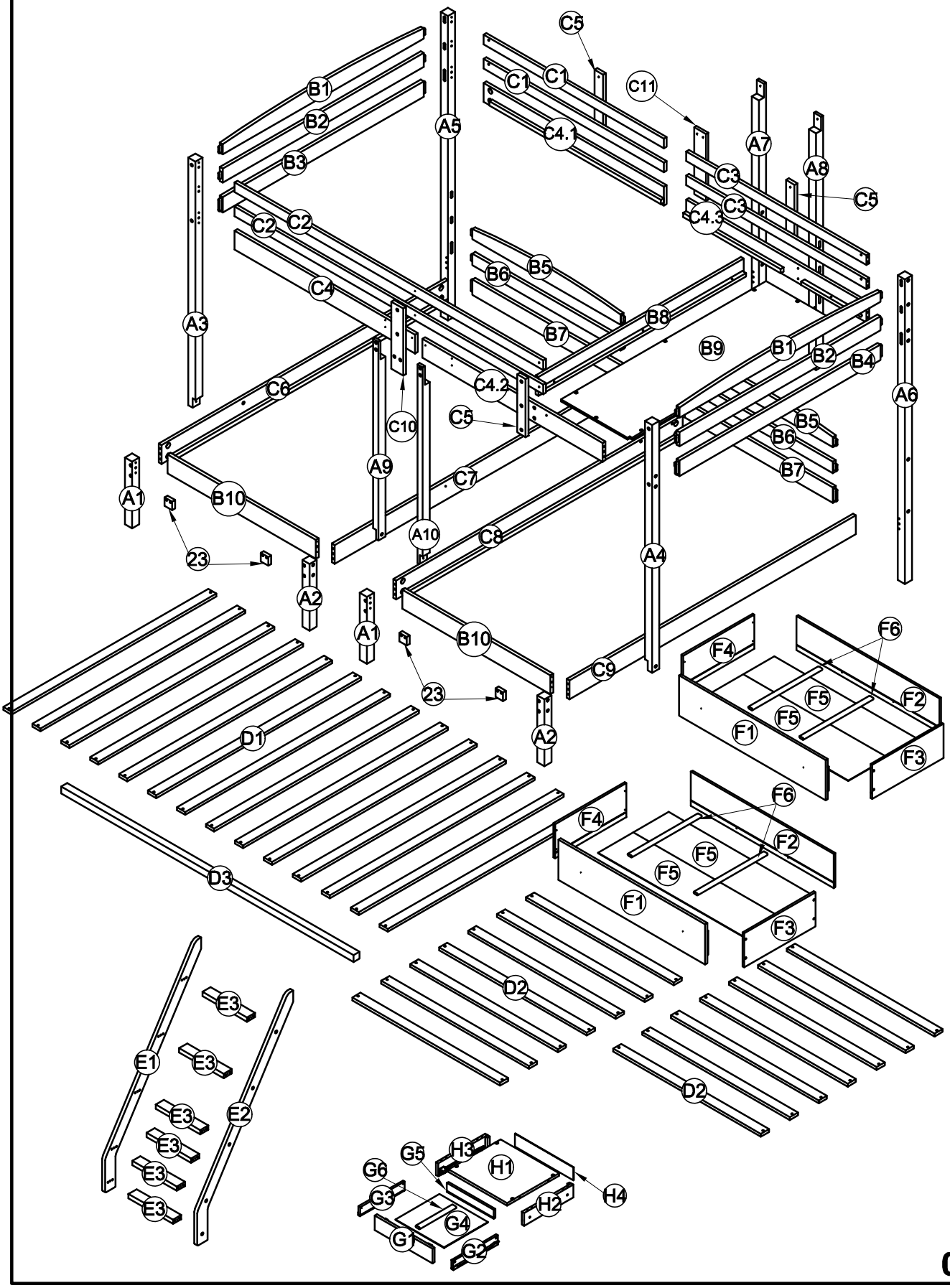

Part List (Box 1-WF288643)

A9 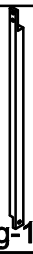 Leg-1pcs	A10 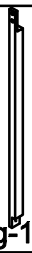 Leg-1pcs	B1 WoodBar-2pcs
B2 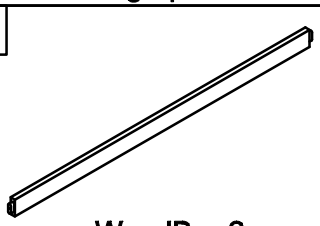 WoodBar-2pcs	B3 WoodBar-1pcs	B4 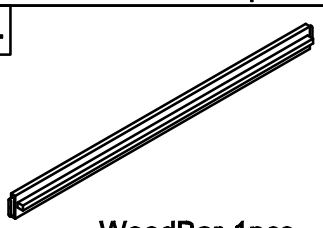 WoodBar-1pcs
B5 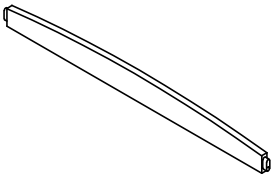 WoodBar(Back)-2pcs	B6 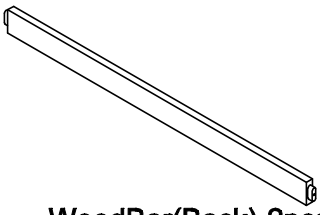 WoodBar(Back)-2pcs	B7 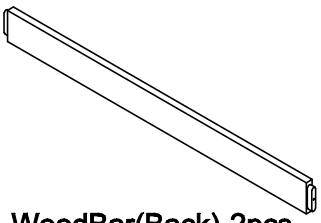 WoodBar(Back)-2pcs
B8 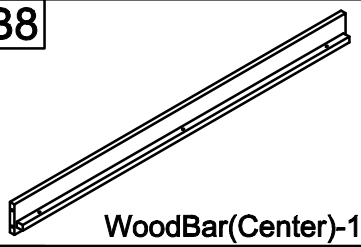 WoodBar(Center)-1pcs	B9 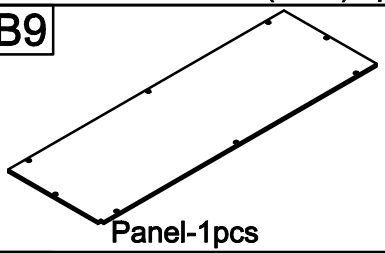 Panel-1pcs	B10 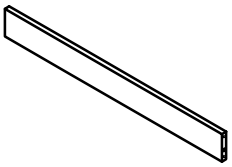 WoodBar-2pcs
D1 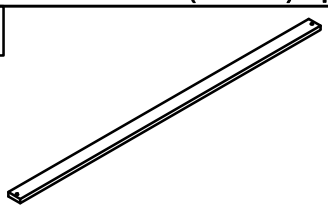 Slats-(Bottom)-14pcs	E3 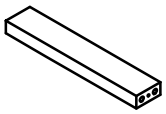 Step Ladder-6pcs	F1 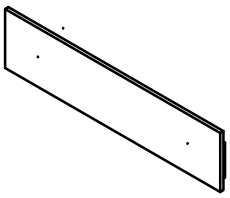 Drawer-Front Panel-2pcs
F5 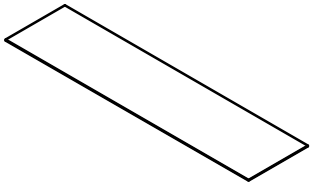 Drawer-Bottom Panel-4pcs	F6 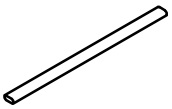 Drawer-Support Bottom Panel-4pcs	G1 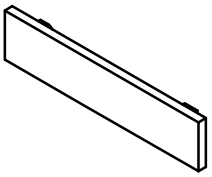 Drawer-Front Panel(Small)-1pcs
G2 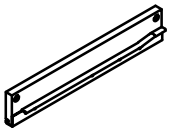 Drawer-Side Panel(Small)-1pcs	G3 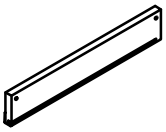 Drawer-Side Panel(Small)-1pcs	G4 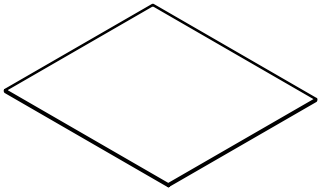 Drawer-Bottom Panel(Small)-1pcs

Part List (Box 1-WF288643)

G5 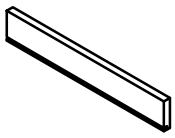 Drawer-Back Panel(Small)-1pcs	G6 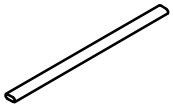 Drawer-Support Bottom Panel-1pcs	H1 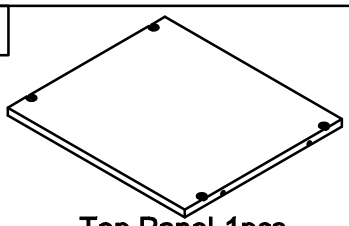 Top Panel-1pcs
H2 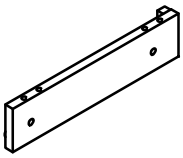 Side Panel-1pcs	H3 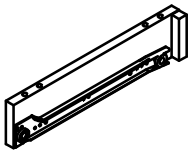 Side Panel-1pcs	H4 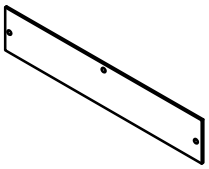 Back Panel-1pcs

Part List(Box 2-WF288644)

A1 Legs-2pcs	A2 Legs-2pcs	A3 Leg-1pcs
A4 Leg-1pcs	A5 Leg-1pcs	A6 Leg-1pcs
A7 Leg-1pcs	A8 Leg-1pcs	C2 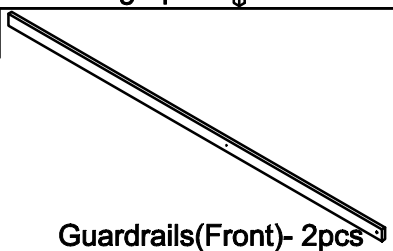 Guardrails(Front)- 2pcs
C5 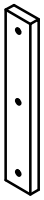 Rail-3pcs	C6 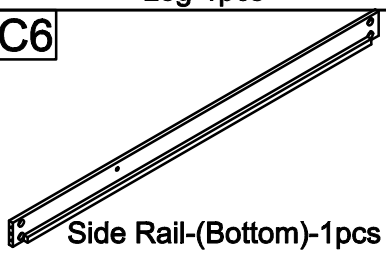 Side Rail-(Bottom)-1pcs	C7 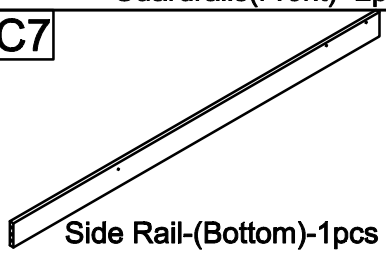 Side Rail-(Bottom)-1pcs
C8 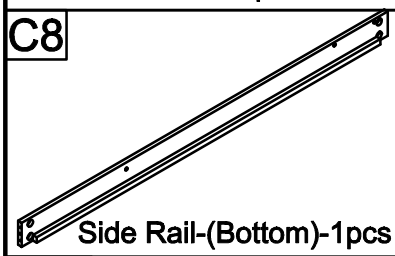 Side Rail-(Bottom)-1pcs	C9 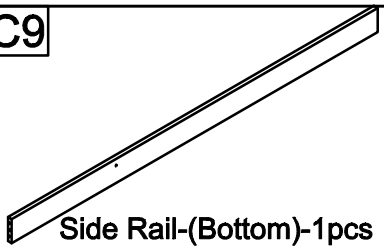 Side Rail-(Bottom)-1pcs	C10 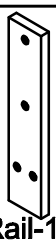 Rail-1pc
C11 Rail-1pc	D3 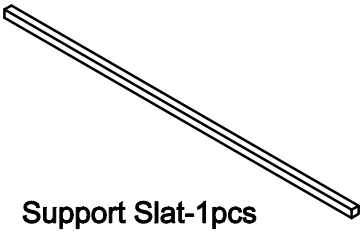 Support Slat-1pcs	E1 Side Ladder-1pcs
E2 Side Ladder-1pcs		

Part List & Hardwar List(Box 3-WF288645)

C1 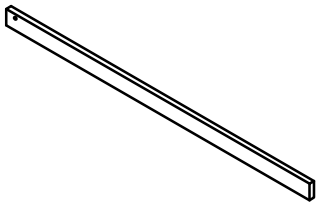 Guardrails(Back)- 2pcs	C3 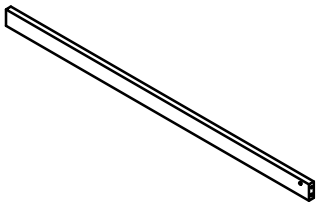 Guardrails(Back)- 2pcs	C4 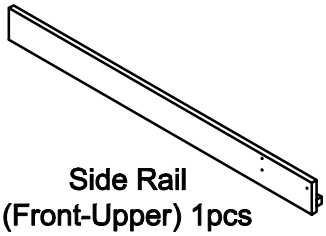 Side Rail (Front-Upper) 1pcs
C4.2 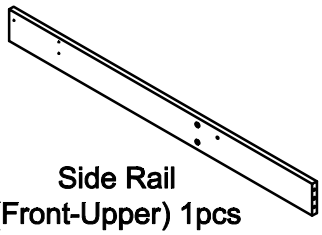 Side Rail (Front-Upper) 1pcs	C4.1 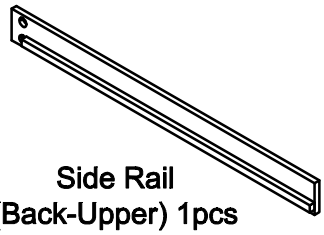 Side Rail (Back-Upper) 1pcs	C4.3 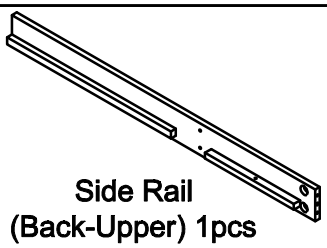 Side Rail (Back-Upper) 1pcs
D2 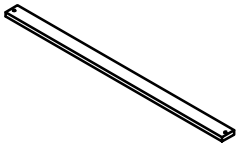 Slats-(Bottom)-14pcs	F2 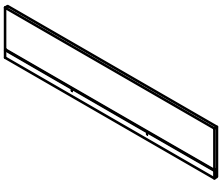 Drawer-Back Panel-2pcs	F3 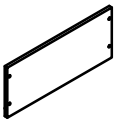 Drawer-Side Panel-2pcs
F4 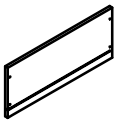 Drawer-Side Panel-2pcs		

Hardware List(Box 3-WF288645)

1 M4 x 30 mm Wood Screws 89pcs	2 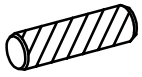 Ø10 x 40 mm Wood dowel 46pcs	3 Screws 1/4" x80 8pcs
4 Screws 1/4" x70 16pcs	5 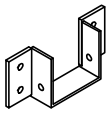 Steel Bracket 2pc	6 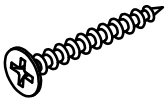 M4 x 20 mm Wood Screws 20pcs
7 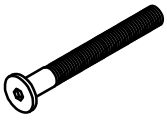 Ø1/4" x 100 mm Hex-Head bolts 30pcs	8 Screws 1/4" x30 22pcs	9 Ø1/4" x 35 mm Hex-Head bolts 2pcs
10 Ø1/4" x 15 mm Canopy head though -7cs	11 Ø1/4" x 25 mm Hex-Head bolts 13pcs	12 Ø1/4" x 13 mm Horizontal-Hole bolts 38pcs
13 Screws 1/4" x50 16pcs	14 Steel Bracket 4pc	15 Ø1/4" x 60 mm(Đầu 12) Hex-Head bolts 8pcs
16 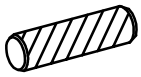 Ø8 x 30 mm Wood dowel 4pcs	17 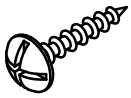 M4 x 15 mm Wood Screws 3pcs	18 Ø1/6" x 25 mm Hex-Head bolts 5pcs
19 Handle Wood 5pcs	20 Allen Key 1pc	

Hardware List

21	22	23
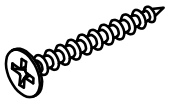 M3.5x 12 mm Wood Screws 24pcs	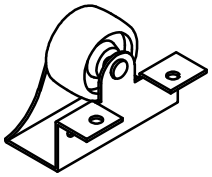 Wheels 8pcs	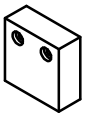 Stop Drawer-4pcs

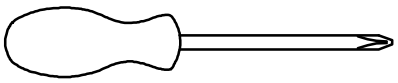

Assembly Tools Required (Not Included)

STEP1: Following below illustration Assembly Bottom bed's Footboard .

-Using hardware #1 connect B10 Woodbar with Stop Drawer #23

-Using hardware #3 and dowel #2 connect A1(x2) ,A2(x2) legs with B10 Woodbar

3	2	1
4x2(pcs)	2x2(pcs)	4x2(pcs)

23
2x2(pcs)

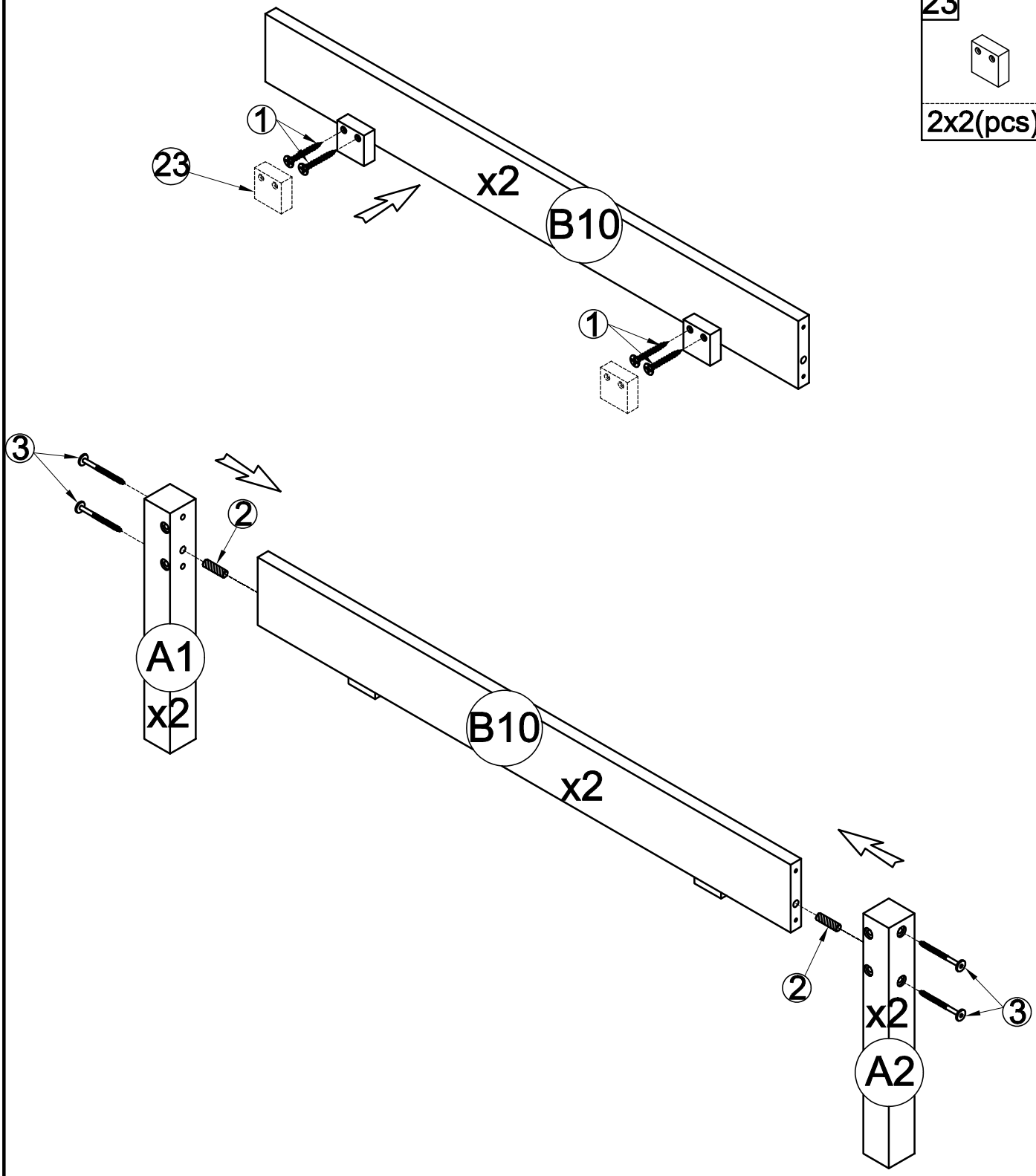

STEP 2: Following below illustration Assembly Bottom bed's Headboard .

-Using hardware #4 connect B5.B6,B7 Woodbar with A5,A7 Legs

-Using hardware #4 connect B5.B6,B7 Woodbar with A6,A8 Legs

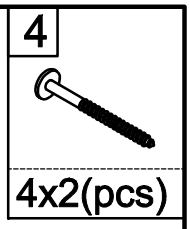

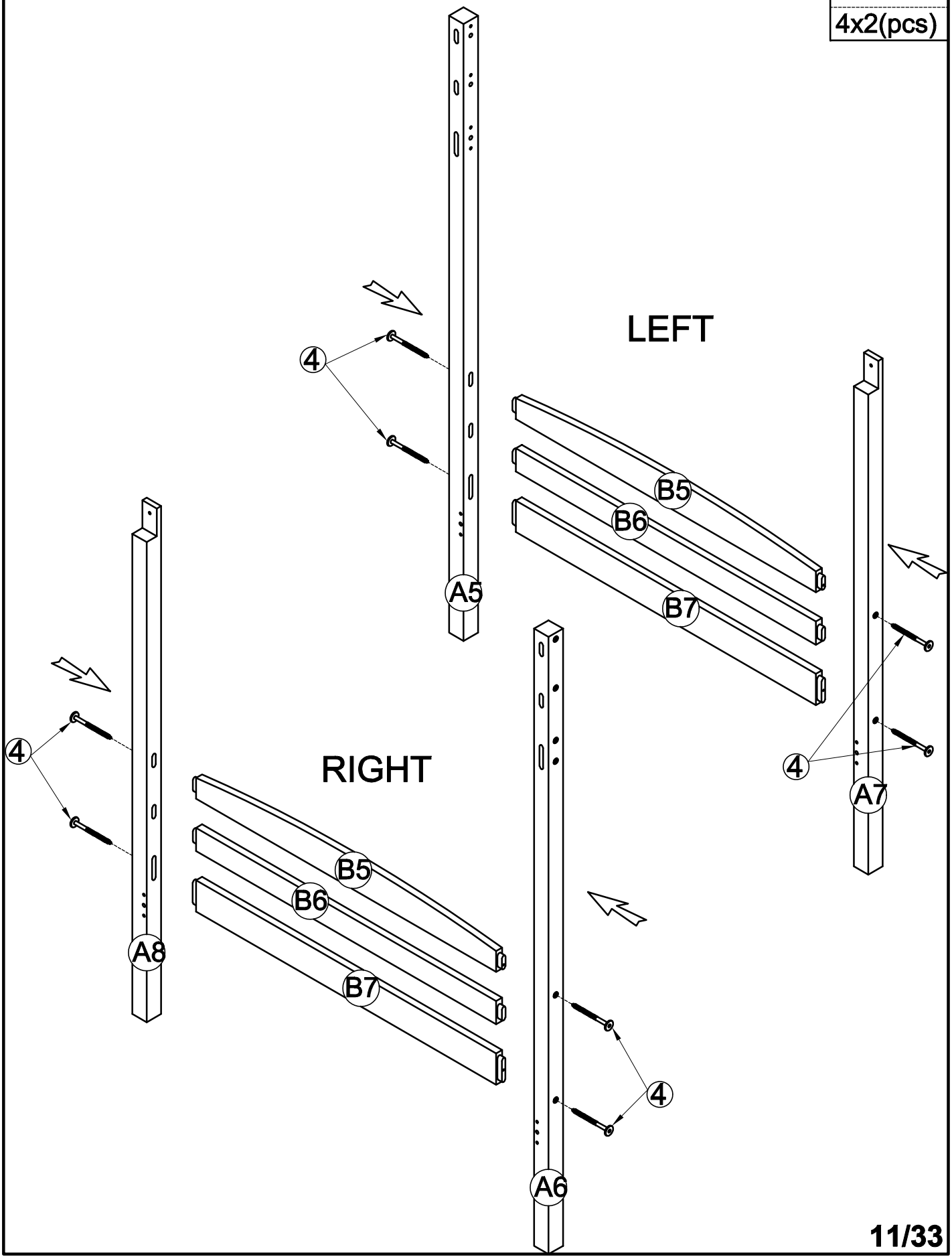

STEP 3: Following below illustration. .

Using hardware #6 connect Steel Bracket(#5) with B3 and B8.
Look at detail view for more detail

6	5
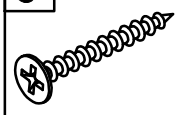	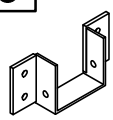
8(pcs)	2(pcs)

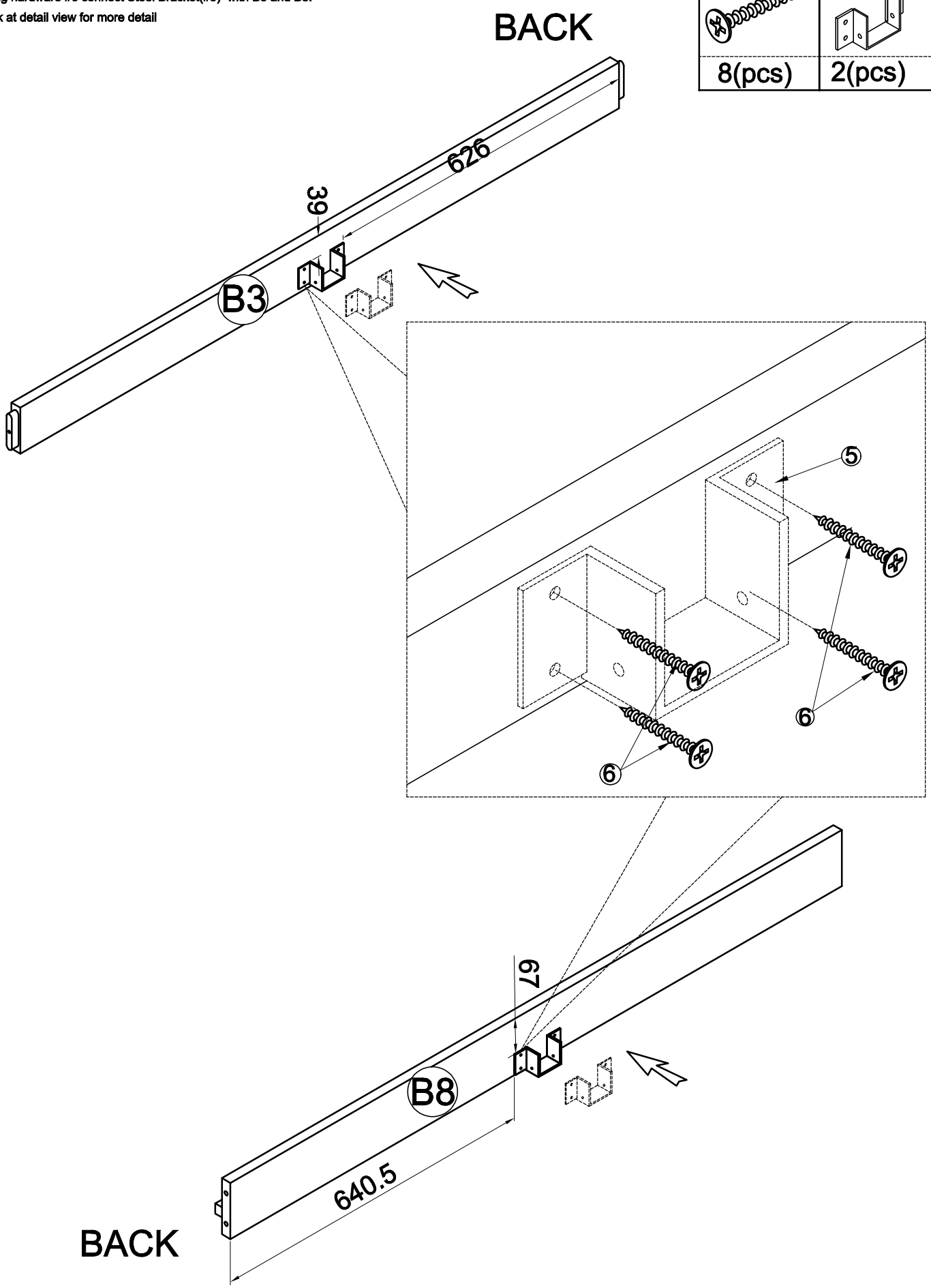

STEP 4: Following below illustration

-Using hardware #4 connect B1.B2,B4 Woodbar with A4 Leg

4

2(pcs)

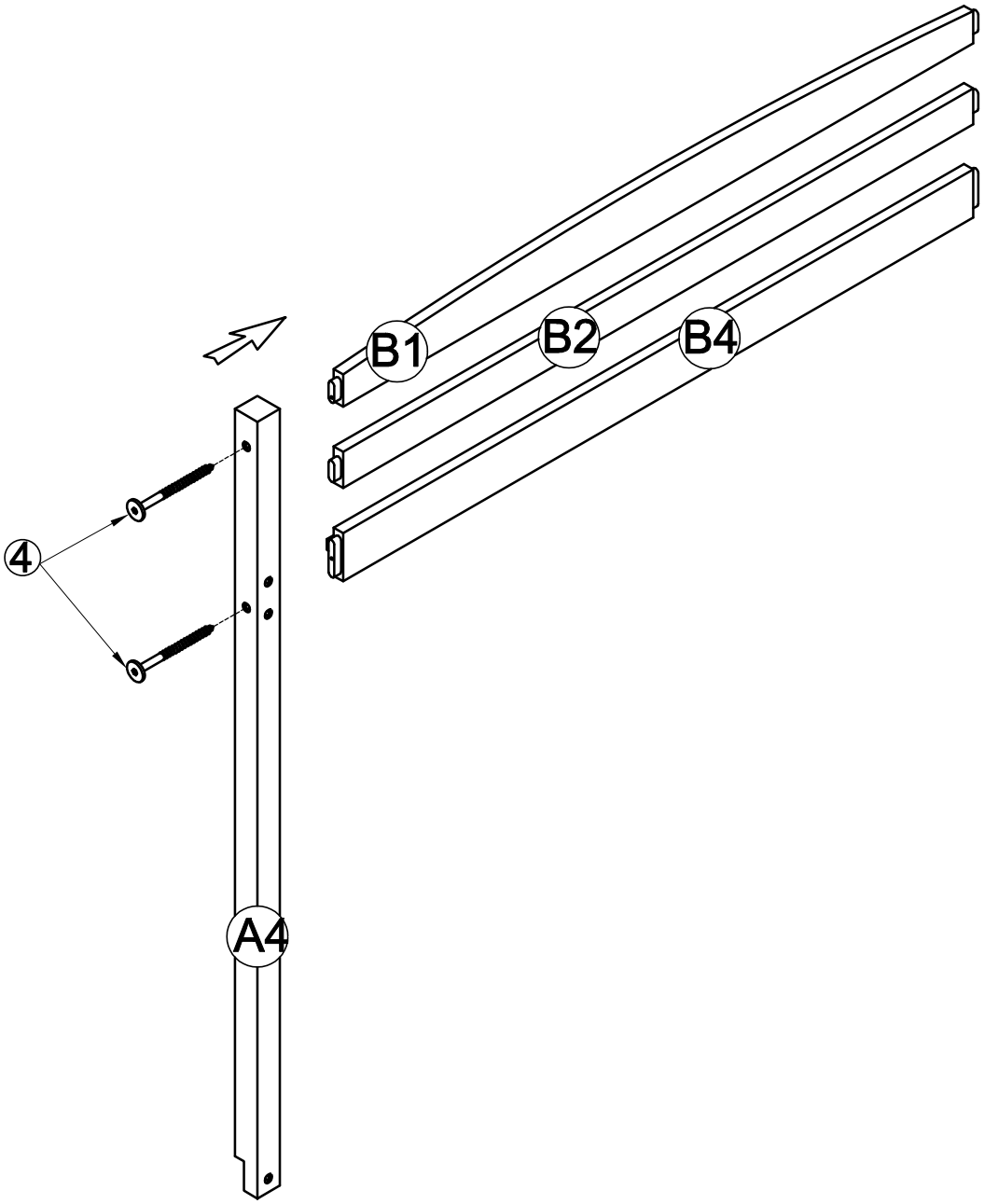

STEP 5: Following below illustration

-Using hardware #4 connect B1.B2,B3 Woodbar with A3 Leg

4

2(pcs)

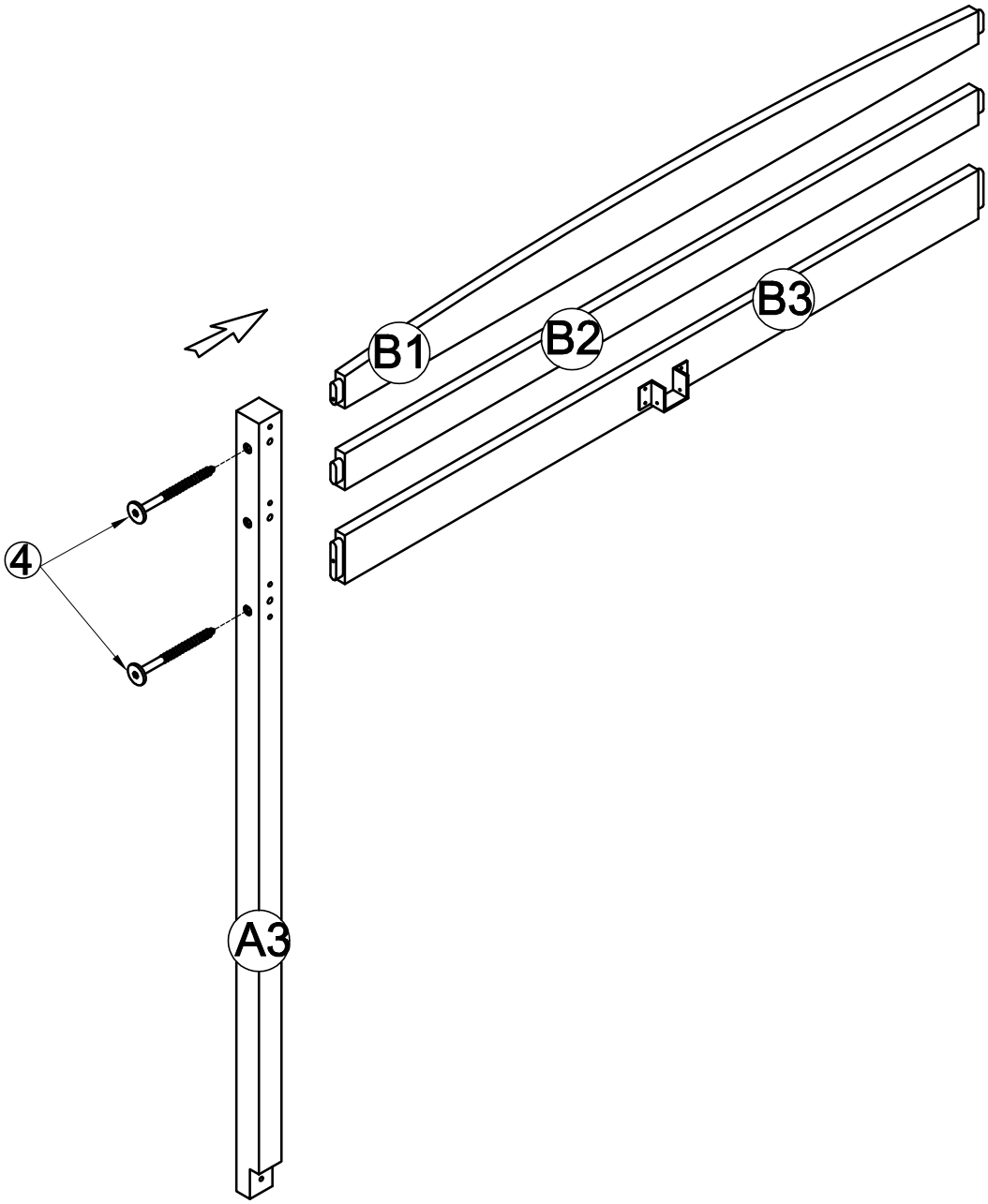

STEP 6: Following below illustration Using hardward #7, #12 and dowel #2

follow detail view to Assembly Bottom bed's Headboard (Completed on step 2) and Footboard (Completed on step 1) with siderail C8,C9.Look at detail view for more detail

12	7	2
8(pcs)	8(pcs)	4(pcs)

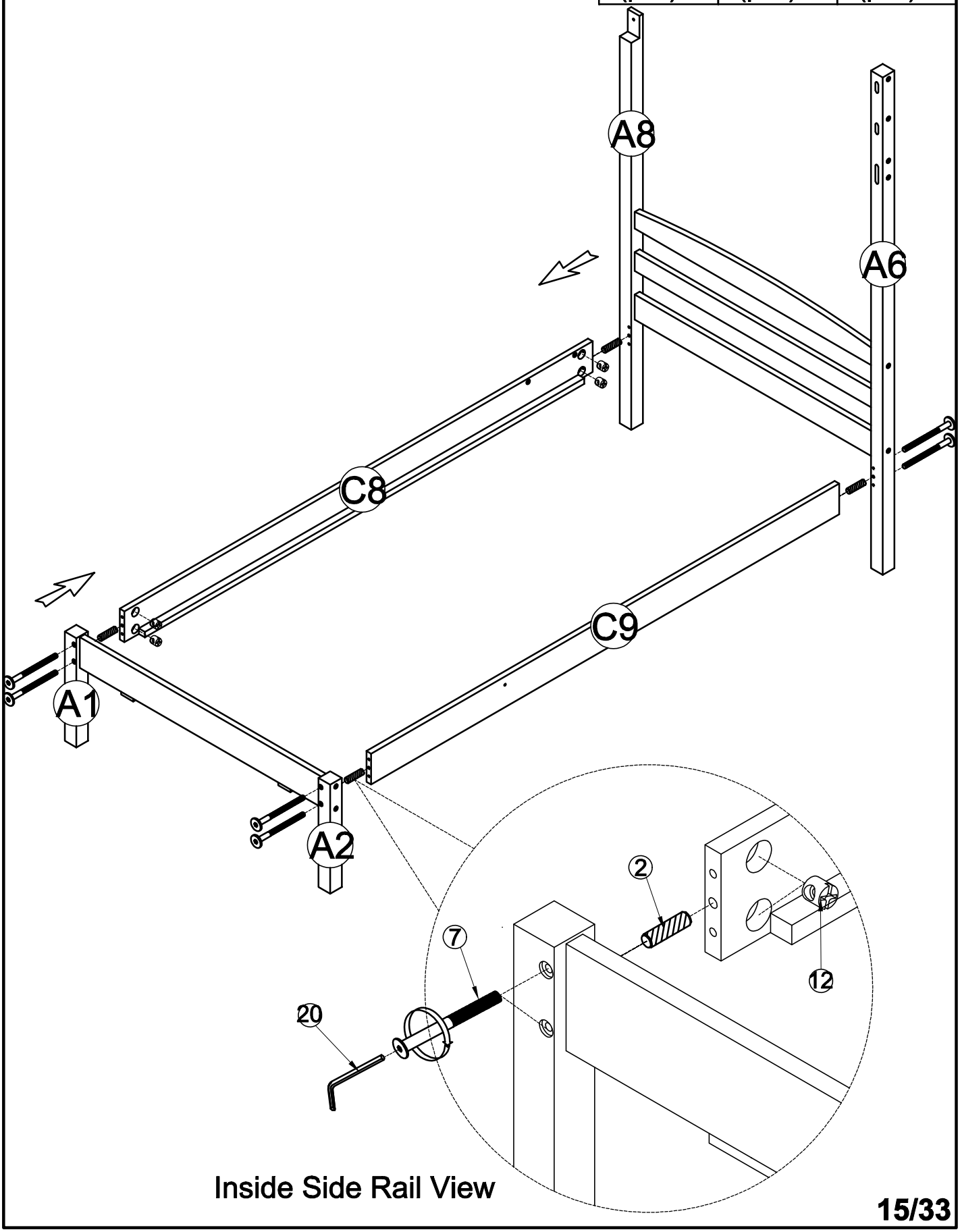

Inside Side Rail View

STEP 7: Following below illustration

-Using hardware #4,#9,#10 connect Frame(completed on step 4) withFrame (completed on step 6)

10	9	4
1(pcs)	1(pcs)	2(pcs)

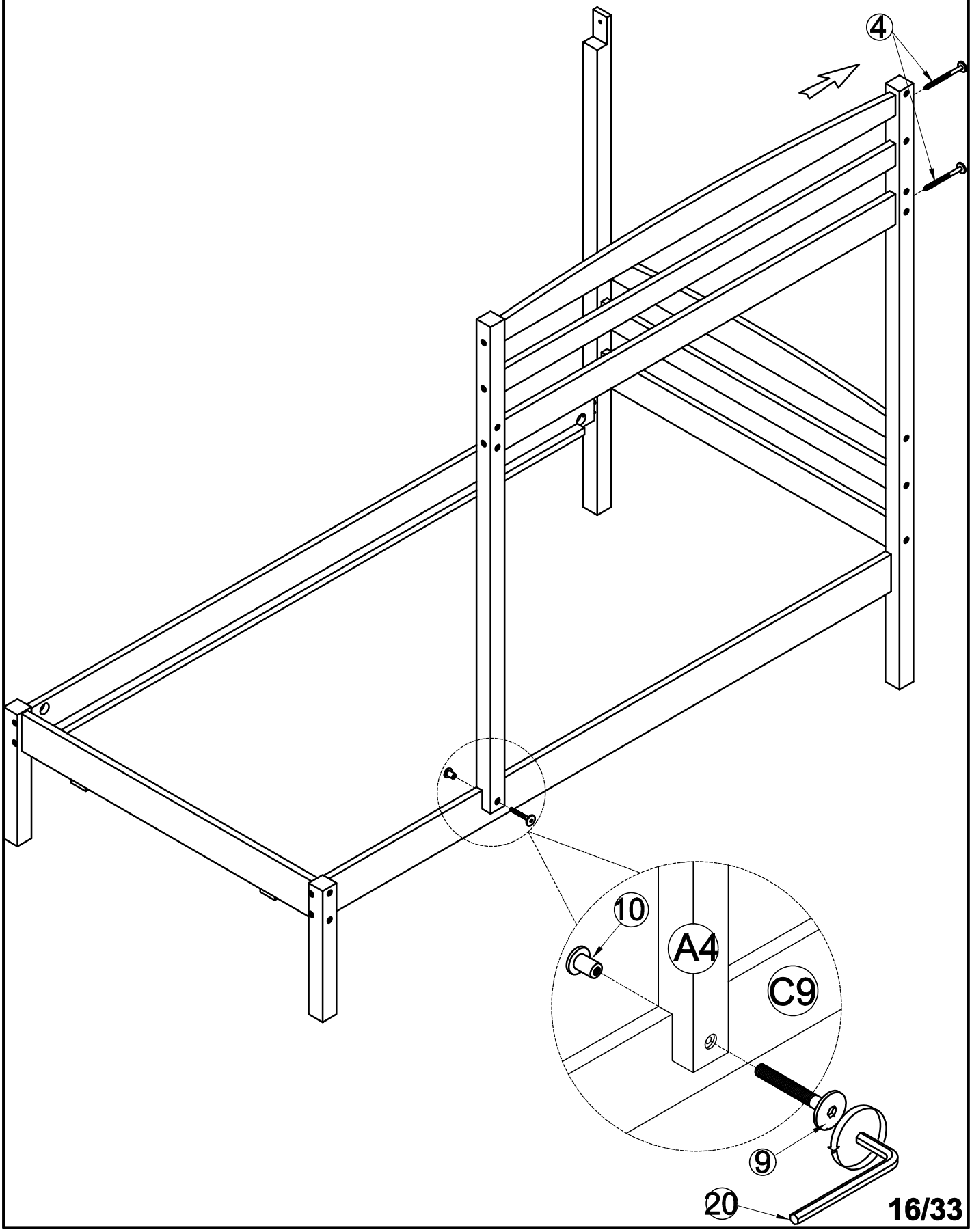

STEP 8: Following below illustration:

Screw 7slats D2 with Side Rail C8,C9 by using hardward #1.

-Look at detail view for more detail

1

14(pcs)

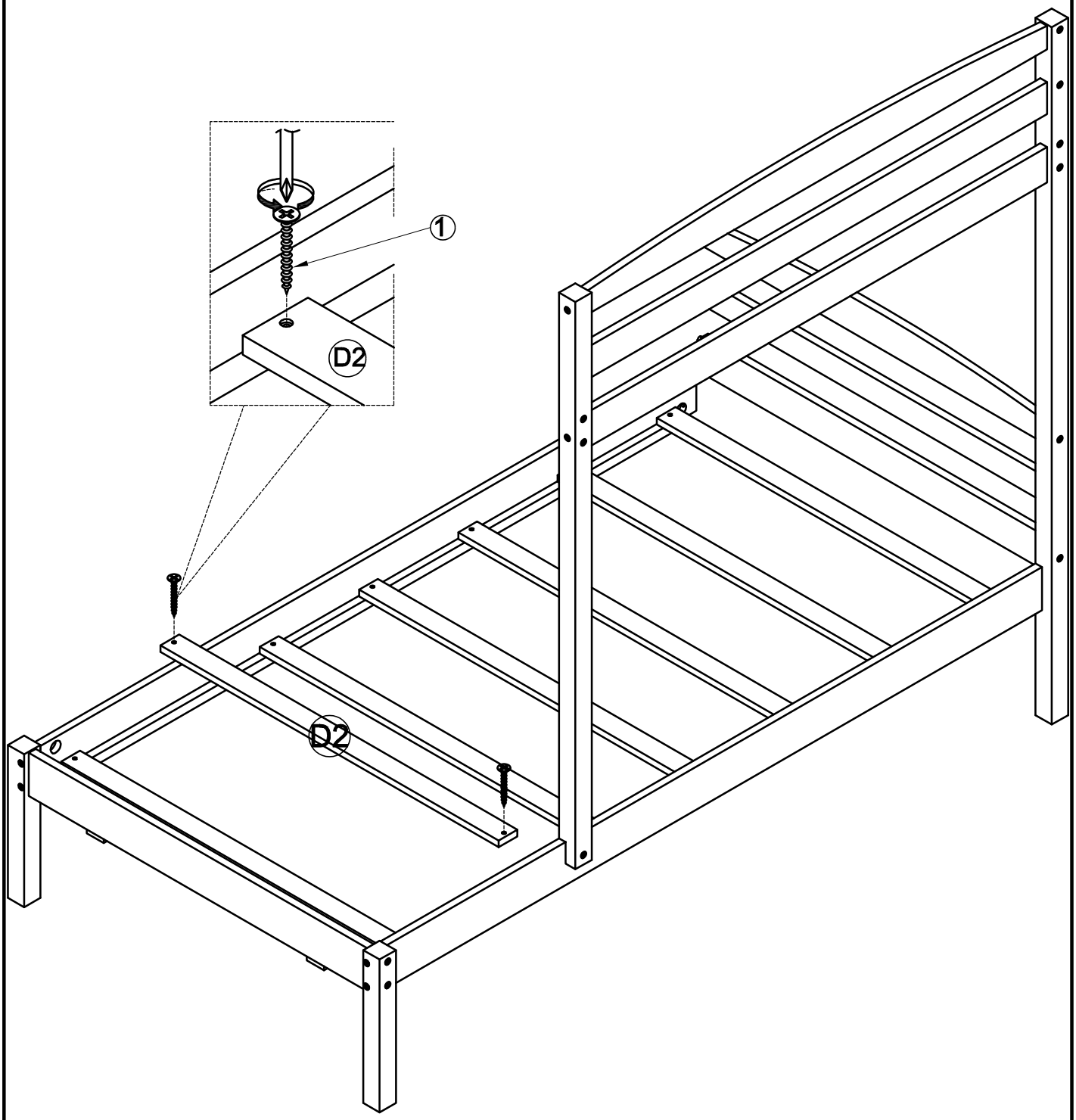

STEP 9: Following below illustration Using hardward #7, #12 and dowel #2

follow detail view to Assembly Bottom bed's Headboard (Completed on step 2) and Footboard (Completed on step 1) with siderail C6,C7.Look at detail view for more detail

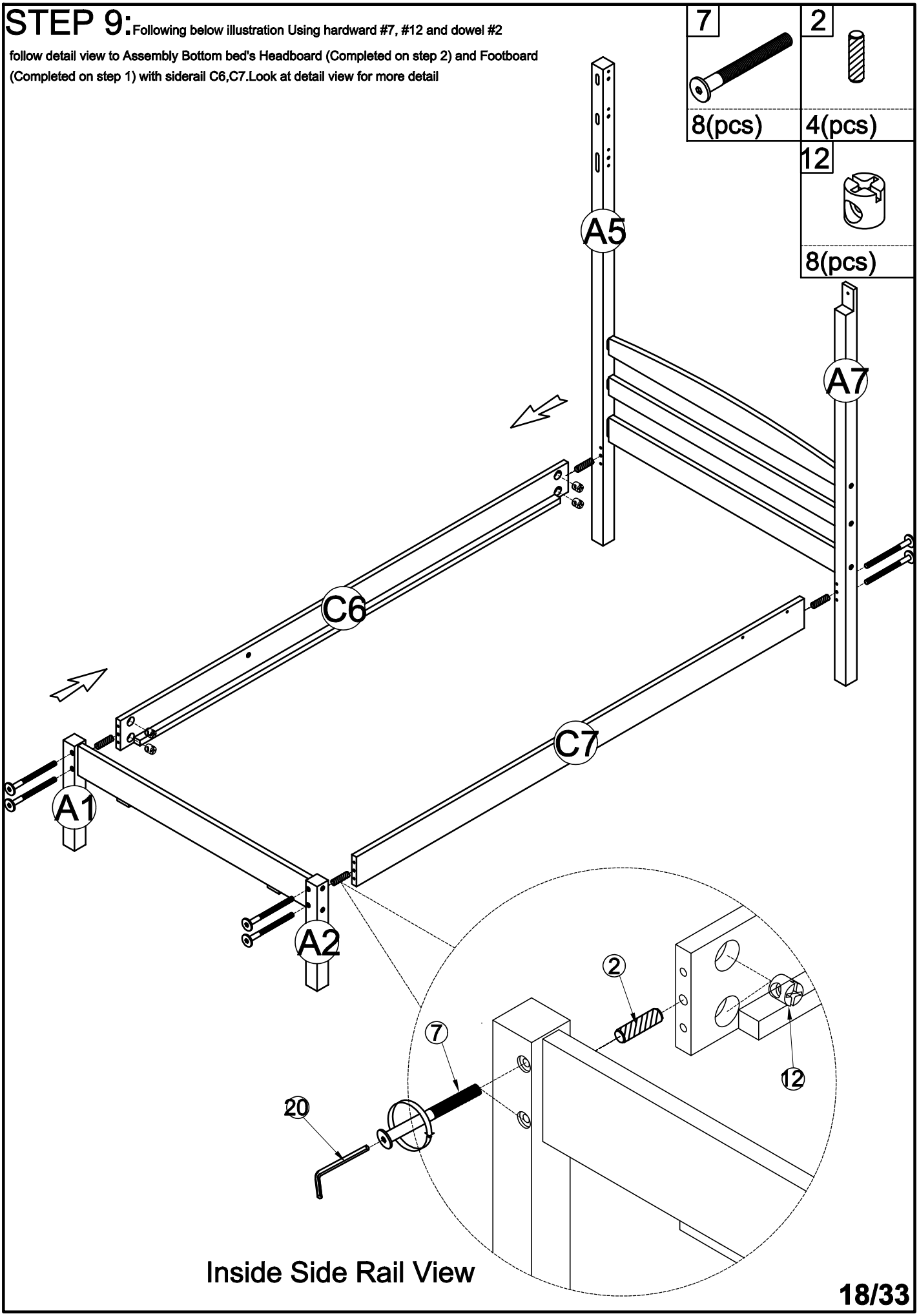

STEP 10: Following below illustration

-Using hardware #4,#9,#10 connect Frame(completed on step 5) withFrame (completed on step 9)

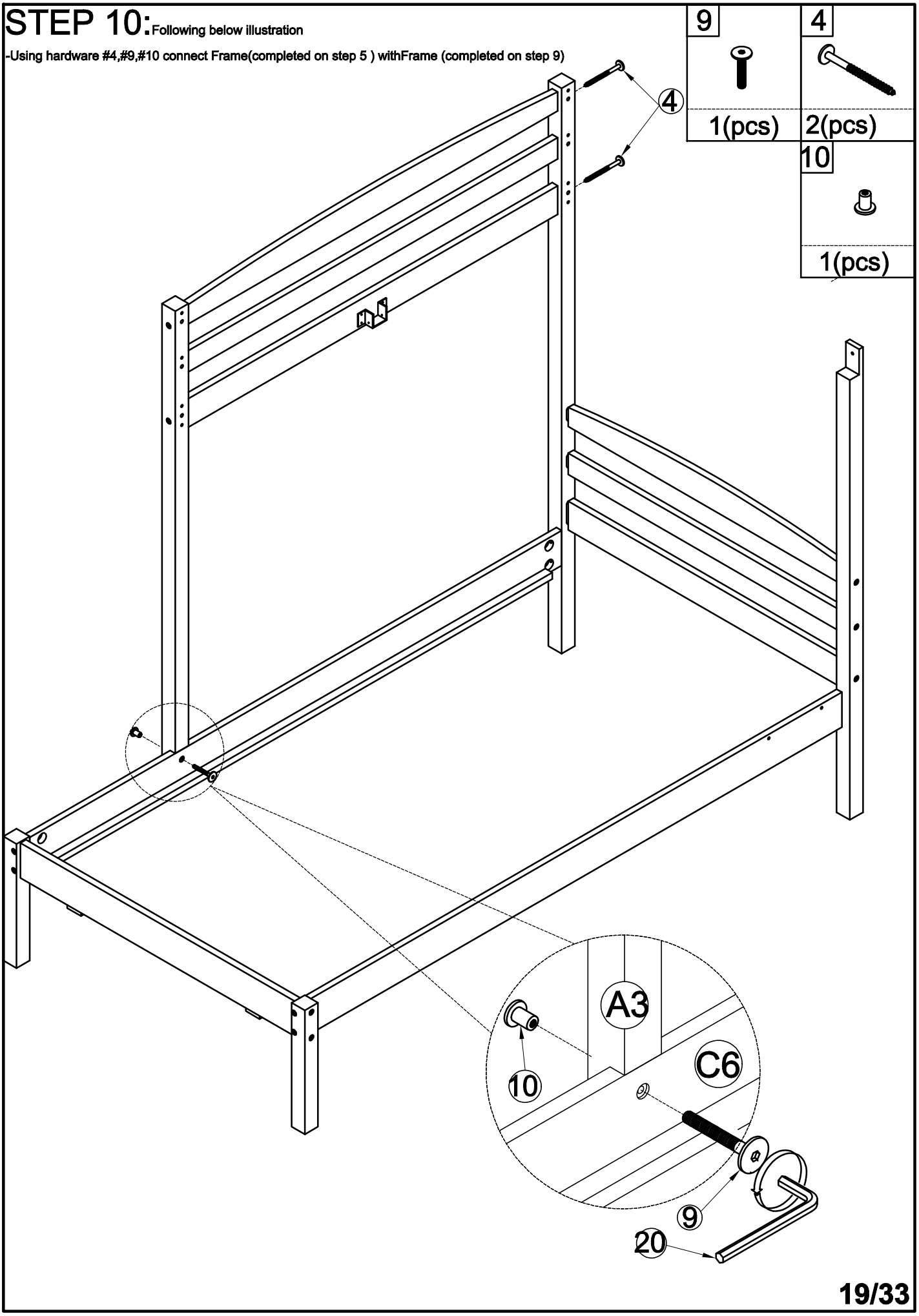

STEP 11: Following below illustration:

Screw 7 slats D2 with Side Rail C6,C7 by using hardward #1.

-Look at detail view for more detail

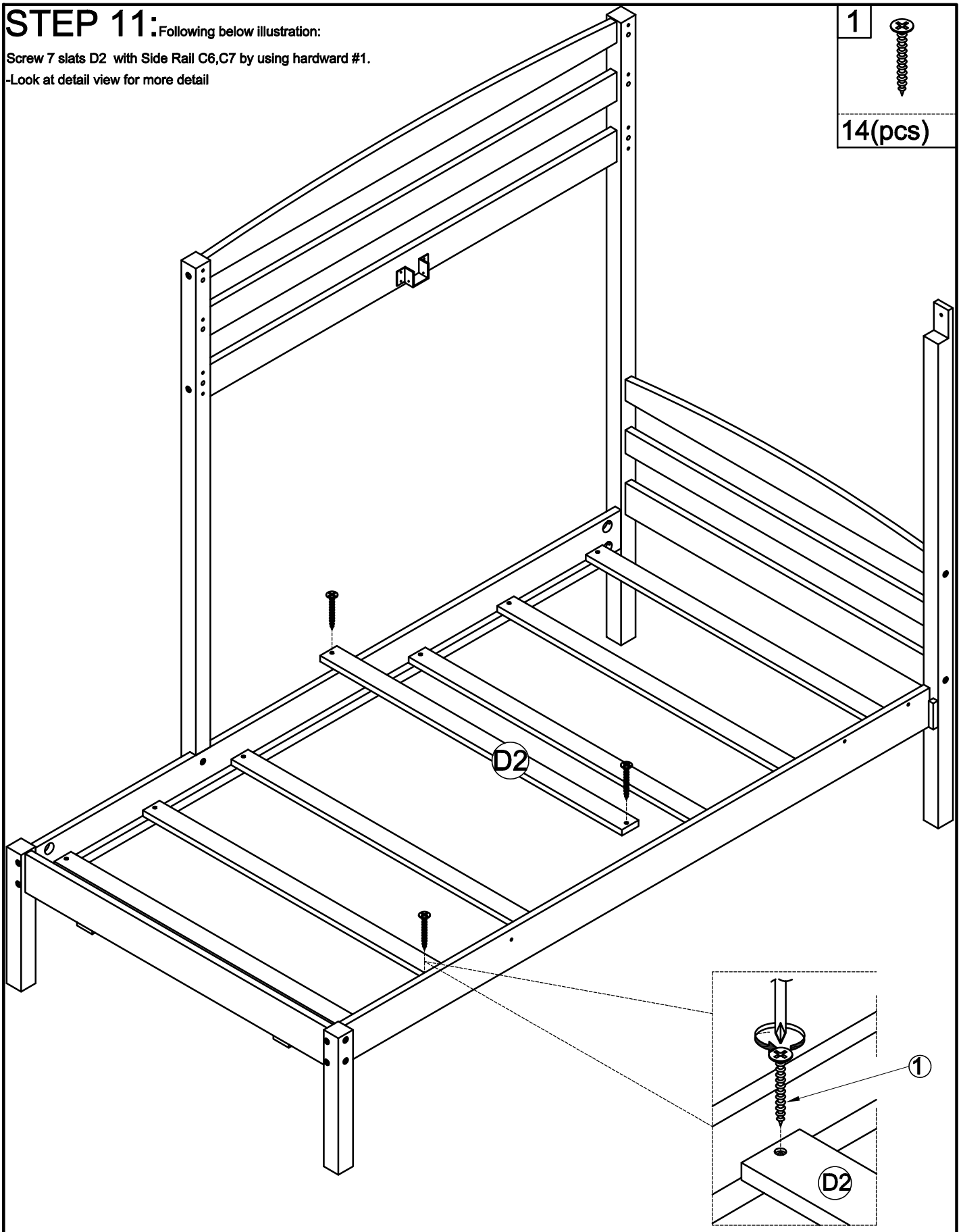

STEP 12: Following below illustration:

-Using hardward #24 to connect Guardrail C1(x2),C3(x2) Siderail C4.1,C4.3 With C5,C11

-Using hardward #10,#11,#8 to connect Guardrail C2(2) and Siderail C4,C4.2 with rail C5,C10

-Look at detail view for more detail

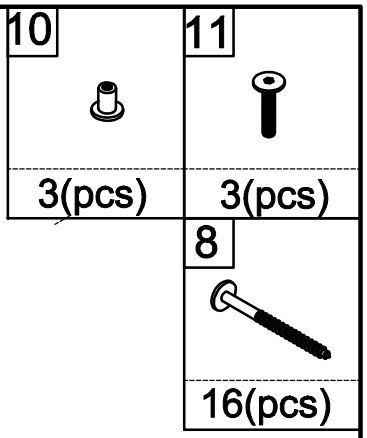

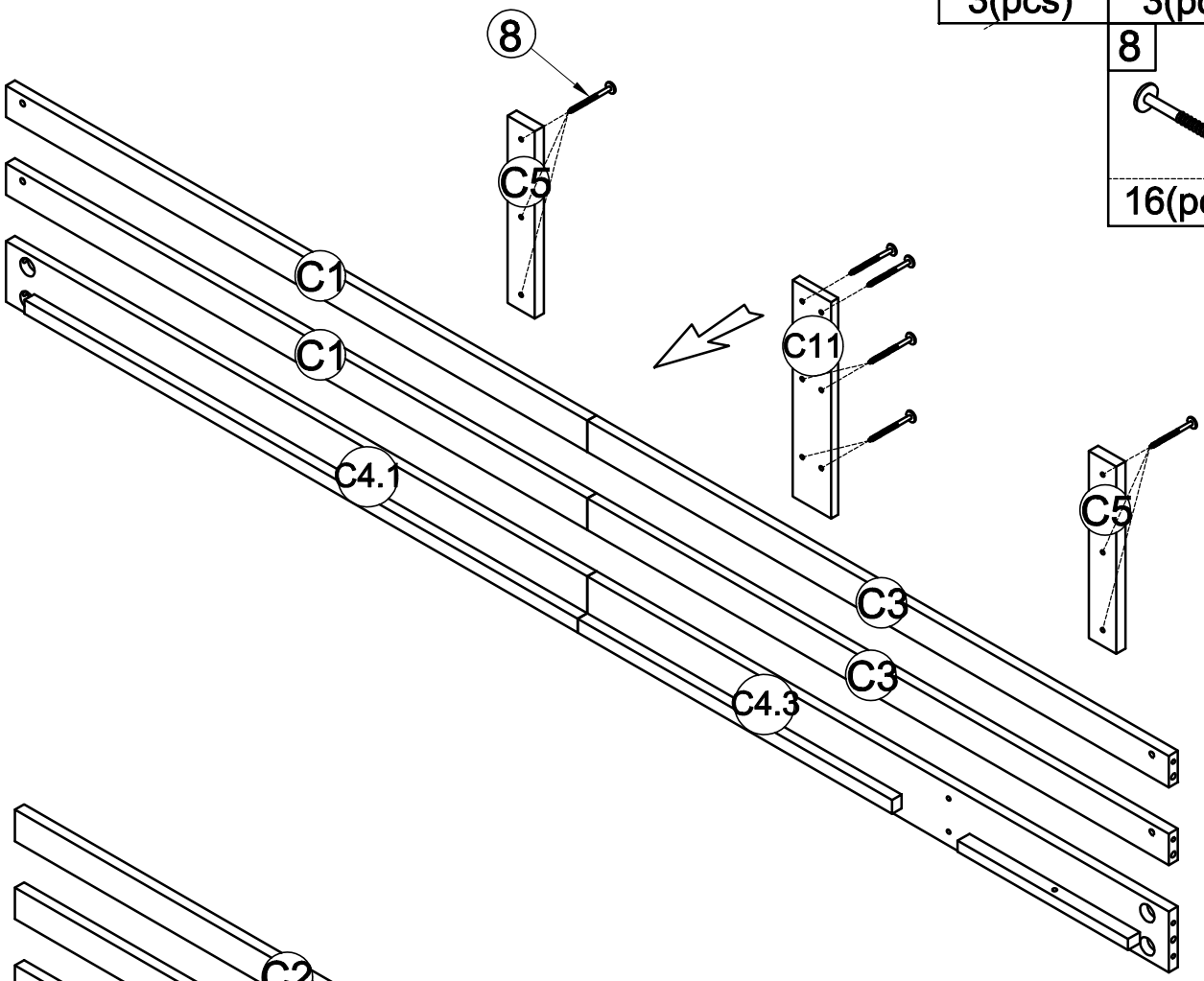

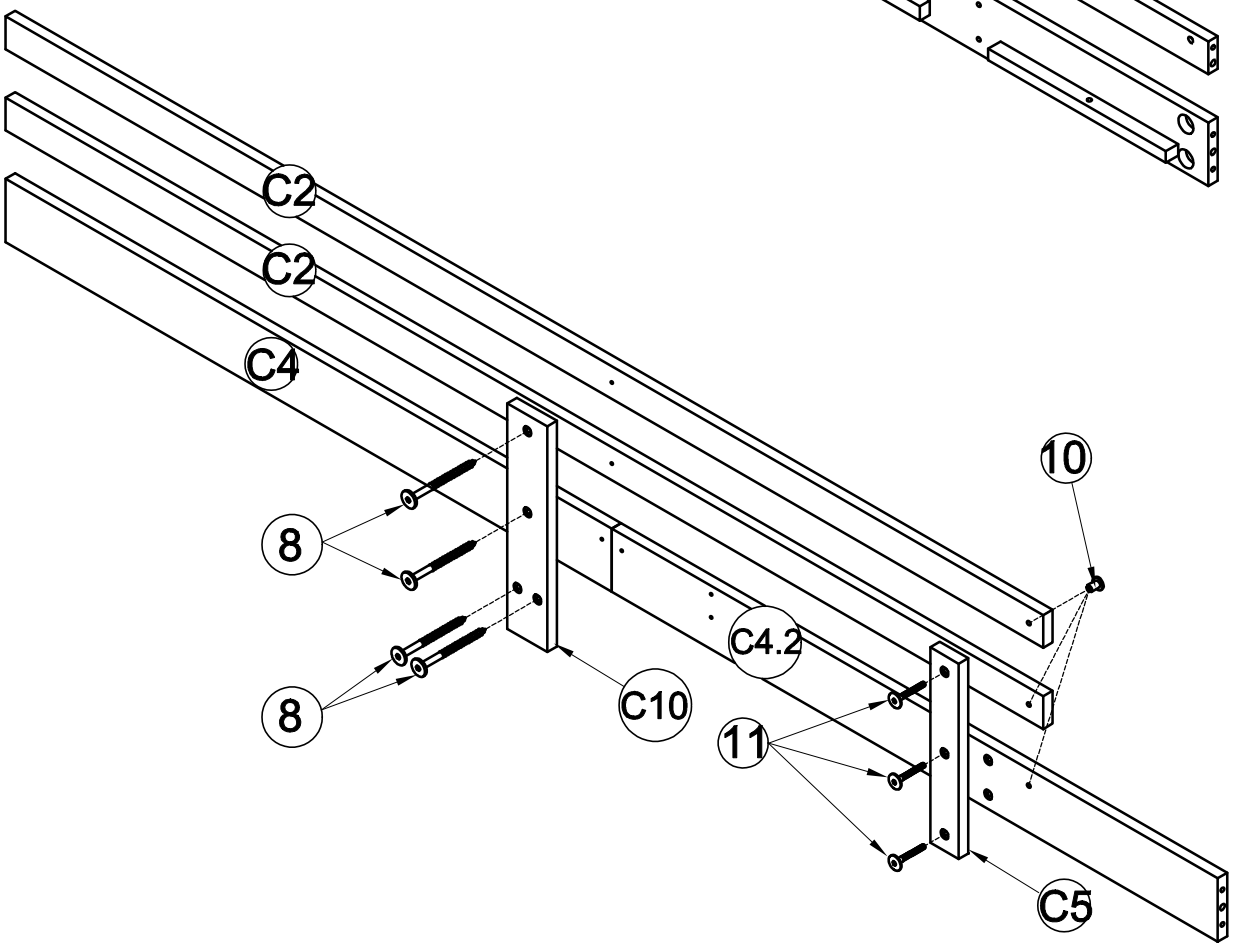

STEP 13: Following below illustration Using hardward #7,#12,#8 and dowel #2 follow detail view to Assembly Frame (Completed on step 11) and Frame (Completed on step 8) with Frame (Completed on step 12).Look at detail view for more detail

12	7	2
14pcs	14(pcs)	10(pcs)

8
2(pcs)

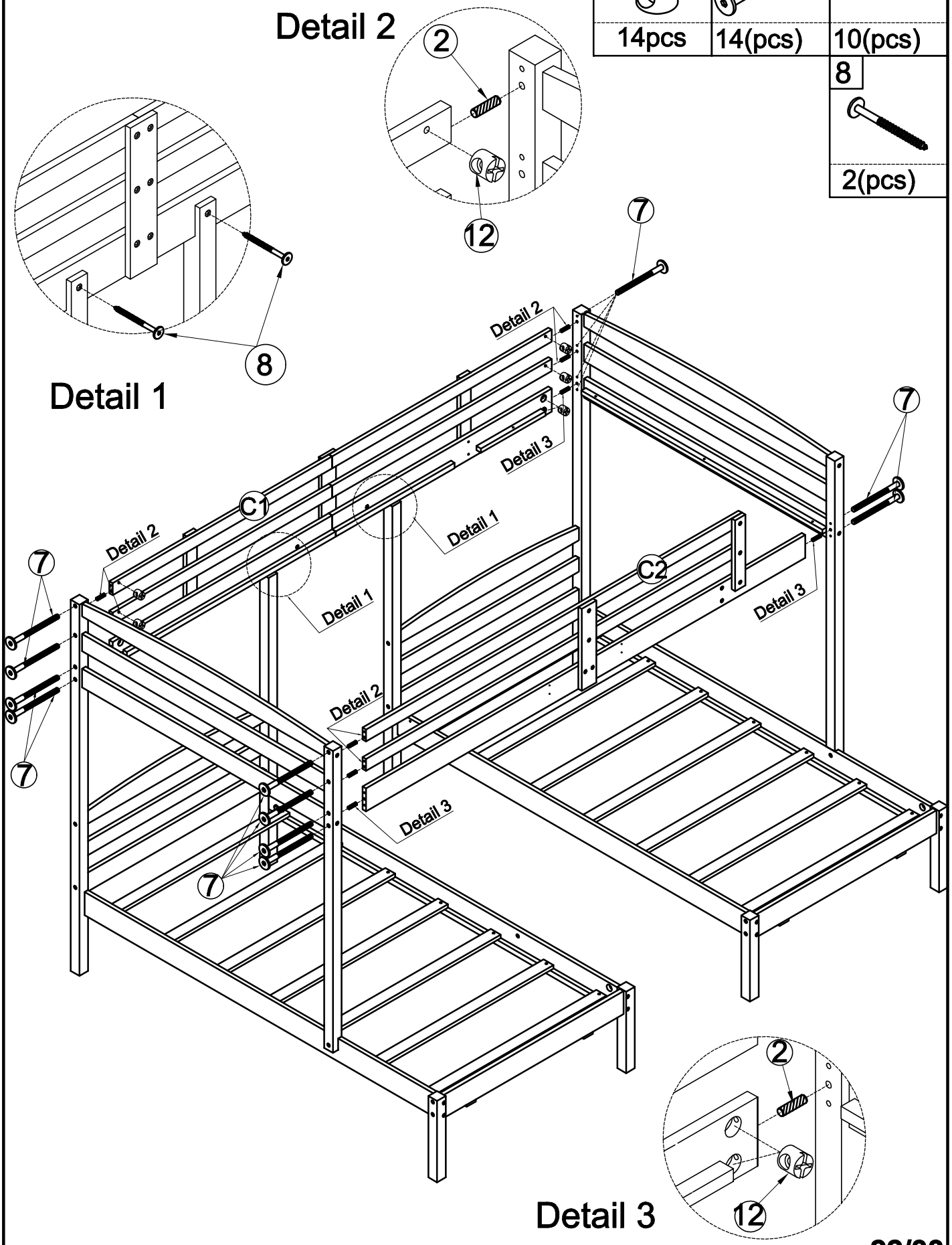

STEP 14: Following below illustration

-Using hardware #10,#11,#13,#8 connect Frame(completed on step 13) with Frame (completed on step 3) and A9,A10 Legs

11	13
2(pcs)	4(pcs)
10	8
2(pcs)	4(pcs)

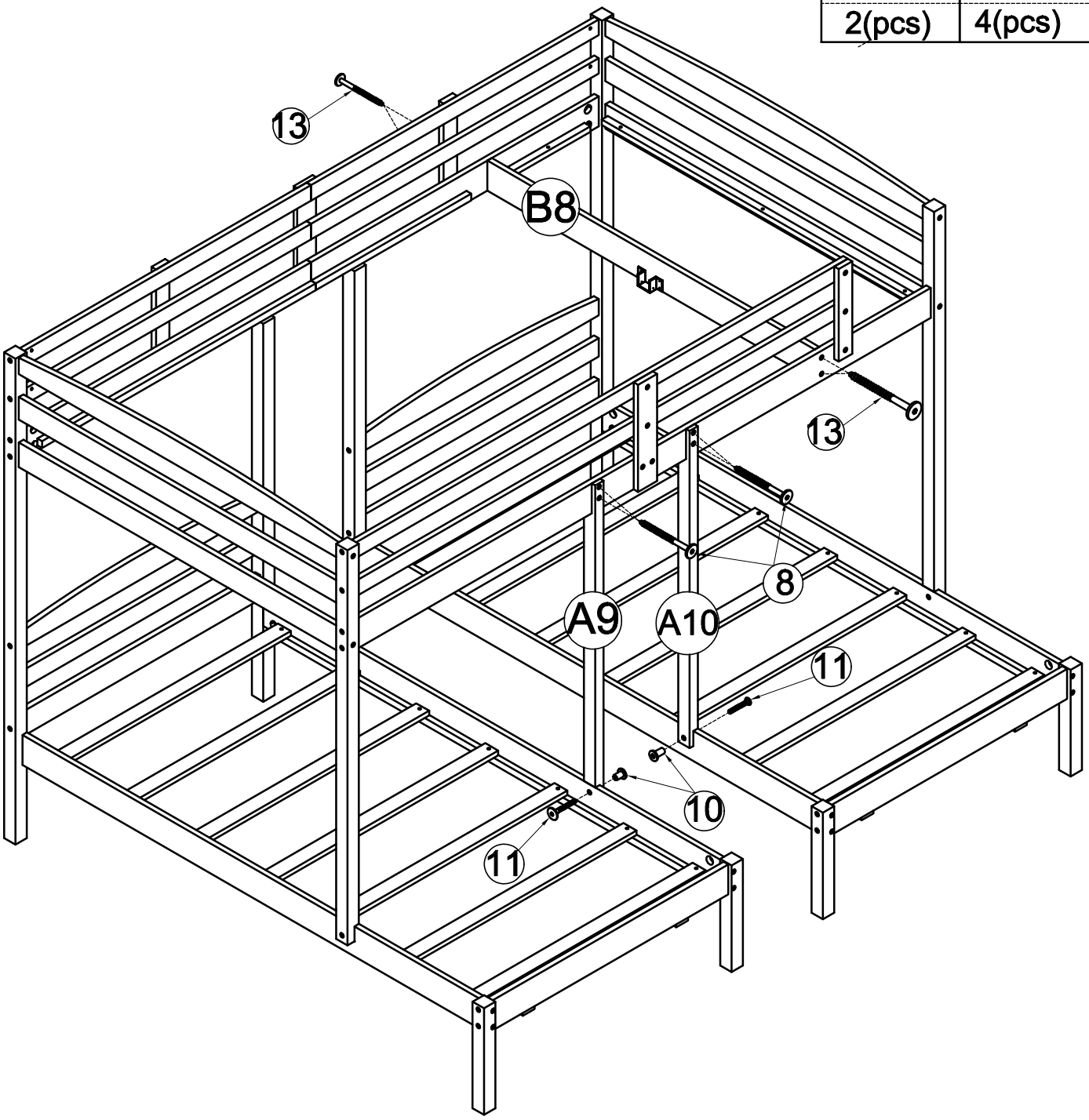

STEP 15: Following below illustration

-Using hardware #11 connect Frame(completed on step 14) with Panel B9

11

8(pcs)

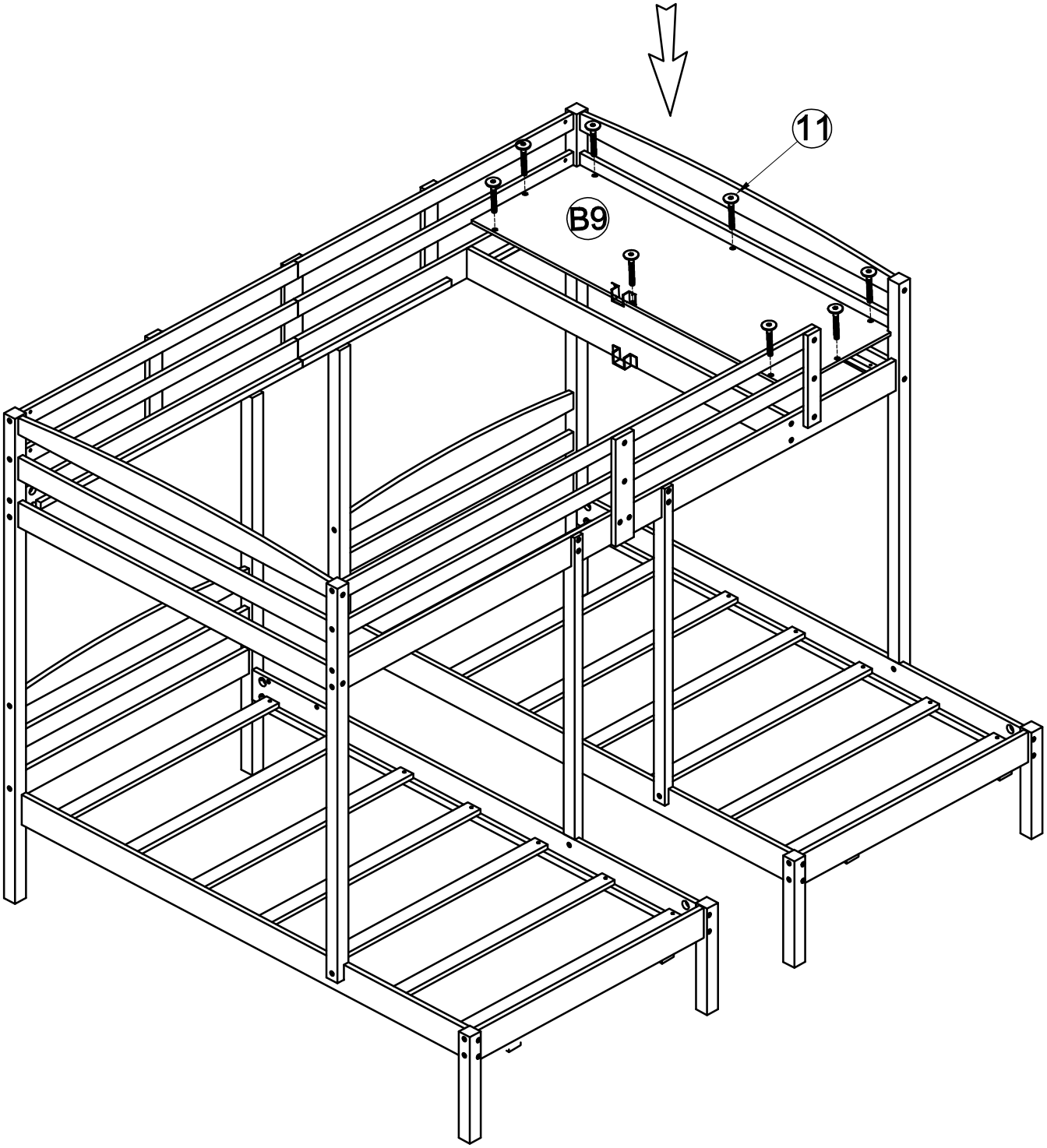

STEP 16: Following below illustration:

-Put Support Slat (D3) on Bracket

-Assembly 14 slats (D1) using hardward #1.

-Look at detail view

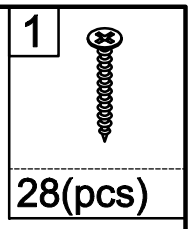

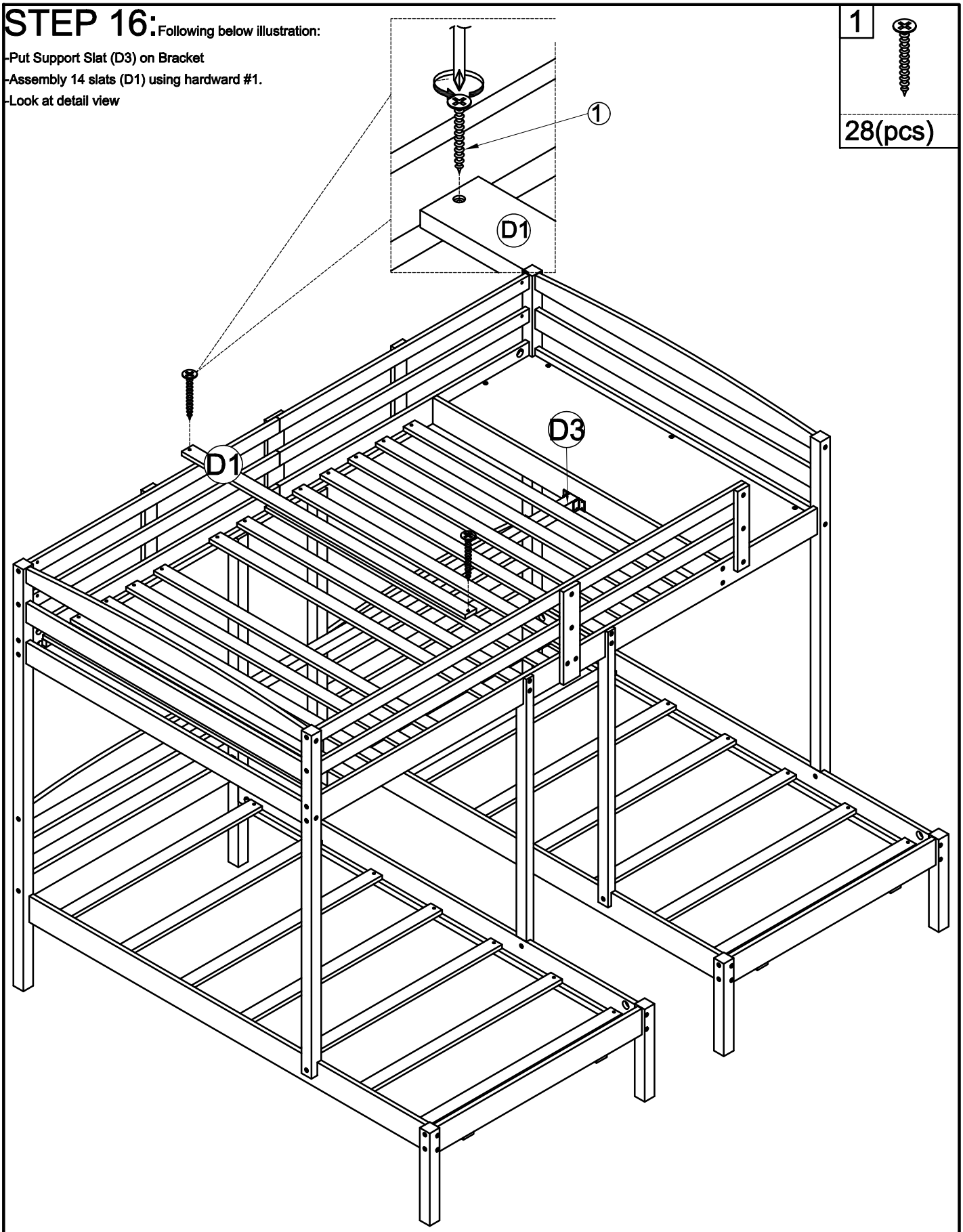

STEP 17-1: Following below illustration Using hardward #13,Dowel 2 to Assembly Ladder.

Look at detail view for more detail

2	13
24(pcs)	12(pcs)

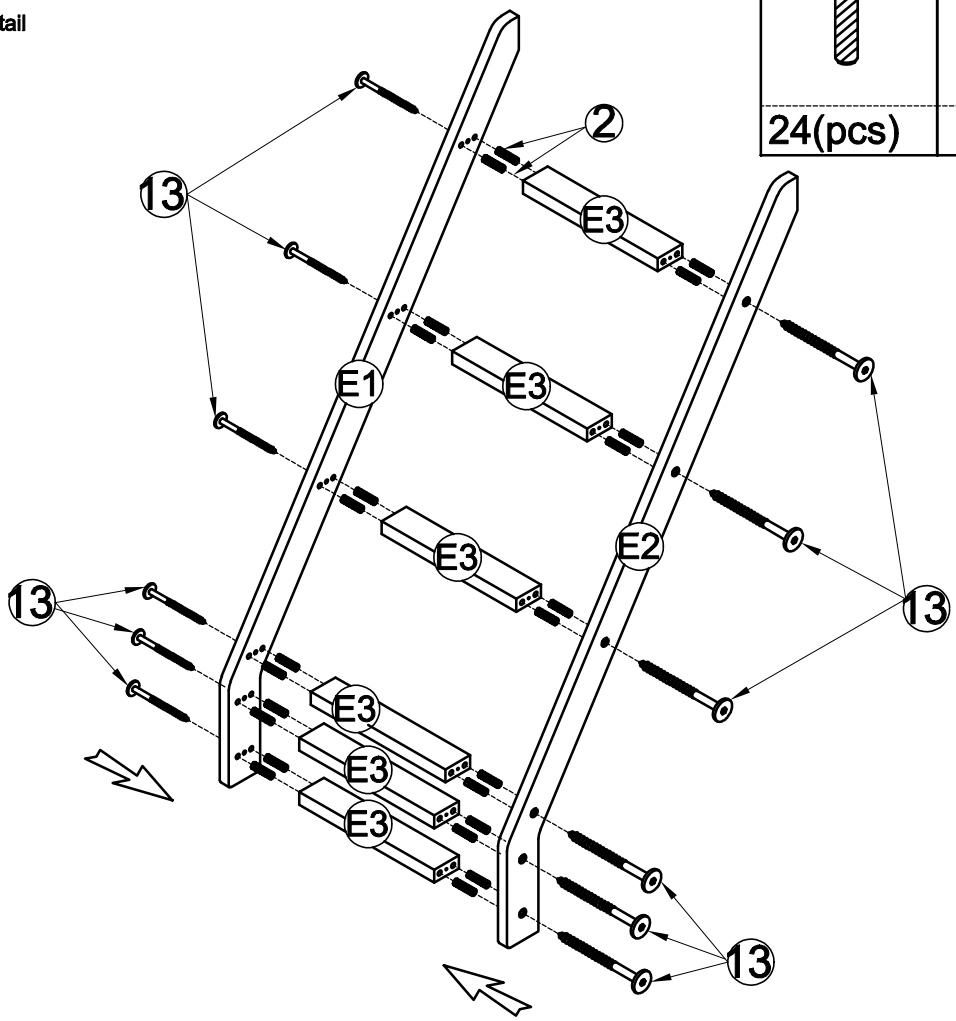

STEP 17-2: Following below illustration

-Using hardward #6 connect Steel Bracket (#14) with Frame(completed on step17-1)

-Look at detail view for more detail

6	14
8(pcs)	4(pcs)

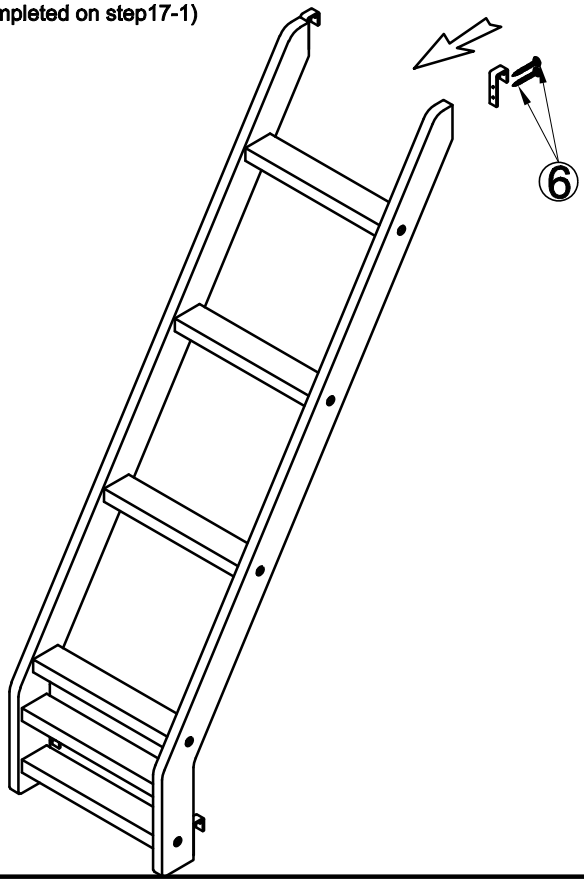

STEP 18: Following below illustration

-Using hardward #6 connect Ladder (completed on step 17-2)with Frame(completed on step16)

-Look at detail view for more detail

6

4(pcs)

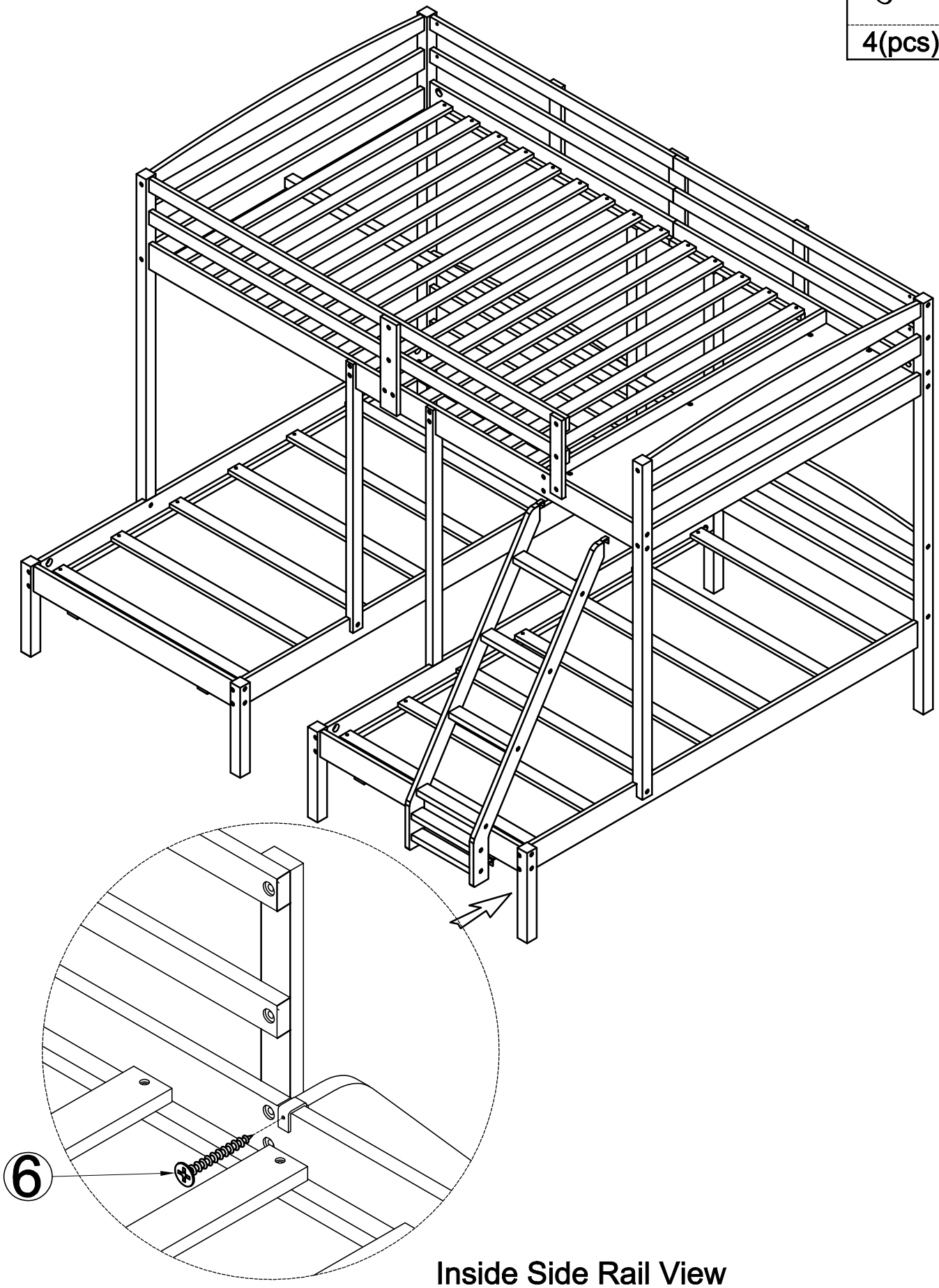

Inside Side Rail View

STEP 19-1: Following below illustration:

-Using hardward #12,#15 and dowel #16 to connect H2,H3 panels with H1 panel

15	16	12
4(pcs)	4(pcs)	4pcs

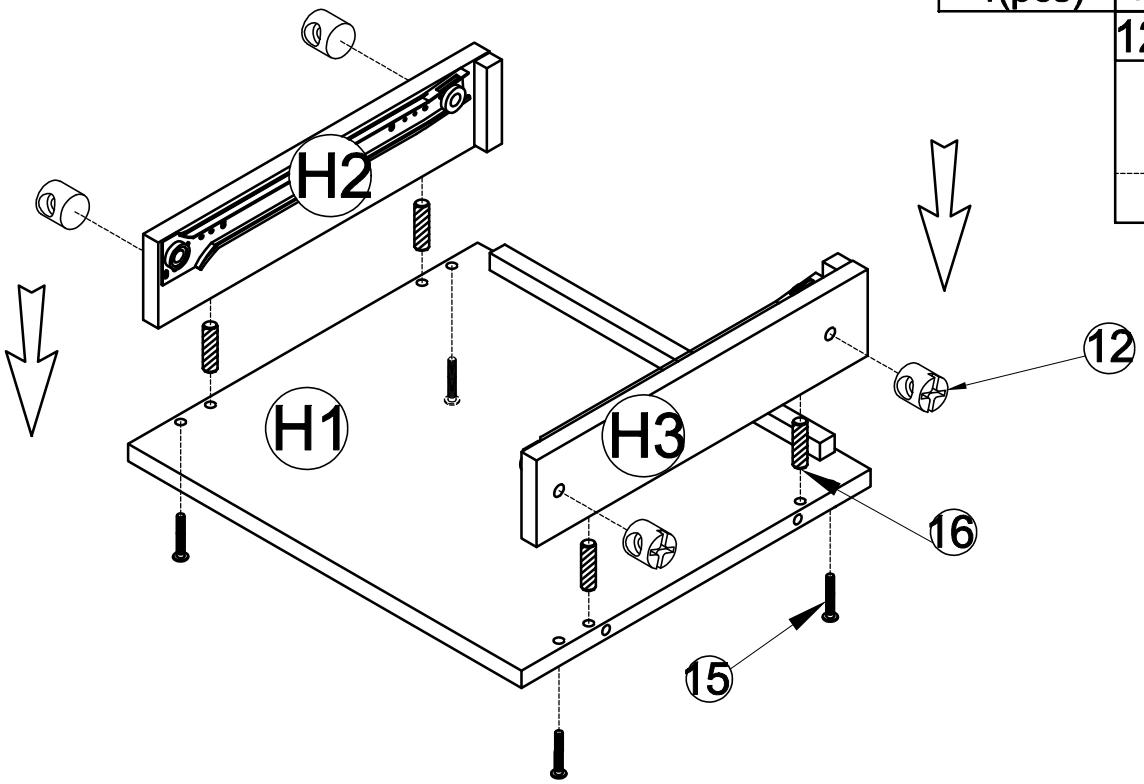

STEP 19-2: Following below illustration:

-Using hardward #17 to connect Frame(completed on step 19-1) with Back panel H4

17
3(pcs)

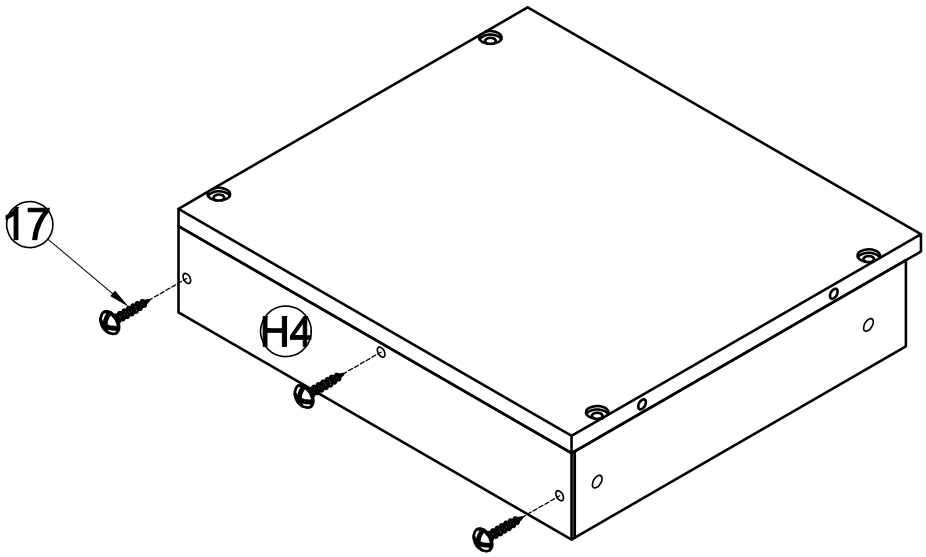

STEP 20: Following below illustration:

-Using hardward #12,#15 to connect Frame (completed on step 18)with Frame (completed on step 19-2)

12	15
4pcs	4(pcs)

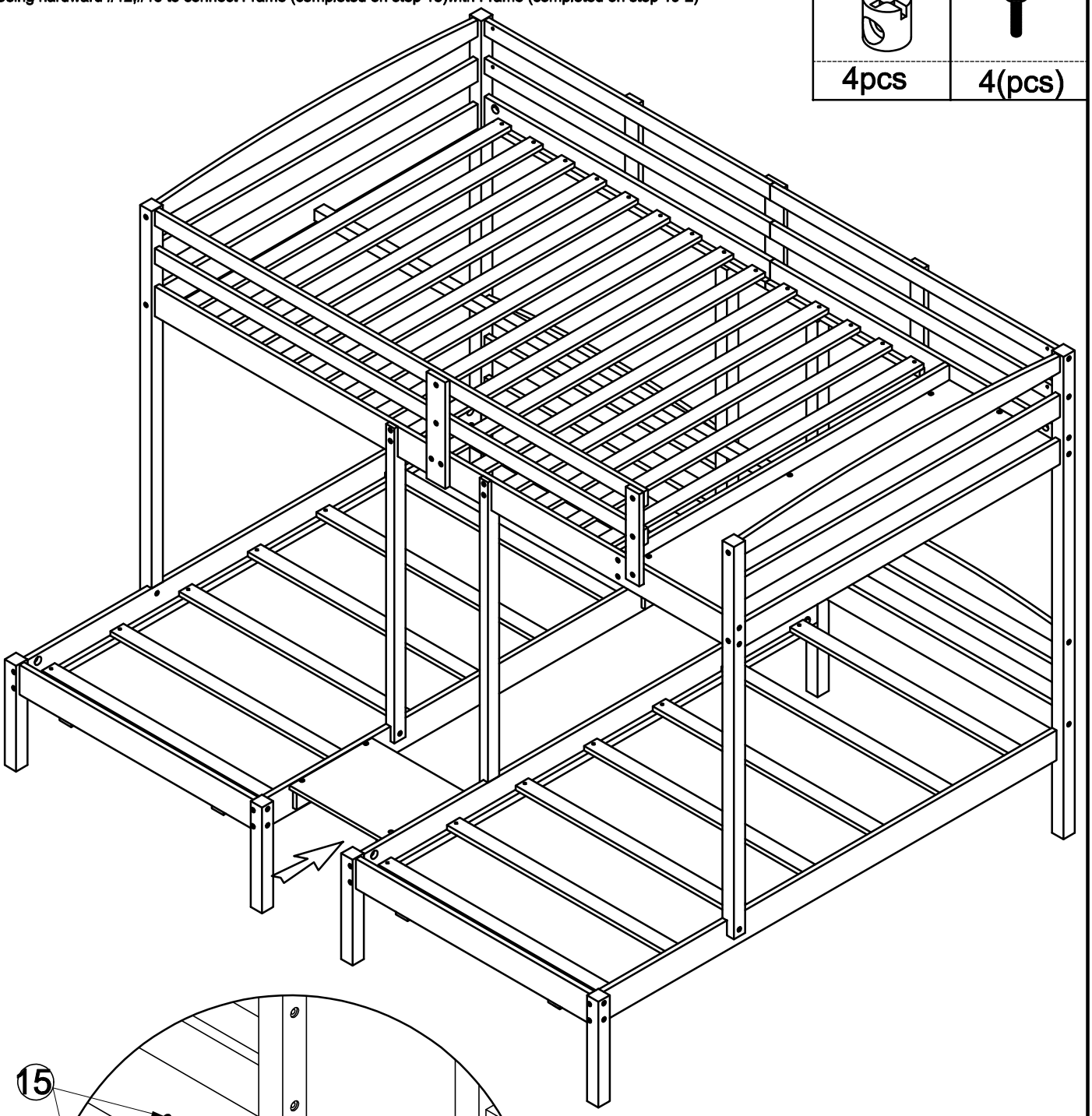

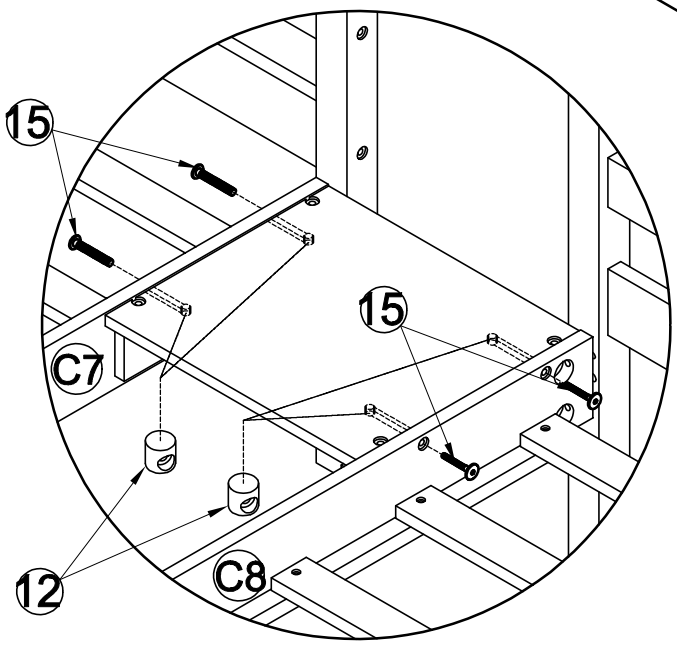

STEP 21-1:

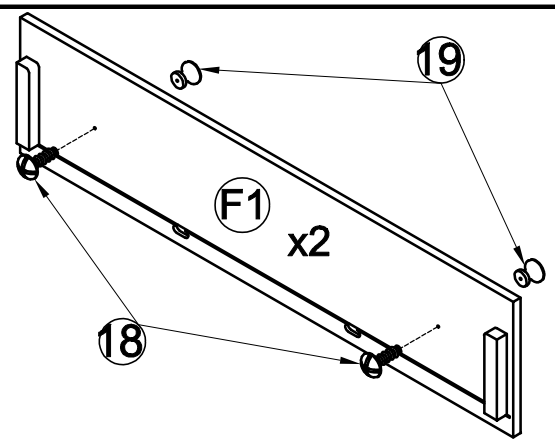

19	18
4(pcs)	4(pcs)

STEP 21-2:

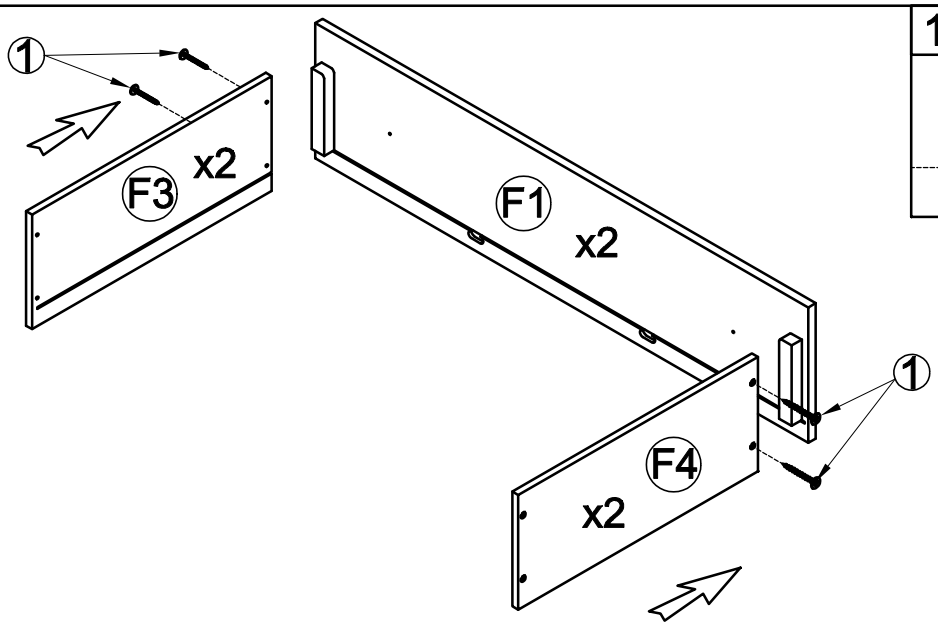

1
8(pcs)

STEP 21-3:

1
12(pcs)

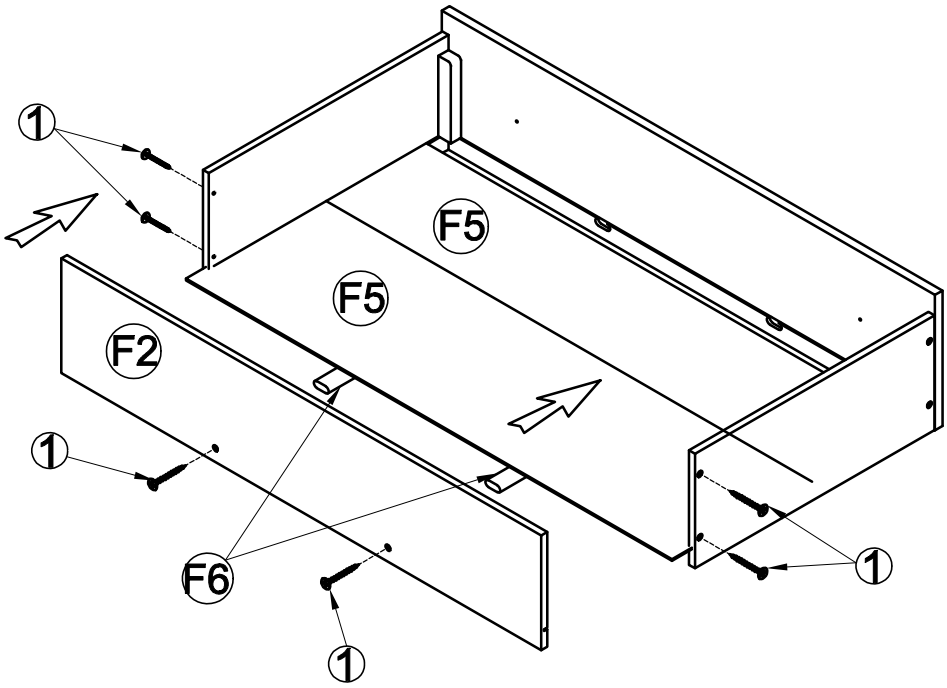

STEP 21-4

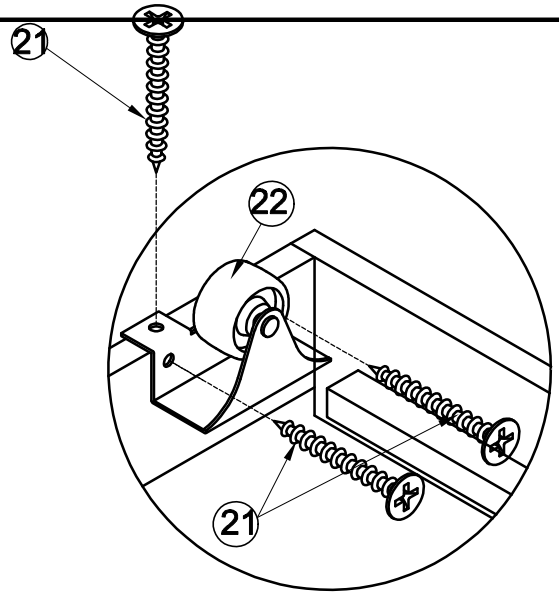

22	21
2x4(pcs)	2x12(pcs)

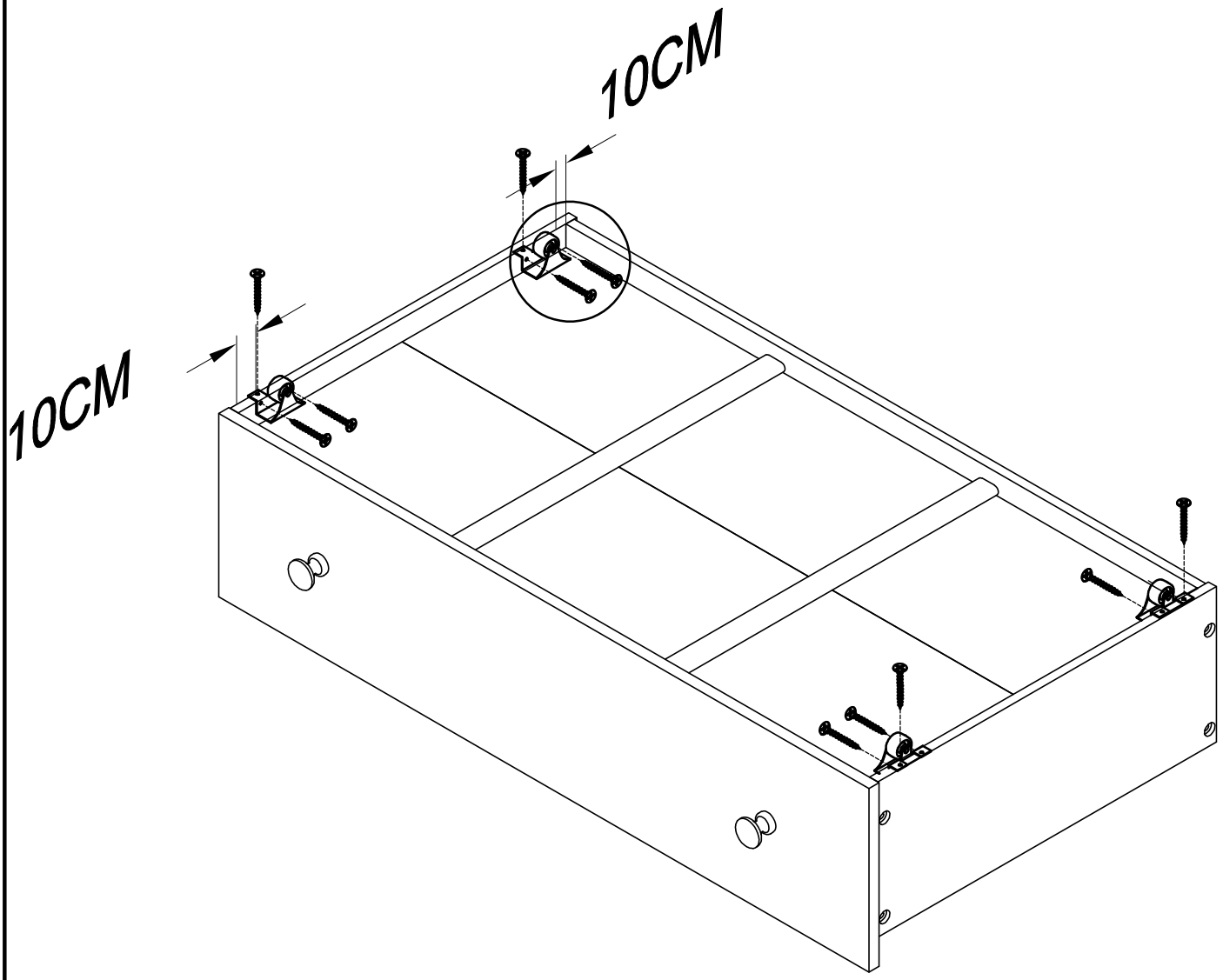

STEP 22-1:

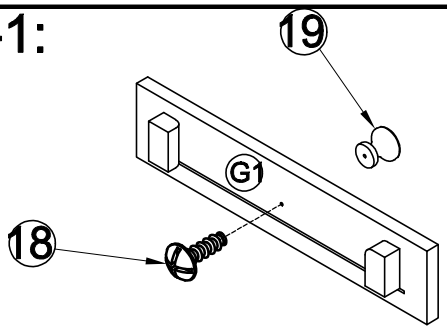

19	18
1(pcs)	1(pcs)

STEP 22-2:

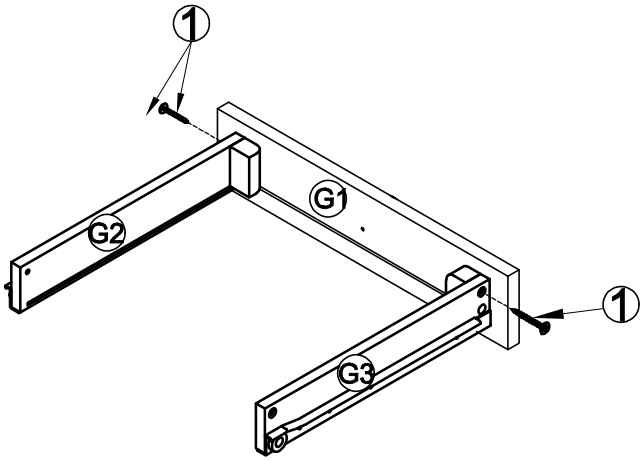

1
2(pcs)

STEP 22-3:

1
3(pcs)

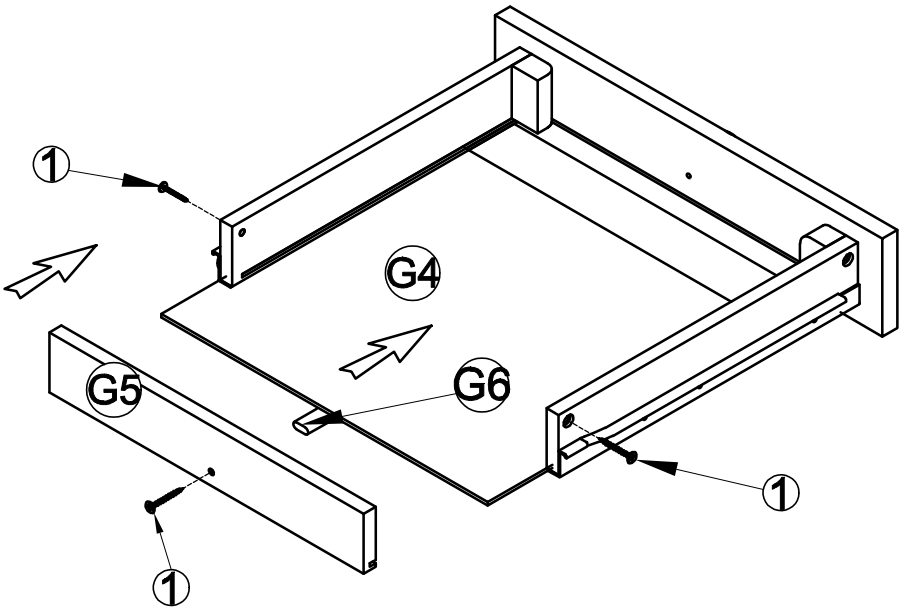

STEP 23: CONGRARULATION. YOU HAVE COMPLETED THE BED.
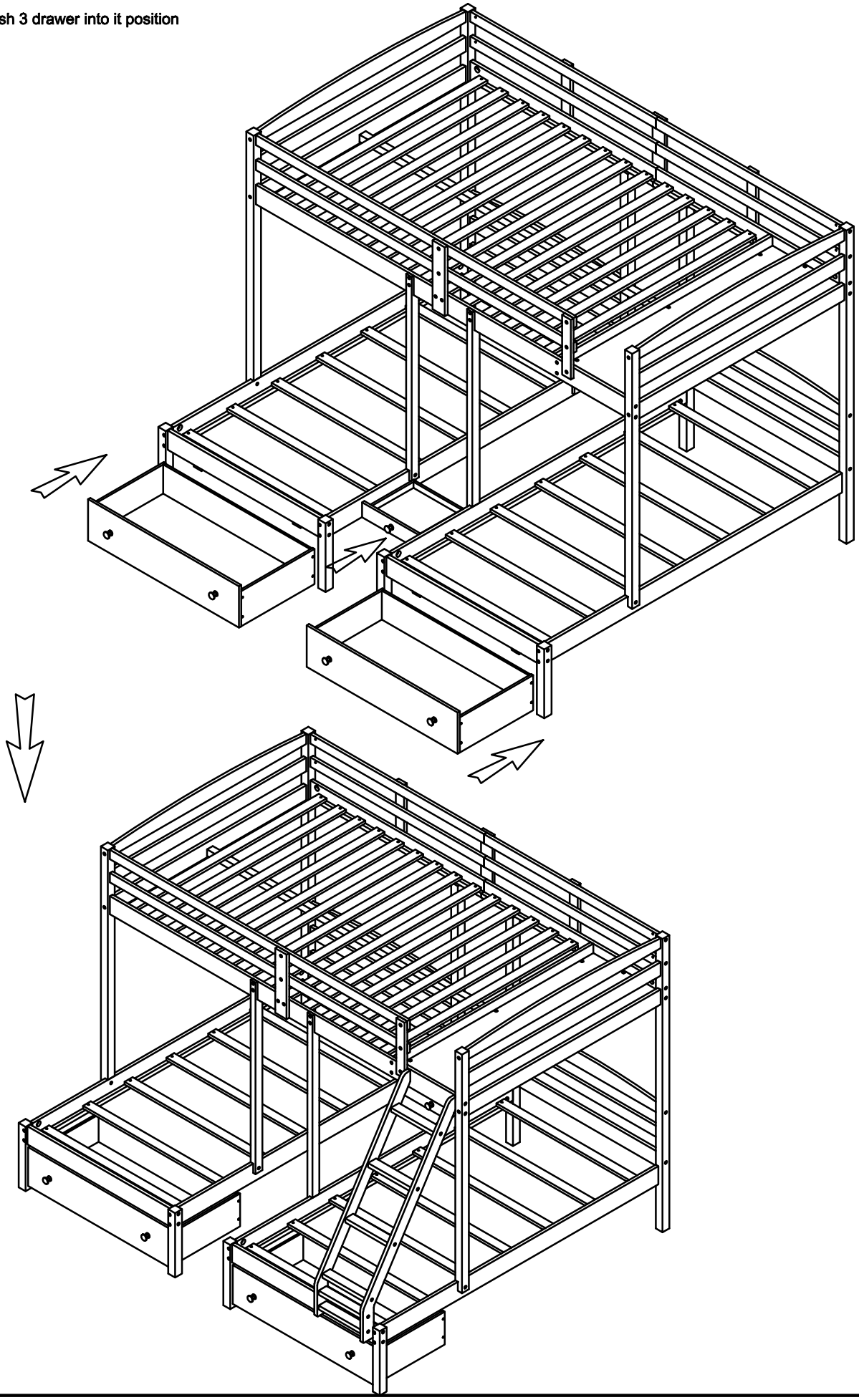
Push 3 drawer into it position