ASSEMBLY INSTRUCTIONS

Bathroom Rack

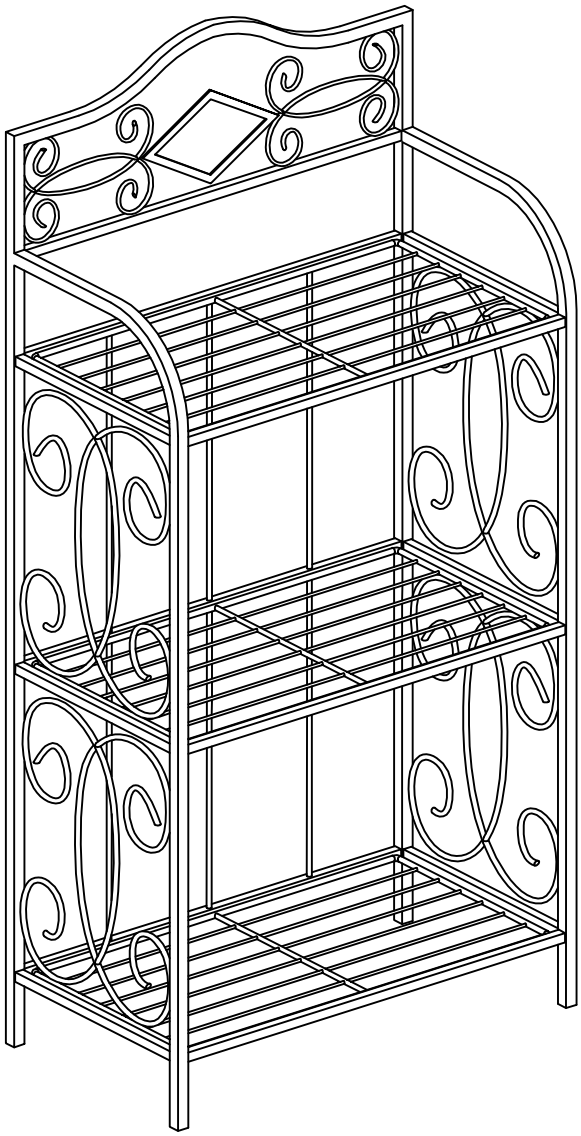

NOTE TO CUSTOMERS:

- For ease and speed of assembly we recommend that before you commence each step of the assembly that you identify all the parts required to complete that step.
- We recommend that where possible you allow sufficient space to assemble the item as close as possible to the place where it will be once assembled.
- For the protection of your furniture we recommend that the product is placed on protected surfaces during assembly to prevent any damage.
- During assembly do not over tighten, as this may damage the product.
- Please ensure you retain all the product packaging until the item completely assembled.
- Please periodically check all fittings and re-tighten as necessary.
- It is recommended that this item should be assembled by two adults.

Part List

A1 Quantity of 1  Left Side Frame	A2 Quantity of 1  Right Side Frame	A3 Quantity of 1  Bottom Net Rack	A4 Quantity of 1  Middle Net Rack
A5 Quantity of 1  Top Net Rack	A6 Quantity of 1  Back Frame	A7 Quantity of 1  Connect Bar	A8 Quantity of 3 Back Support Bar

Hardware List

B1 Quantity of 14  Bolt Dia:¼" x 1" L	(NOT INCLUDED) 

STEP 1

B1  8pcs

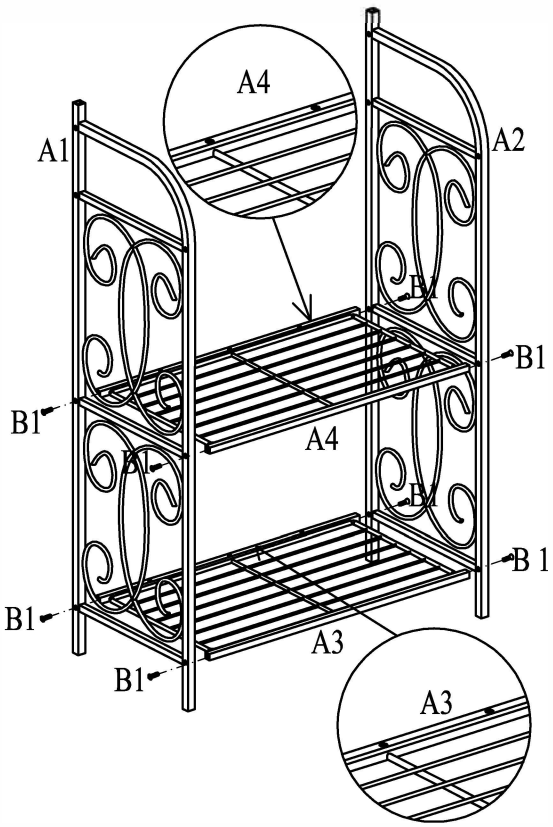

Attach Side Frames A1&A2 to Racks A3&A4 using Bolts B1.
Please do not tighten Bolts B1 until step 5.

STEP 2

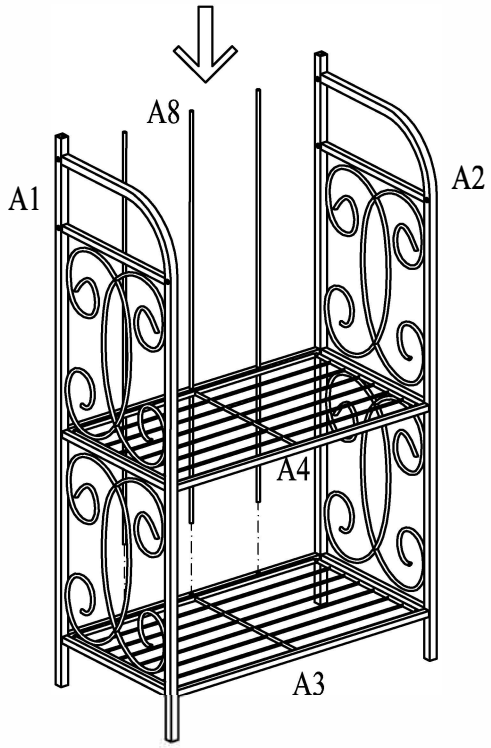

Insert Back Support Bars A8 into the holes on the back of Bottom Rack A3 and Middle Rack A4 as shown above.

STEP 3

B1 4pcs

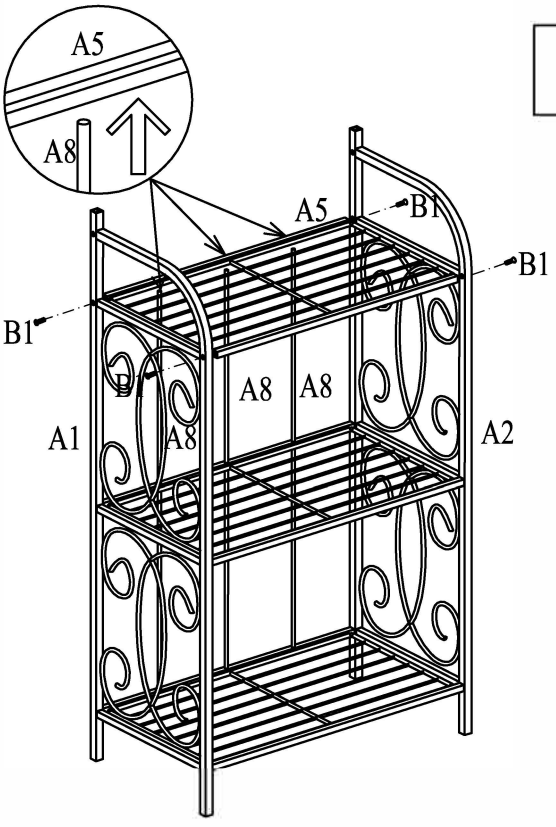

Insert Back Support Bars A8 into the holes on Top Rack A5.Then assemble Top Rack A5 to Side Frames A1&A2 using Bolts B1.

Please do not tighten Bolts B1 until step 5.

STEP 4

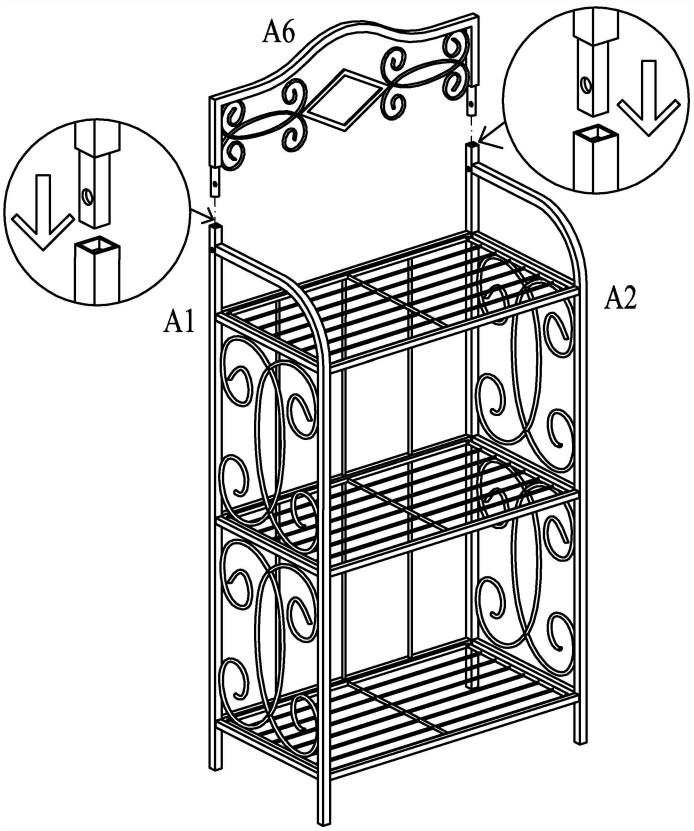

Insert Back Frame A6 into Side Frames A1&A2 as shown above.

STEP 5

B1		2pcs

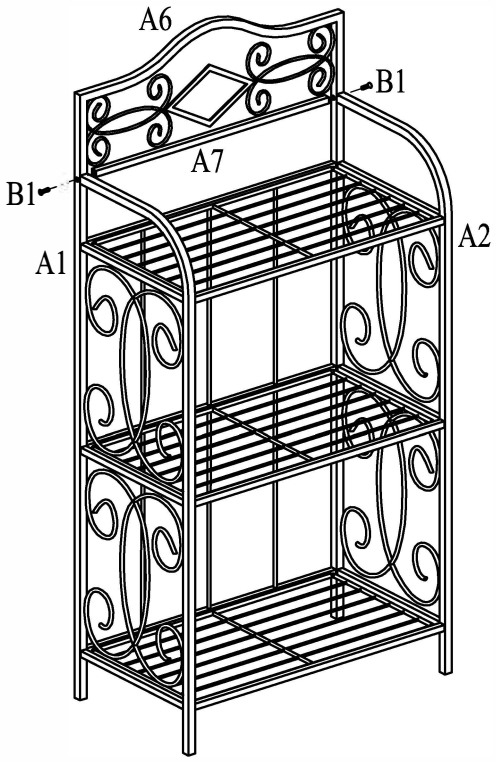

Attach the Connecting Bar A7 to Side Frames A1&A2 and Back Frame A6 using Bolts B1. Please tighten all bolts at this point.