ASSEMBLY INSTRUCTION
MODEL: WOODEN BED (KING)

Caution : You must read this before you proceed

- Not for commercial use. For residential use only.
- Do not clean furniture with harsh cleansers or polish.
- Do not place furniture under direct sunlight.
- Do not place furniture outside . For indoor use only.

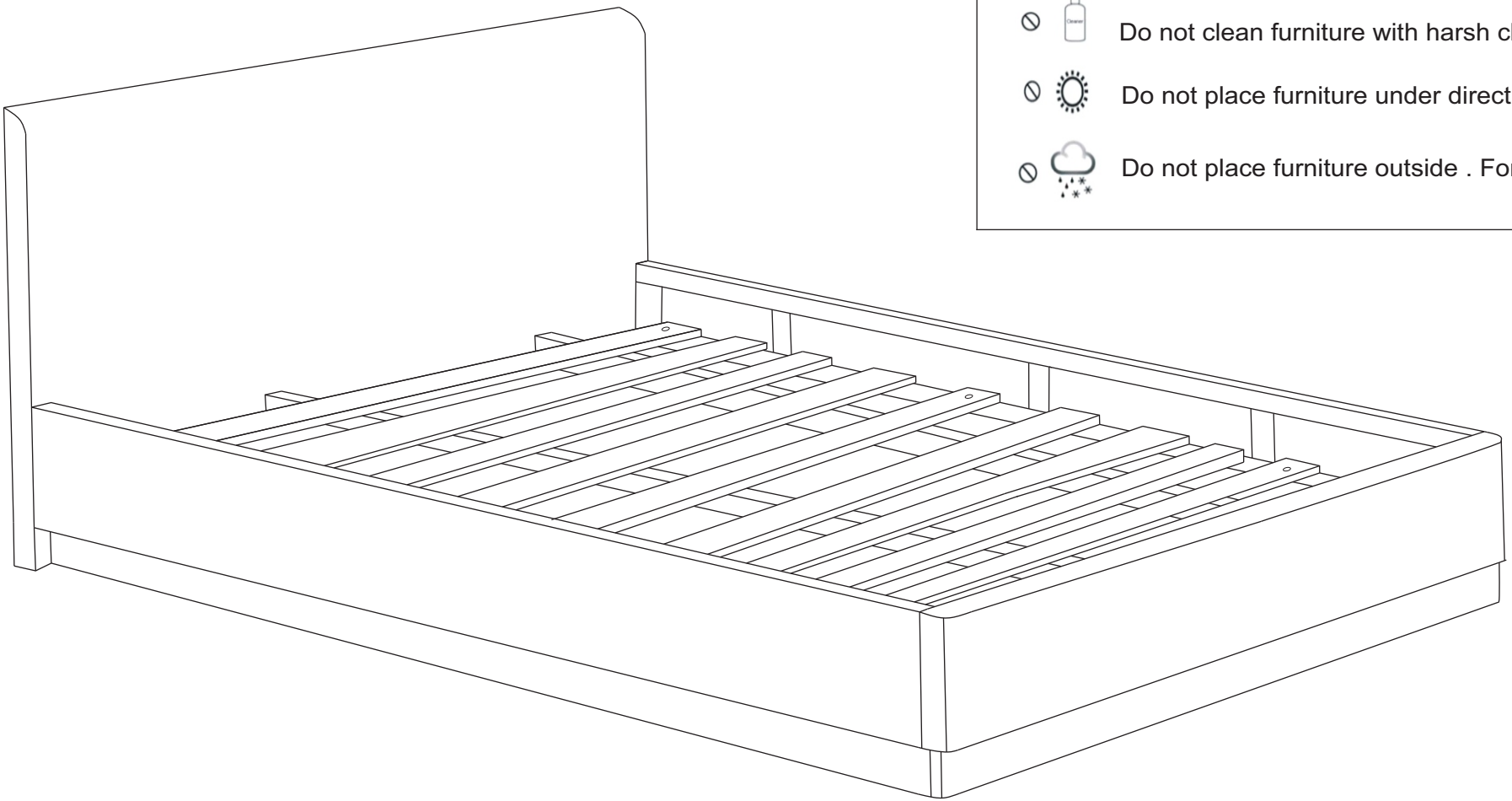

LABEL			
LABEL	PICTURE	DESCRIPTION	QTY
A	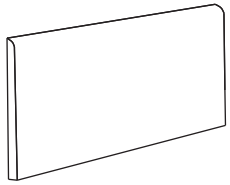	Headboard Panel	1
B	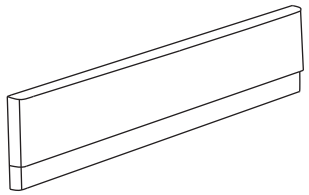	Footboard Panel	1
C	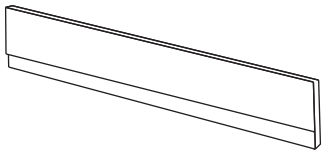	Left Side Rail Panel	1
D	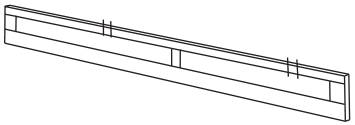	Right Side Rail Panel	1
E	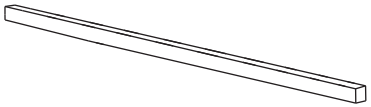	Middle Rail Support	2
F	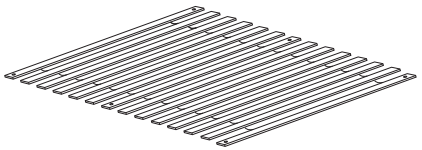	Wood Slats (14 pcs)	1

HARDWARE			
LABEL	PICTURE	DESCRIPTION	QTY
①		JCBC Screw M6 x 80mm	8
②		C/B Screw M4 x 25mm	6
③		R/Wood Dowel M8 x 40mm	8
④		Allen Key M4	1
⑤	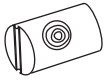	Barrel Nut M6	4
⑥		Washer	8

Before Beginning Assembly:

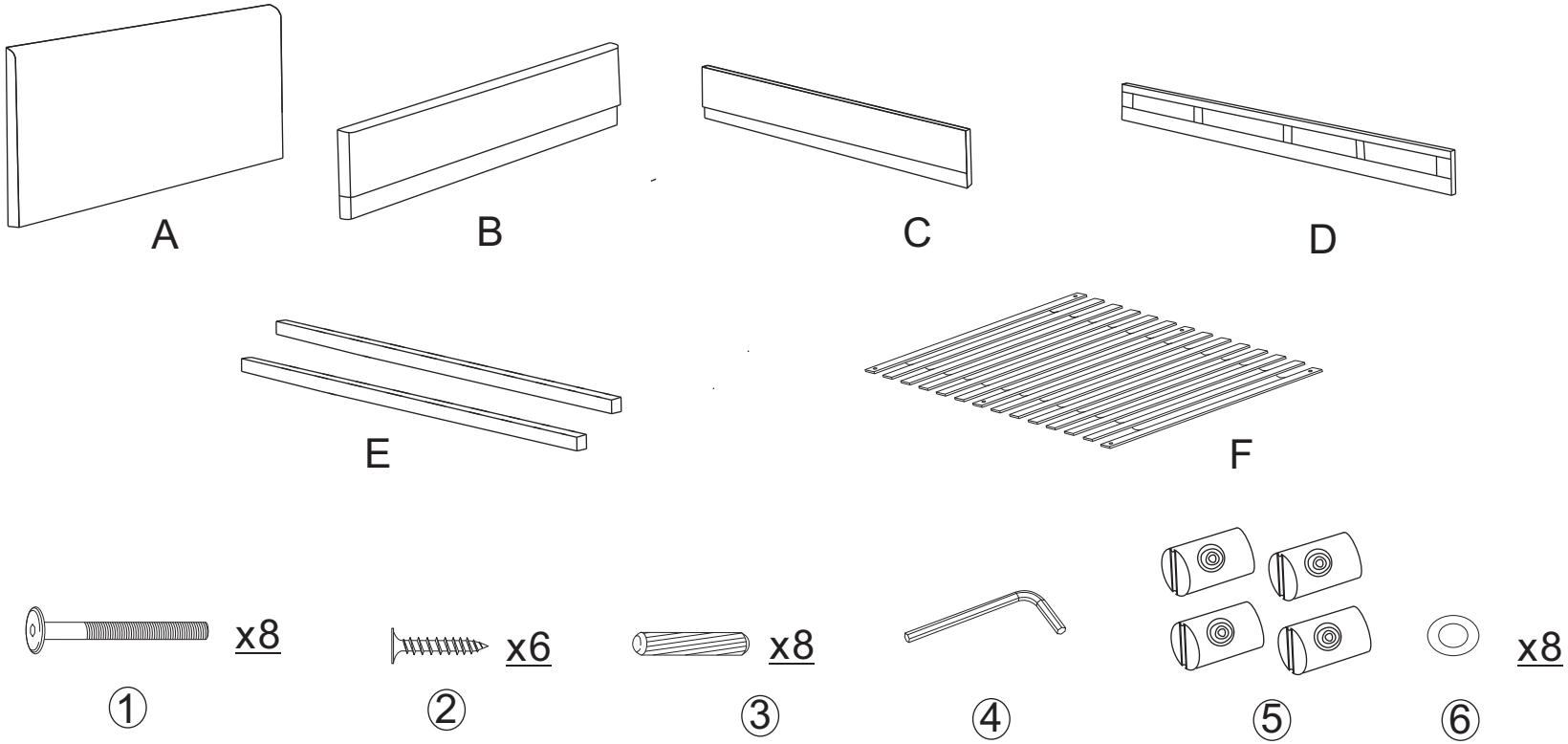

- Read instructions, cover to cover-
- Have 2 adults on hand for assembly-
- Do not assemble on flooring or carpet-
- Assemble on a clean non-marring surface (packing foam)-
- Save all packaging until finished-

OVERVIEW

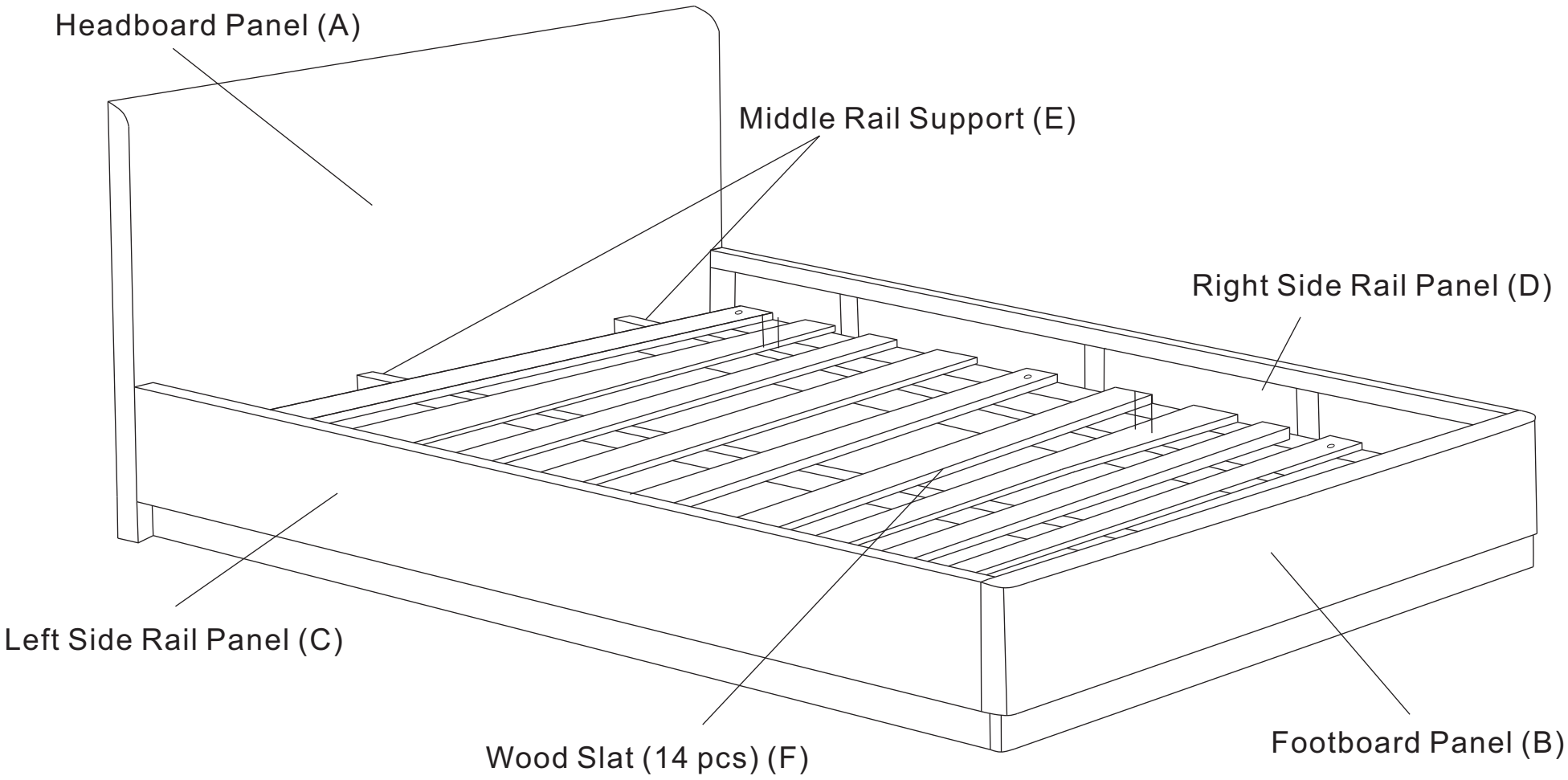

This wooden bed has multiple parts and may require up to 60 minutes to assemble. To give you an overview of the wooden bed parts, the above picture is to help you put the various parts into perspective. Please read through the instructions herebelow to familiarise the parts and steps before assembly.

Step 1

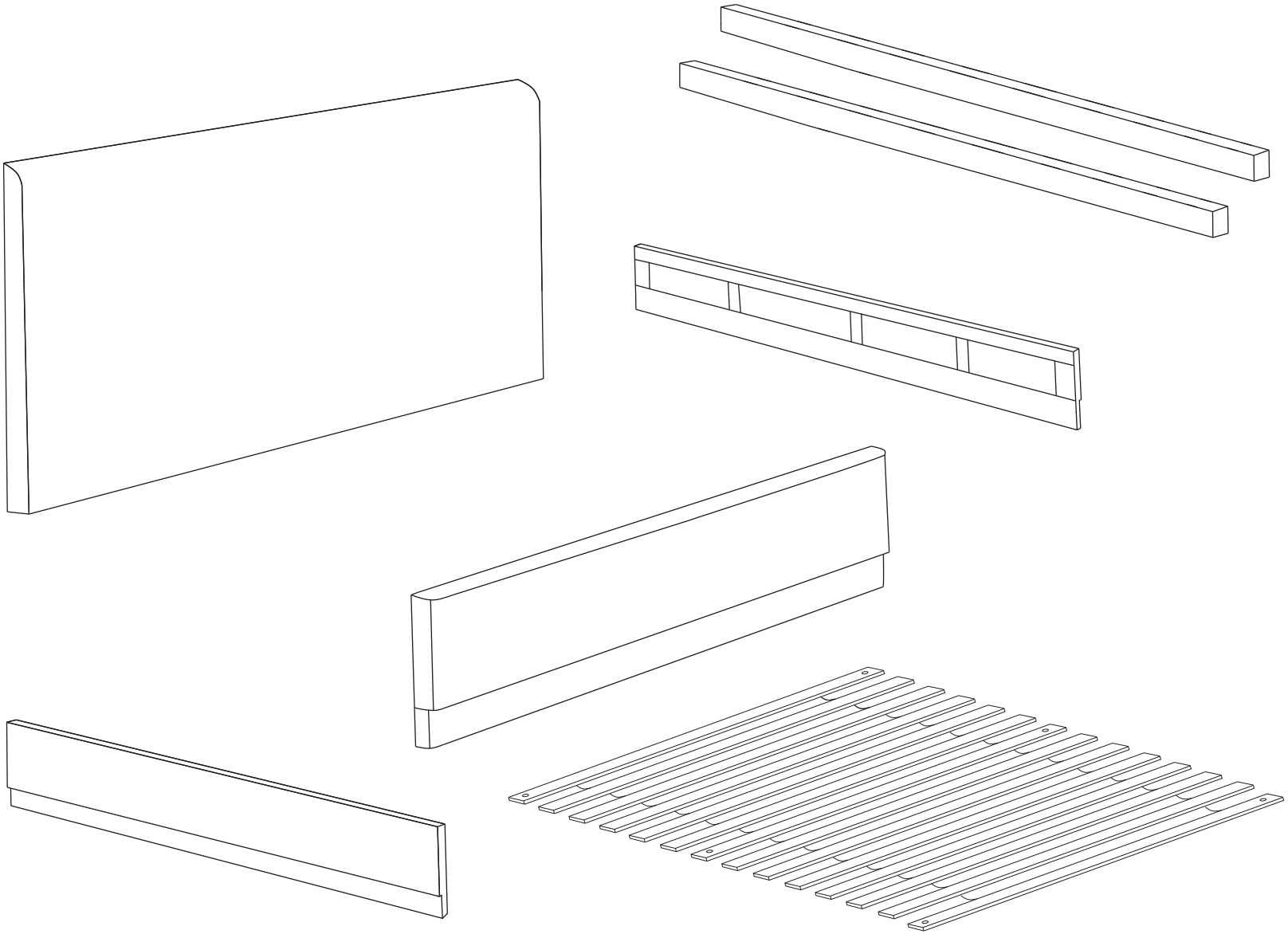

Unpack and place all parts on a clean, non-marring surface.

Step 2(a)

①		4
③		8
⑥		4

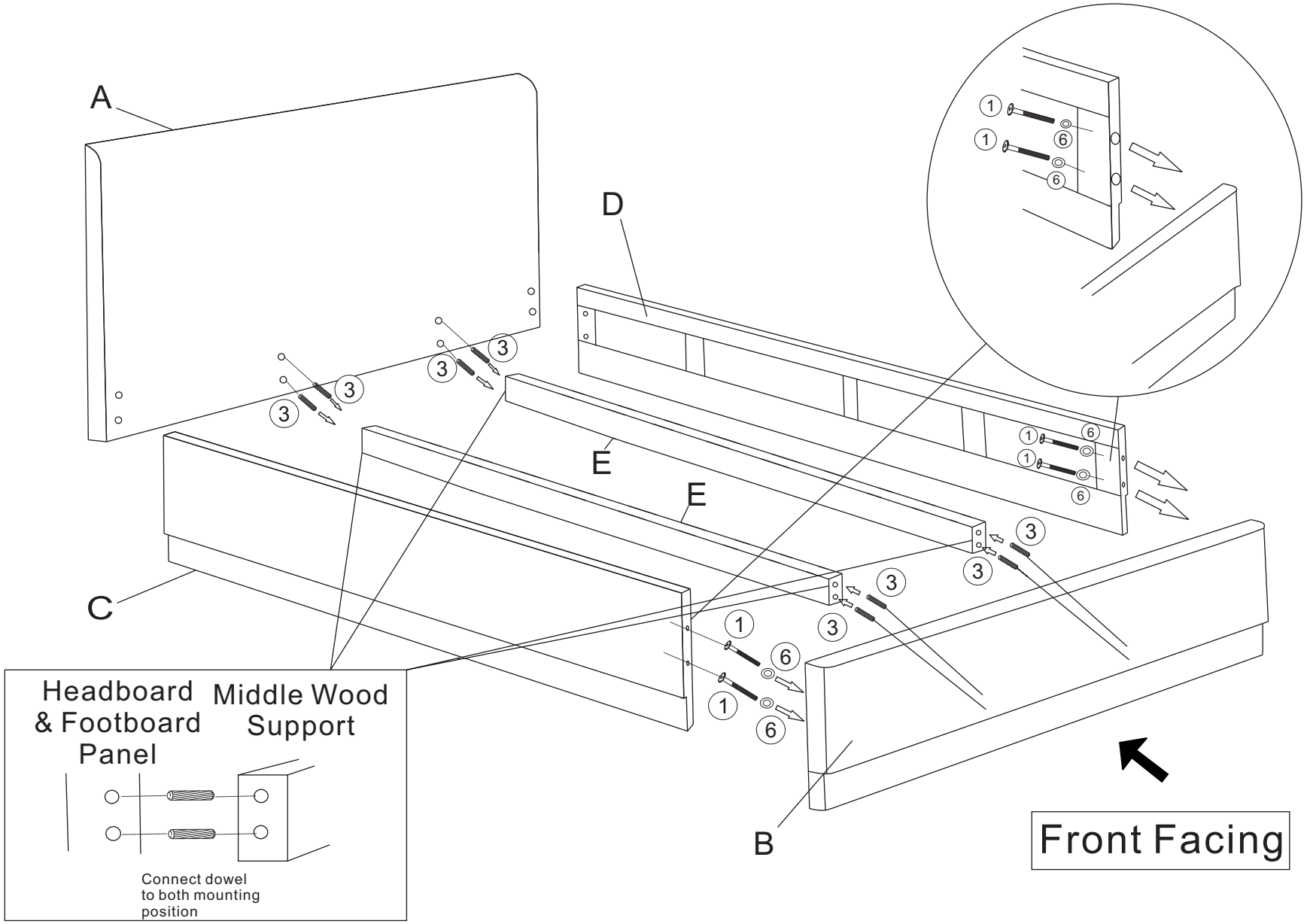

Note: Step 2(a) and 2(b) can refer together for installation.

Insert the Wood Dowels (3) into the pre-drilled holes on both ends of the Middle Rail Supports (E). Connect the Middle Rail Support (E) to the Headboard (A) and Footboard (B).Secure the Side Rails to the Footboard using JCBC Screws (1) by following the detail diagram.

CAUTION 1: Tighten the screws sequentially. DO NOT fully tighten any single screw before others.

Step 2(b)

①		4
④		1
⑤		4
⑥		4

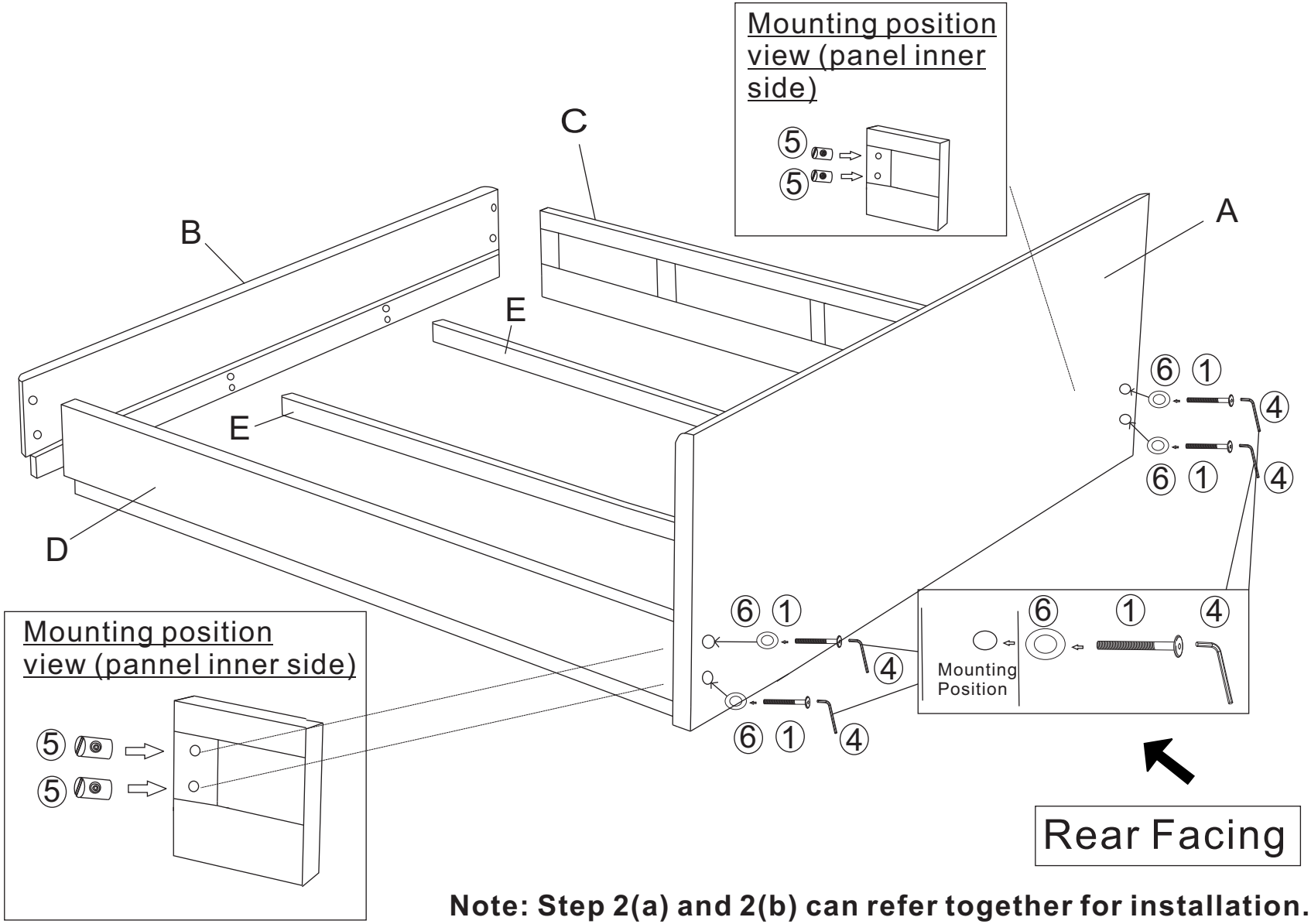

Note: Step 2(a) and 2(b) can refer together for installation.

Insert the Barrel Nuts (5) into the inner side openings of the Headboard (A). Ensure the nut hole is aligned with the side bolt path. Insert the JCBC Screws (1) through the Washers (6) and into the pre-drilled holes on the Side Rails (C & D). Tighten the screws into the Barrel Nuts using the Allen Key (4). Repeat this process for all four sides until the headboard frame is secure.

CAUTION 1: Tighten the screws sequentially. DO NOT fully tighten any single screw before others.

Step 3

②	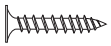	6

IMPORTANT
Install the slats starting from the headboard side toward the footboard side.

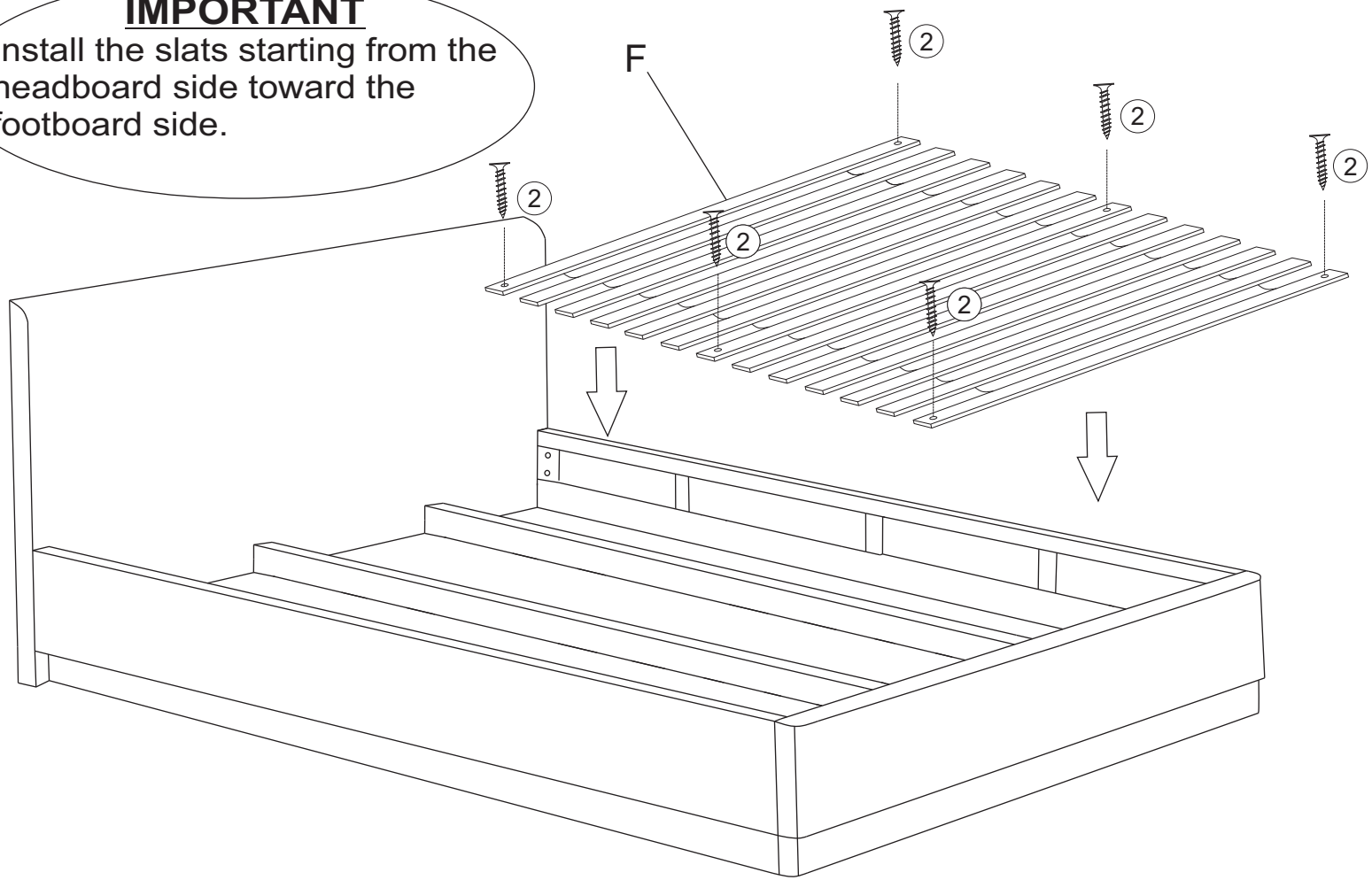

Unroll the Wood Slats (F) starting from the headboard side toward the footboard side, ensuring they are placed evenly across the inner ledges of the bed frame. Make sure the slats are aligned with the mounting points on the side rails. Secure the slats in place by driving the C/B Screws (2) through the pre-drilled holes using a screwdriver.

CAUTION 2: This Wooden Bed can only be used on a flat, level surface.