ASSEMBLY INSTRUCTION



Note:

-Due to the large size and weight of solid wood furniture, damage may occur in transit. Should you notice any issues upon receipt, please contact us via "Contact Seller" feature. We will resolve the matter per policies.

-This assembly manual is applicable to products of different sizes and colors.



ASSEMBLY STEPS

Please install it on a soft blanket to prevent scratching the surface.

01 Connecting Parts E H I and install the adjustable feet.

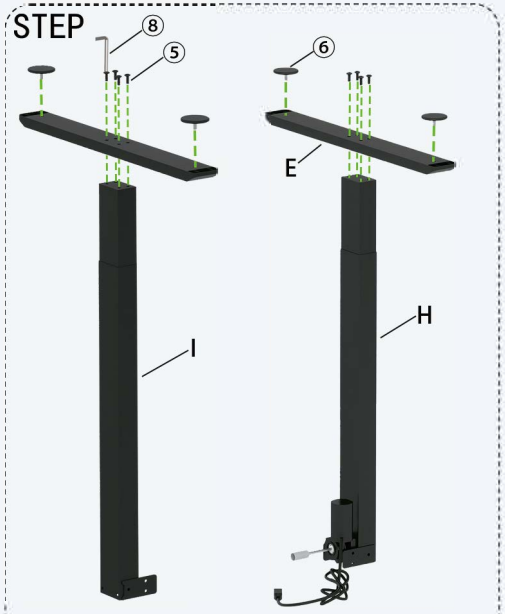

02 Connecting Parts G H I .

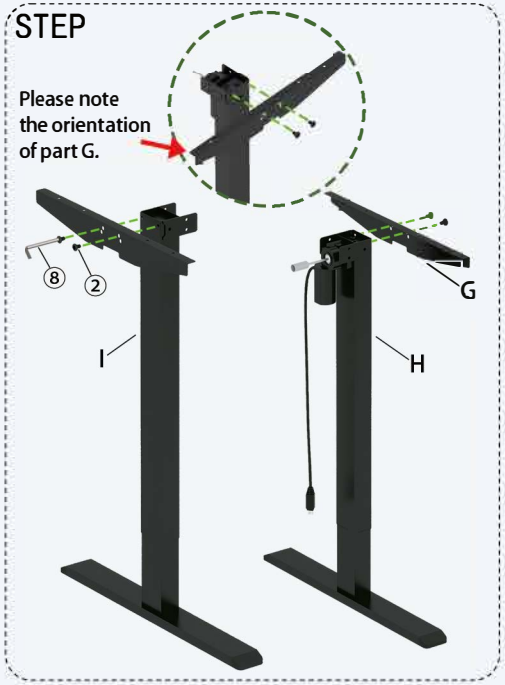

03 Connecting Parts A G and insert part F into part I.

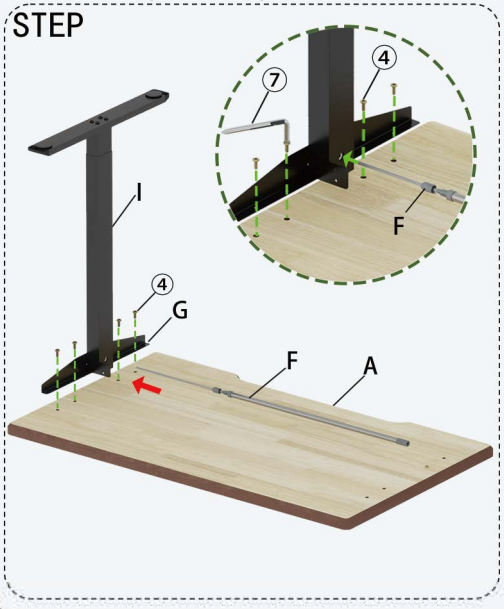

04 Insert part F into part H.

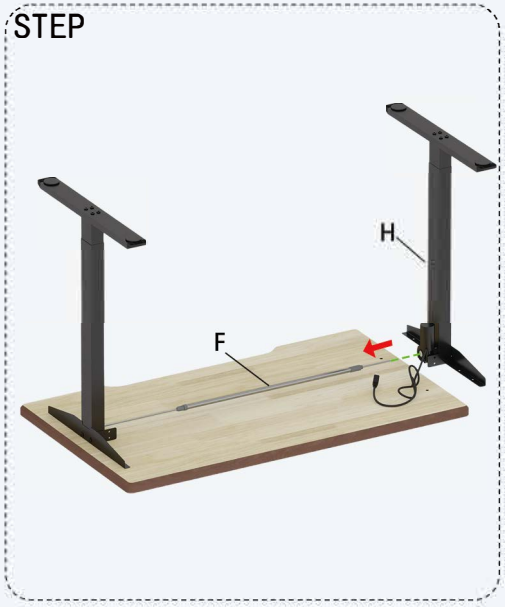

ASSEMBLY STEPS

05 Connecting Parts A G.

STEP

After extending it to the desired length, tighten it at the position indicated by the arrow.

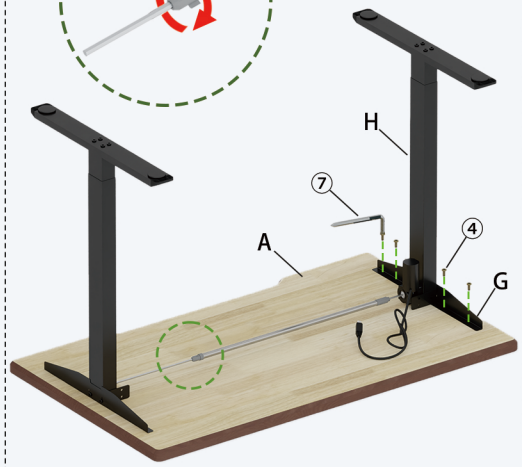

06 Insert part B into parts C and D.

STEP

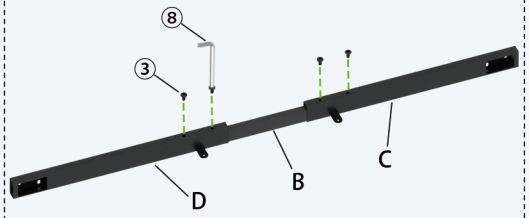

×2

Extend it to the proper length, but do not tighten the screws yet to ensure that the connected parts can slide.

07

STEP

STEP3:
Connecting Part A C D.

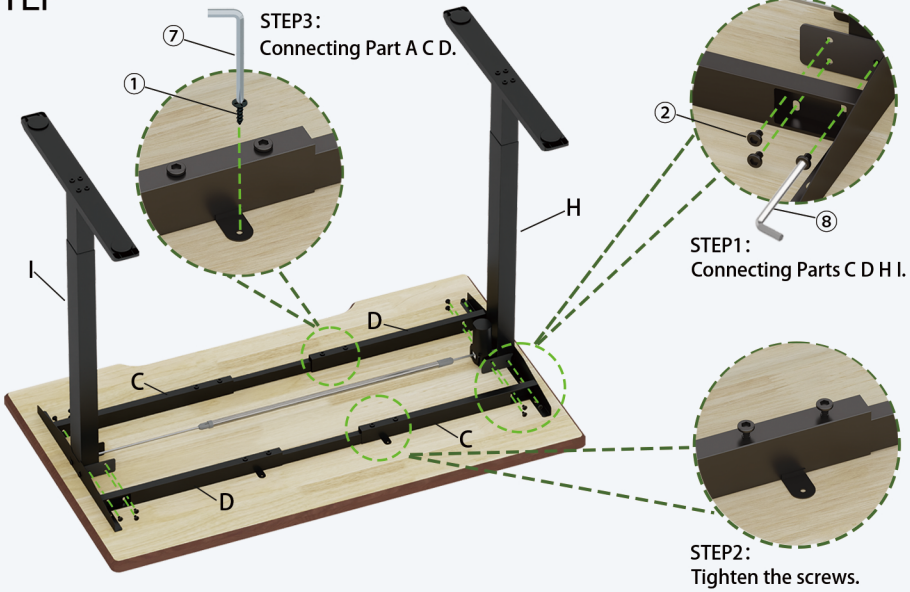

STEP1:
Connecting Parts C D H I.

STEP2:
Tighten the screws.

08 Install Part J.

STEP

(No pre-drilled holes.Connect plug first, mark position, then drill pilot holes.)

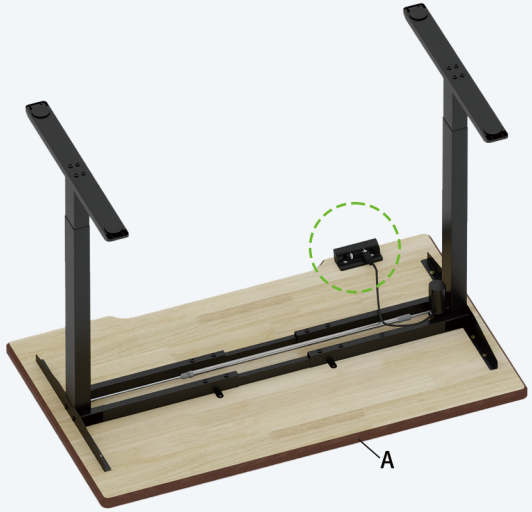

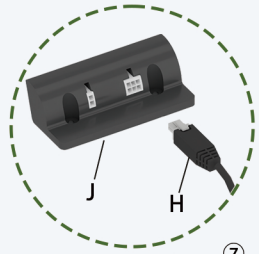

Connect the Plug.

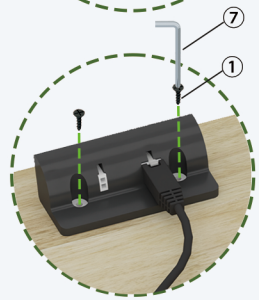

Connecting Part A J.

09

STEP

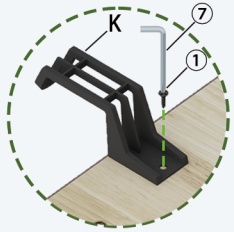

Install Part K.

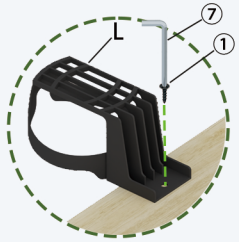

Install Part L.



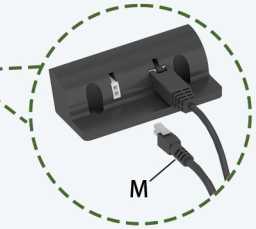

Connect the Plug .

Note: Pre-drilled mounting holes are NOT included for the K-Headphone hook & L-Basket. Installation is optional.