ASSEMBLY INSTRUCTION

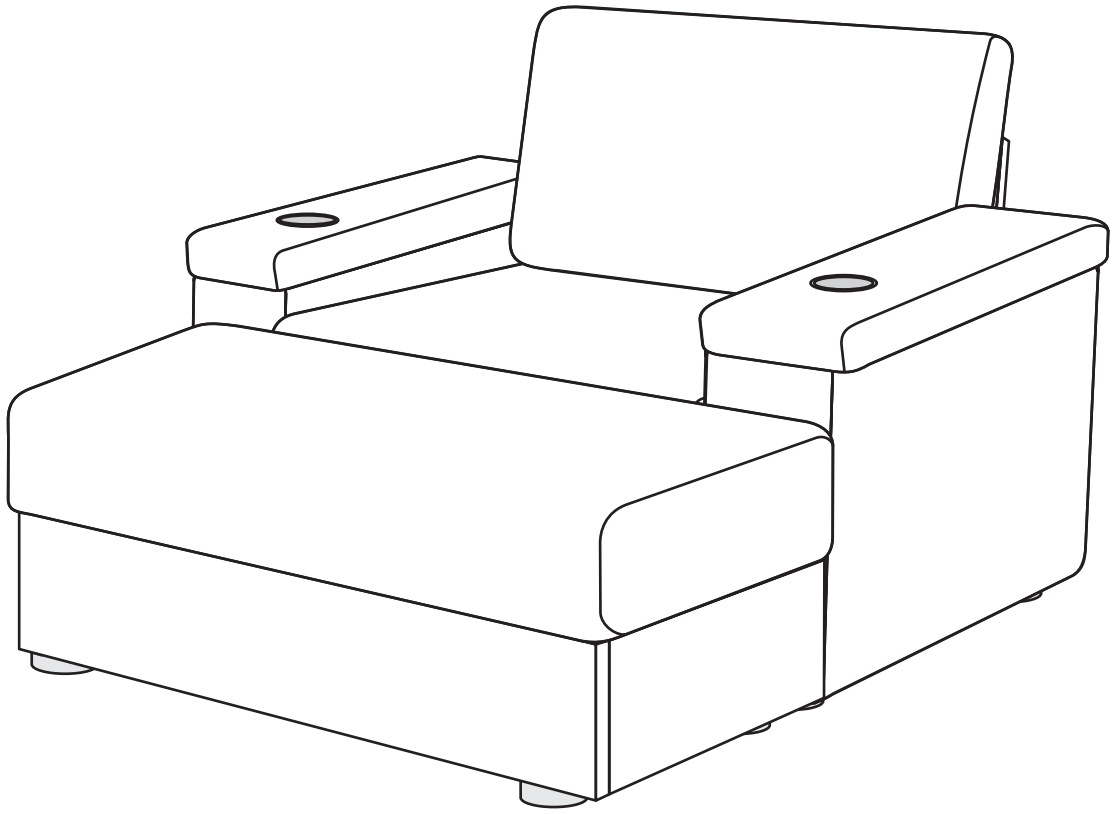

Sets often ship in multiple boxes and delivery date may vary.

CUSTOMER SERVICE

Questions,Missing parts,Assembly help?
No need to return the product, we will gladly help and shipyour replacement parts free of charge.

PRE-ASSEMBLYINFORMATION

Please read this manual carefully before beginning assembly of thisproduct. Keep this manual for future reference.

NOTICE

1.Please assemble it AFTER all boxes are received.

2.Please do not throw away any of the packages or the instruction until the sofa is fully assembled.

3.Please keep children away from the plastic bags or any small pieces of stuff.

4.Some key parts of our product may be stored and hidden inside of other parts.
Please open any zippered or hook & loop storage compartments to take out all parts.

5.Please do not open the compressed packages until your sofa frame is completely assembled.

6.As the cushions are all vacuum compressed,there will be some wrinkles. Please give them up to 72 hours to reach its original size and the wrinkles will basically disappear.

7.DO NOT INSTALL THE SCREWS ALL THE WAY IN THE BEGINNING.
Place each screw into their proper hole and use your hand to twist the screw halfway. Twist all the screws in halfway to ensure the holes will match up properly and the product is level on the ground. When everything seems fitted, then tighten the screws.

8.Do not over tighten screws and bolts to avoid stripping.



2 adults recommended



Takes about 1.5 Hours to assemble



Weight capacity of each

COMPONENTS

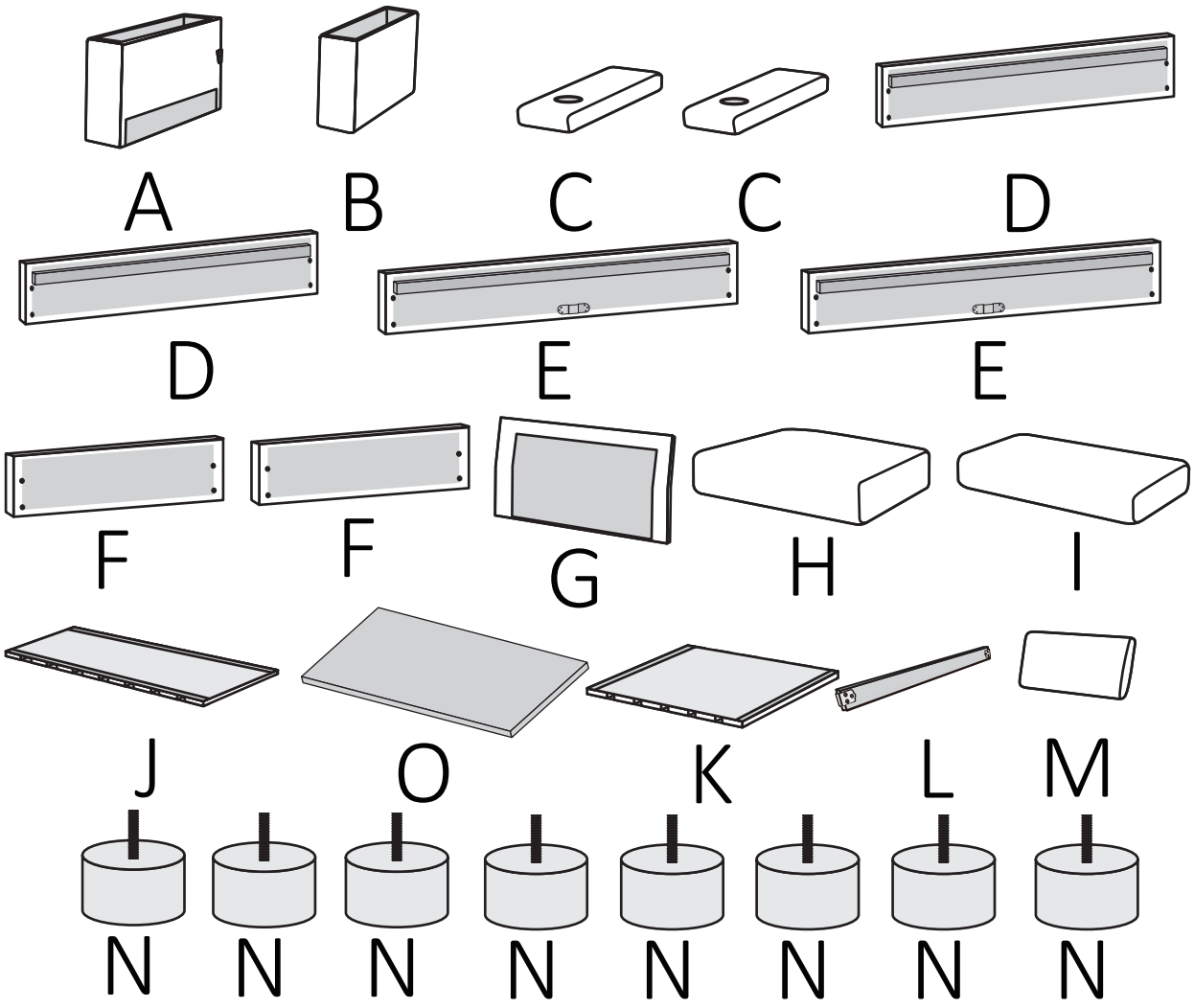

HARDWARE			
NO	DESCRIPTION	SKETCH	QTY
1	Screws 6*20	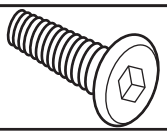	36
2	Washer 6*18	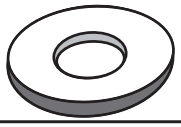	32
3	Wrench 4mm		1
4	Single seat Connector	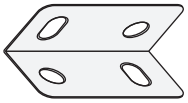	4
5	ottoman Connector	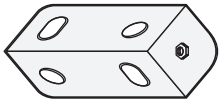	4
6	backrest connector	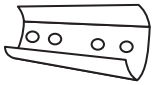	2

COMPONENTS

A Left armrest

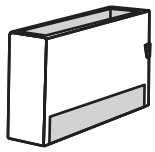

1PC

B Right armrest

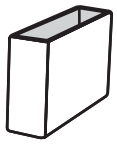

1PC

C Armrest cover



2PCS

D Single seat F&B panels



wood square positioned a bit up!

2PCS

E Ottoman F&B panels



wood square positioned a bit up!

2PCS

F ottoman side panels



2PCS

G Backrest

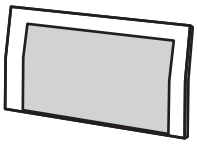

1PC

H Single seat cushion

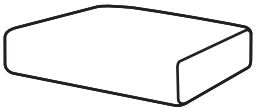

1PC

I Ottoman cushion



1PC

J Ottoman rib slat

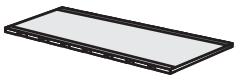

1PC

K Single seat rib slat

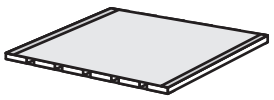

1PC

L Crossbars

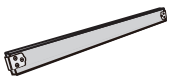

1PC

M back cushion



1PC

N Sofa legs

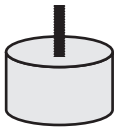

8PCS

O storage bottom panel

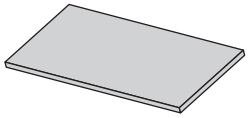

1PC

Hardware
+
Manual

ASSEMBLY STEPS

STEP 1

Fix the connectors(④/⑤) to the Single seat F&B panels(D) and ottoman side panels (F)using screws(①) and washers(②).

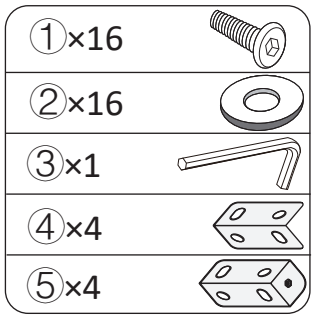

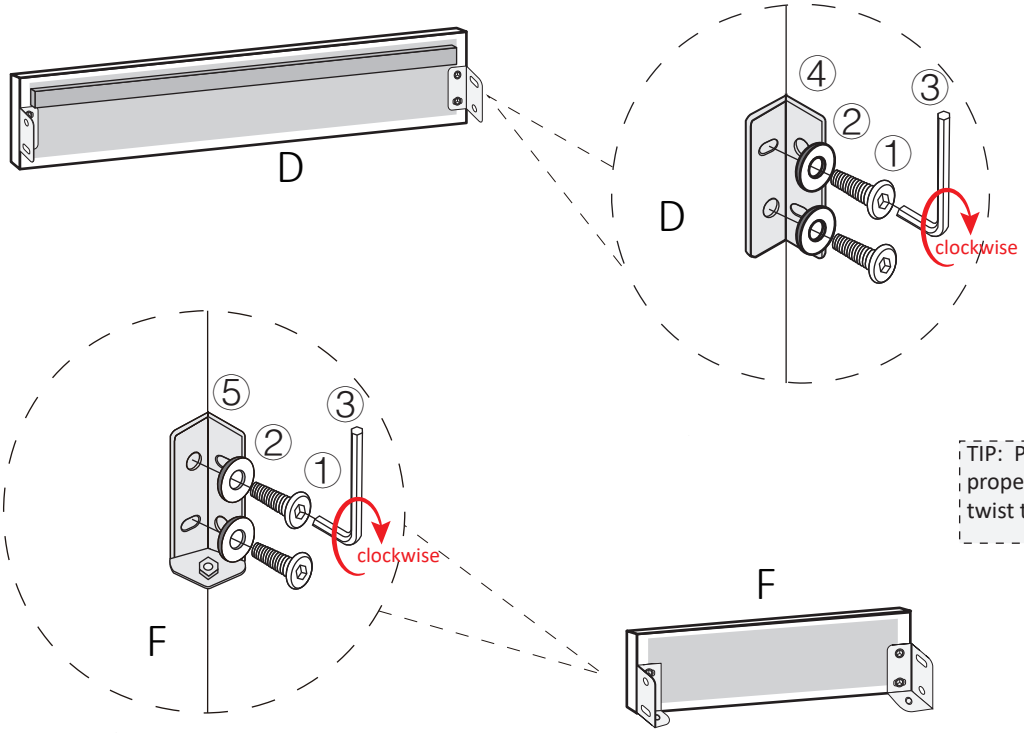

TIP: Place each screw into their proper hole and use your hand twist the strew halfway.

STEP 2

Use connectors(④) , screws(①), and washers(②) to connect and secure the front and back panels(D) and armrests(A/B).

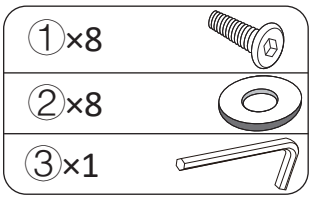

Twist all the screws in halfway to ensure the holes will match up properly, then tighten the screws.

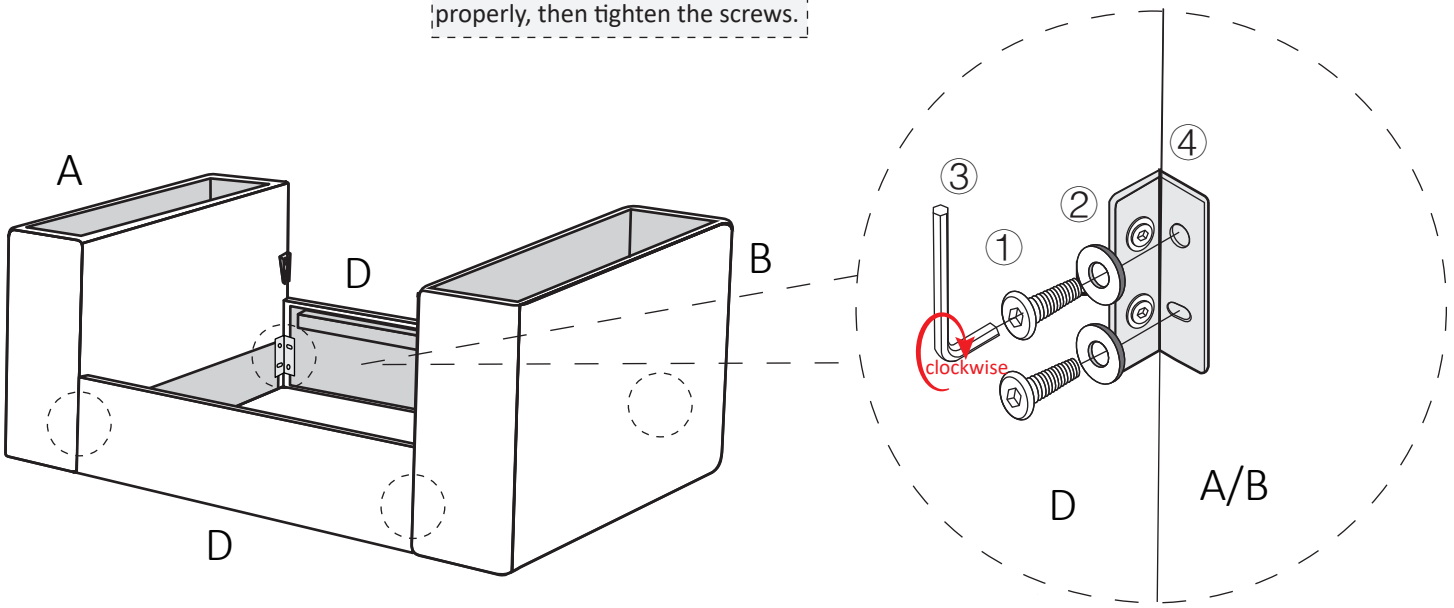

STEP 3

Use connectors(⑤) , screws(①), and washers(②) to connect and secure the front and back panels(E) and Ottoman side panels(F).

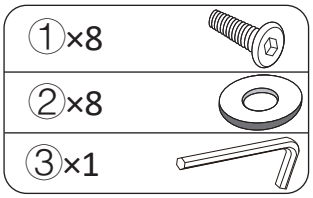

Twist all the screws in halfway to ensure the holes will match up properly, then tighten the screws.

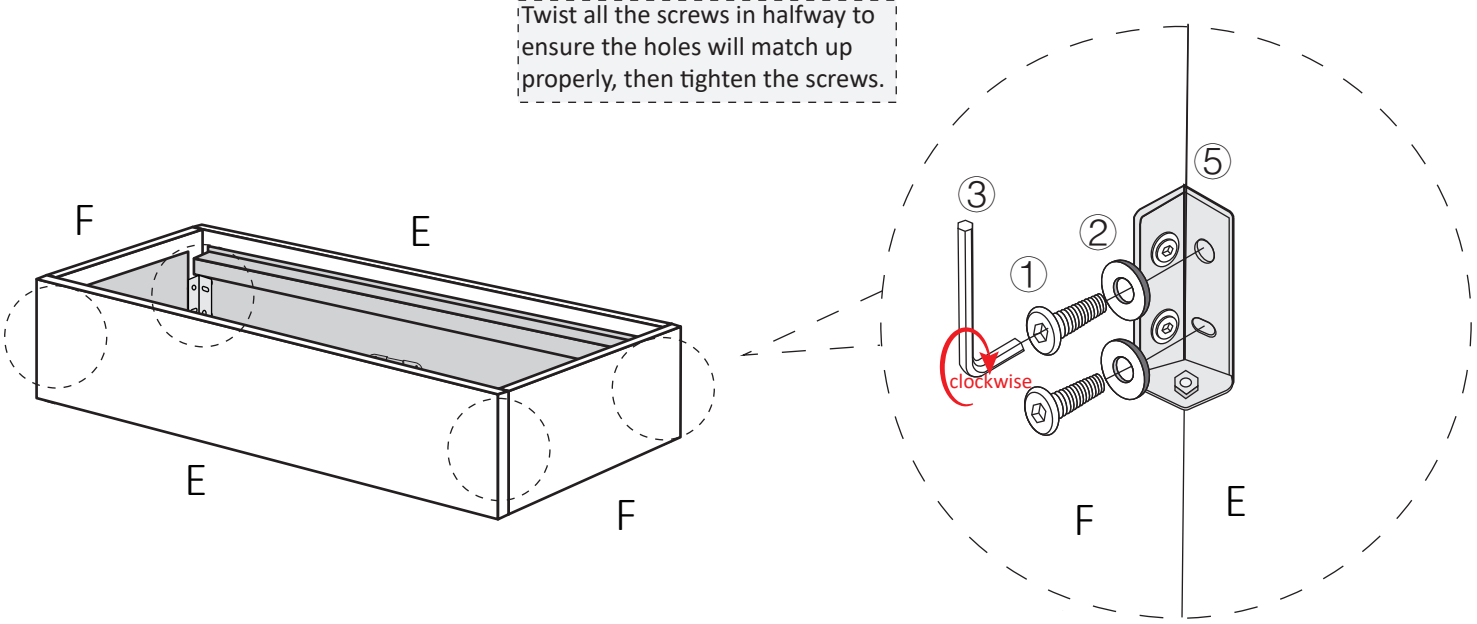

STEP 4

Install sofa legs(N) for the assembled single seat frame and ottoman frame.



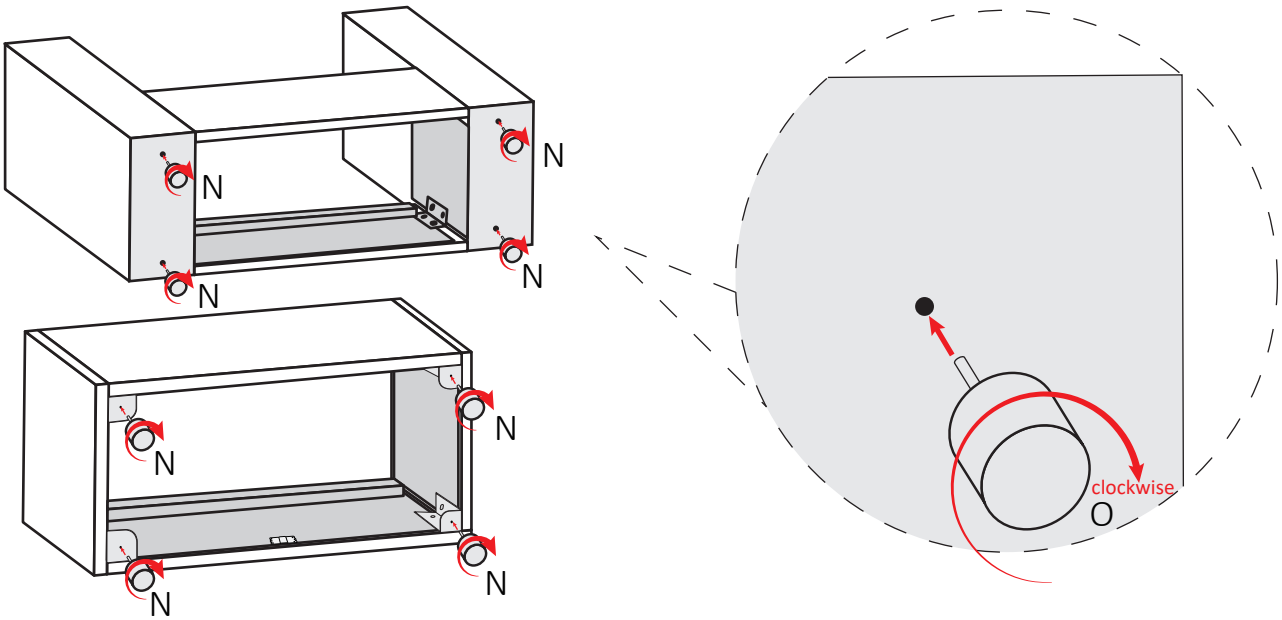

STEP 5

Secure the ottoman frame with crossbars(L).

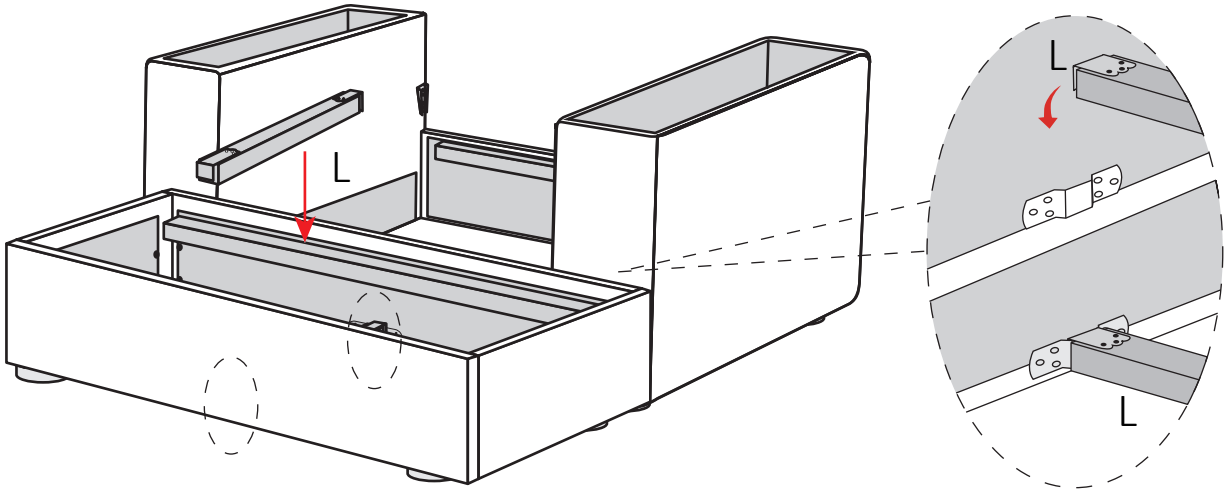

STEP 6

Place the storage bottom panel(O), and press firmly with both hands to ensure it is securely in position.

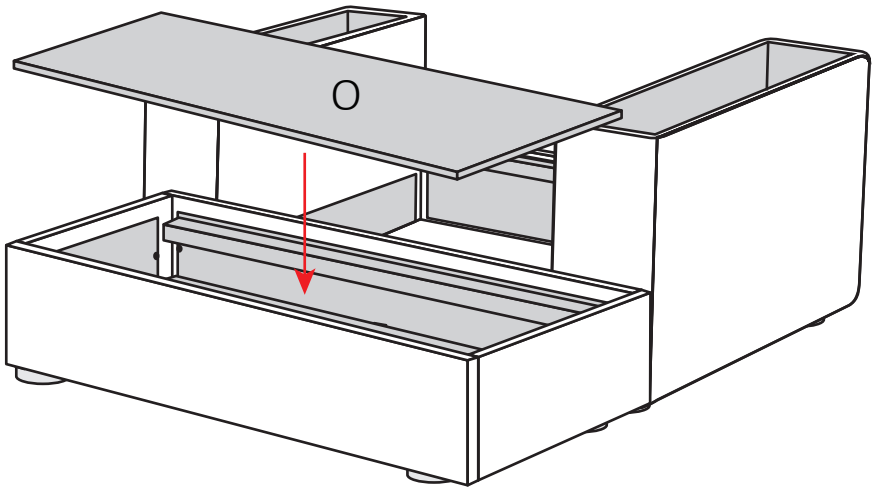

STEP 7

Attach the hook-and-loop fastener under the rib slats(J/K) to the horizontal bars above the front and back panels.

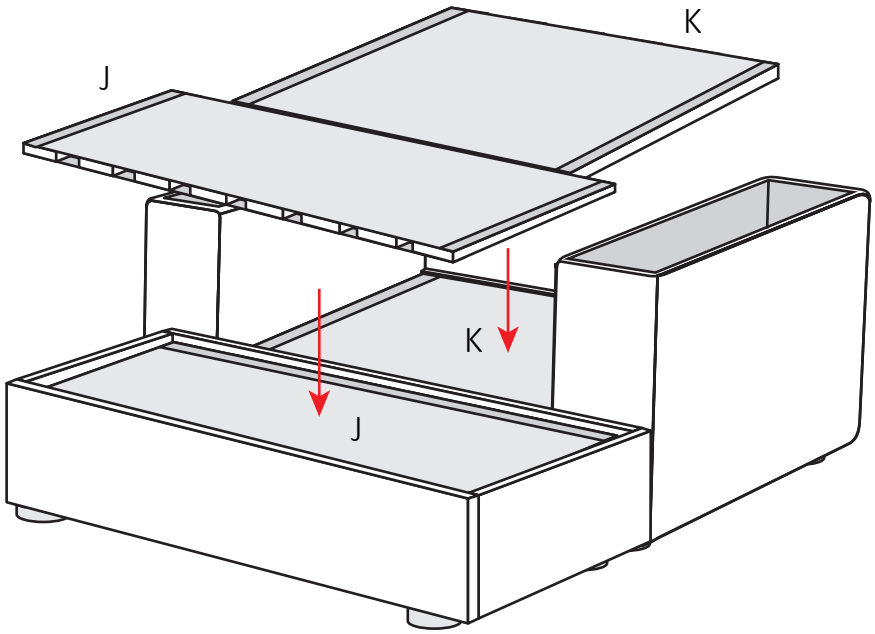

STEP 8

Install the backrest connectors(⑥) to the left and right sides of the backrests(G) with screws(①) by wrench.

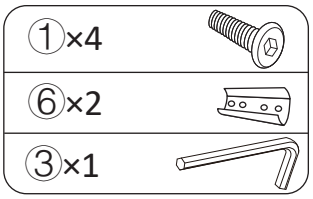

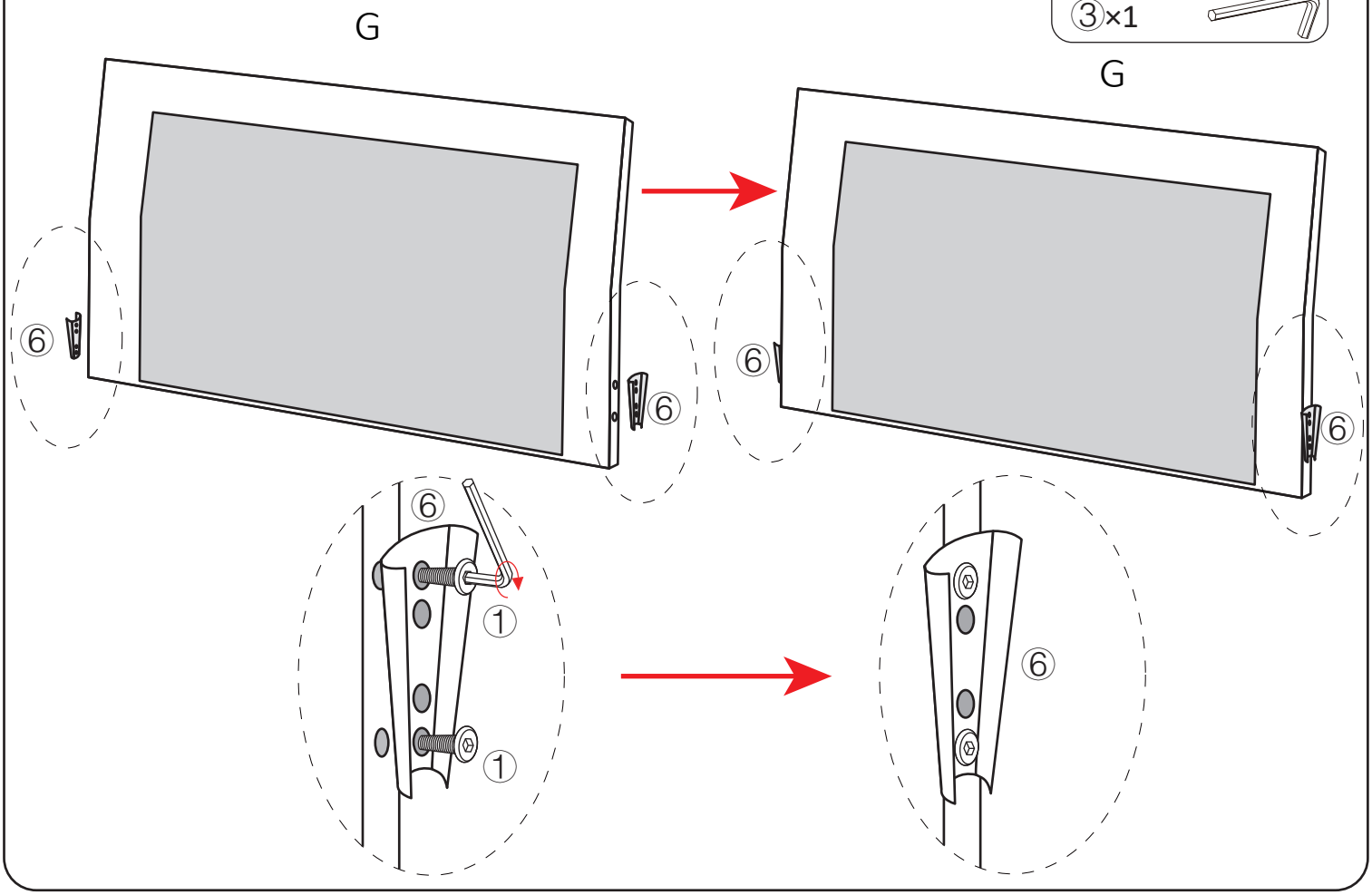

STEP 9

Use both hands to insert the backrest(G) between the armrests(A/B), securing it in place by utilizing the hardware fittings on both components.

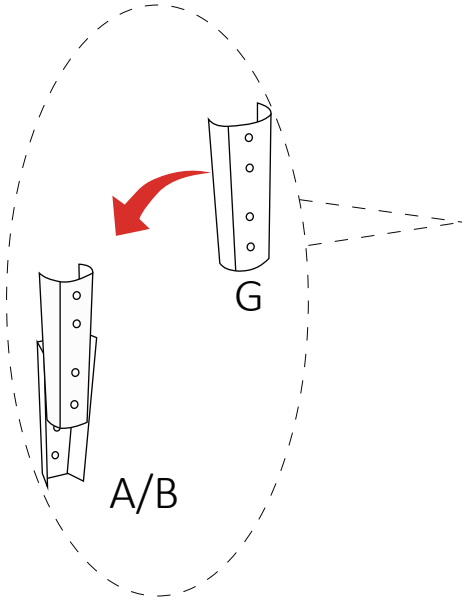

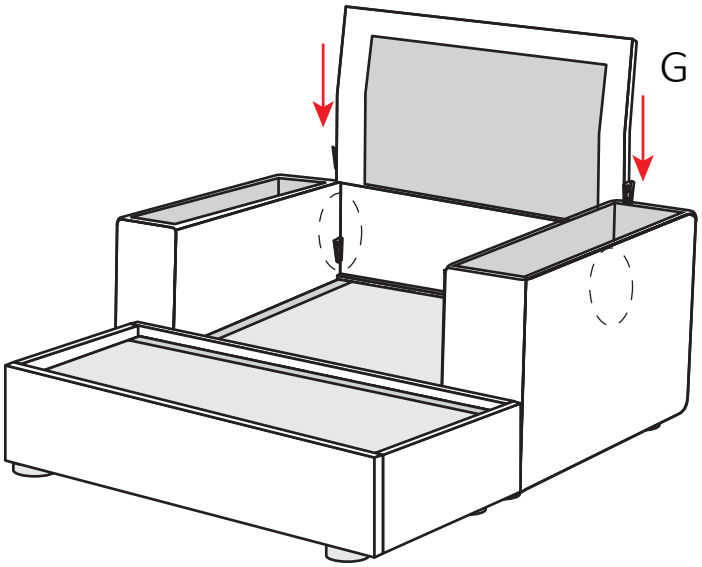

STEP 10

Open the vacuum bag and take the cushions(H/I/M)out. To restore the original shape,follow the steps bellow.



Open the vacuum bag carefully.



Press and tap with both handsfrom the side to fully inhale air.

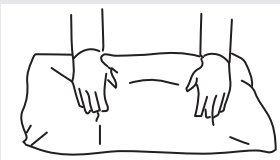

Press and tap with both handsfrom the front to fully inflate.

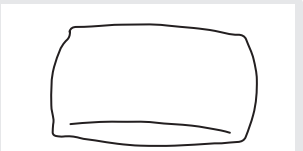

Carefully smooth out eachsection until the surface is even.

After packing up, place them in somewhere dry and venslated. After about 72-96 hours. It can be restored to the best use condition.

STEP 11

Place the seat cushions(H/I) on the sofa frame; it should have been left to restore its elasticity for over 72 hours after removal.

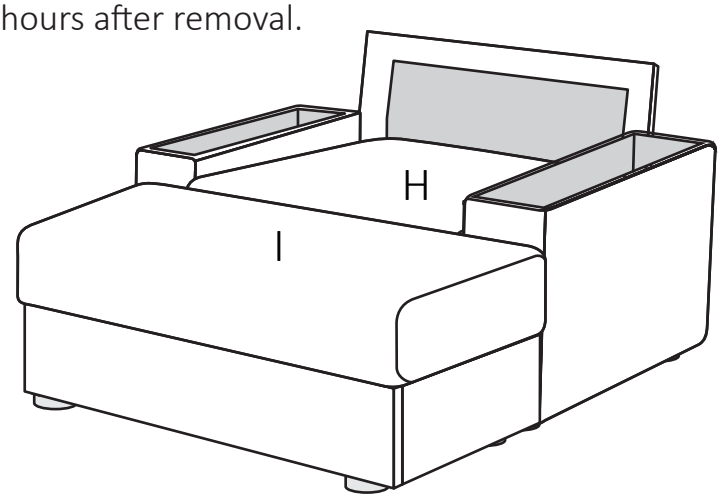

STEP 12 Place the back cushion(M) in front of the backrest; it should have been left to restore its elasticity for over 72 hours after removal.

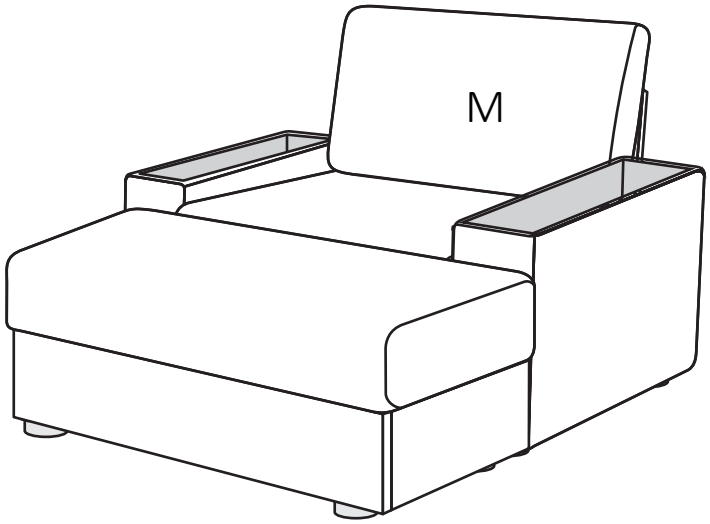

STEP 13 Place the armrest covers(C) on top of the armrests(A/B).

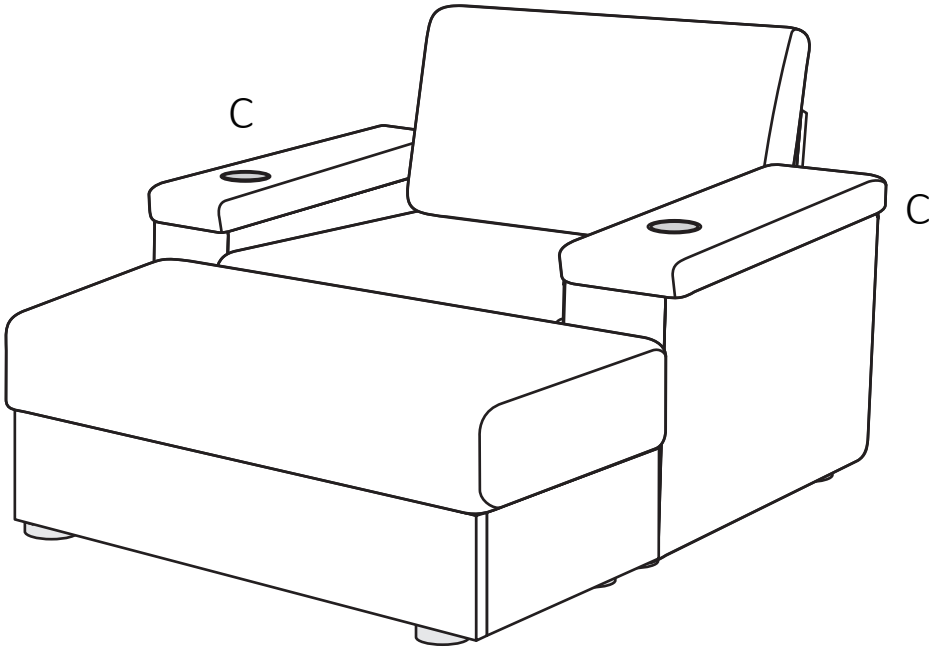

STEP 14 Complete

