After opening the packaging, please classify the accessories according to the accessory list before starting installation.

Accessory List

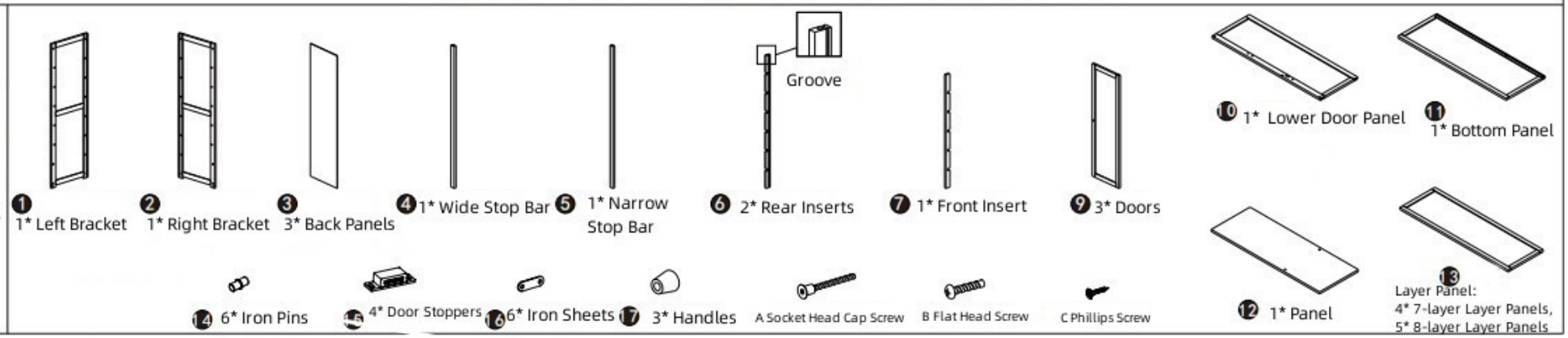

Installation Diagram

1

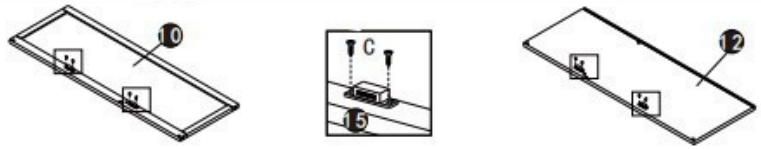

Fix the door stopper 15 on layer panel 10 and panel 12 with screw C.

2

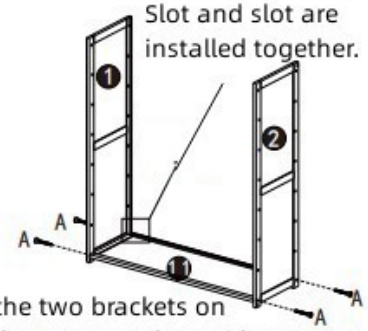

Slot and slot are installed together.

Fix the two brackets on the bottom panel 11 with screws A.

3

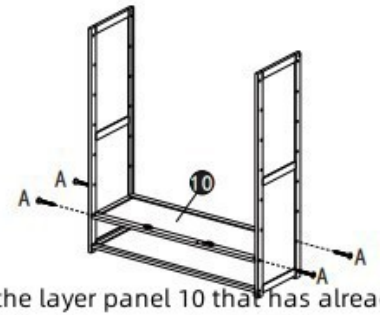

Fix the layer panel 10 that has already installed the door stopper with screw A.

4

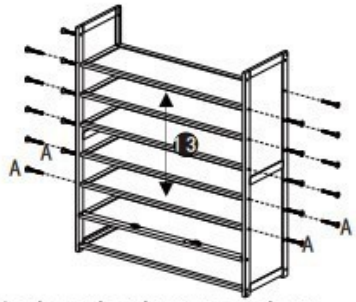

Fix the other layer panels 13 with screws A.

5

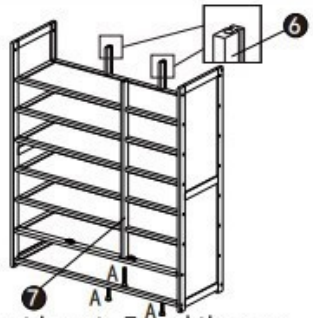

Fix the front inserts 7 and the rear inserts 6 with screws A.

6

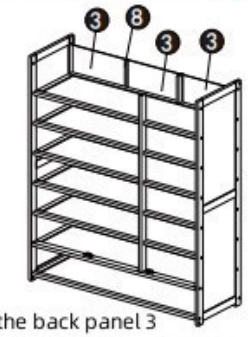

Insert the back panel 3 and small inserts 8.

7

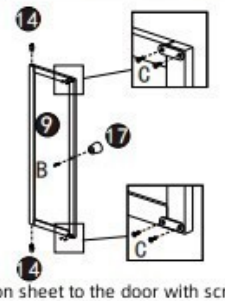

Fix the iron sheet to the door with screw C, fix the handle 17 to the door with screw B, and then insert the iron pin 14 at both ends of the door.

8



Fix panel 12 with screws A. Only tighten the two screws A at the back.

9

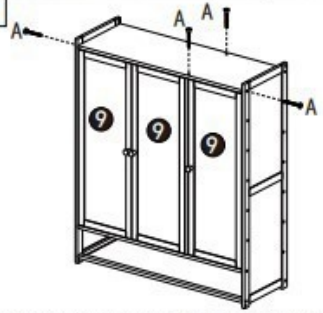

Insert the iron pin of the door into the hole of the layer panels, and then screw in the other screws on the panel after all the doors are inserted.

10

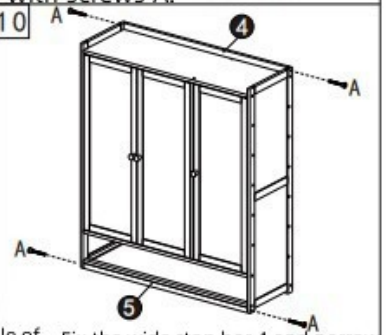

Fix the wide stop bar 4 and narrow stop bar 5 with screws A.

Installation Notice

1. Before installation, please check the accessories according to the instruction. If there are any missing or damaged parts, please take photos and contact customer service.

2. The correct use of a small Allen key:

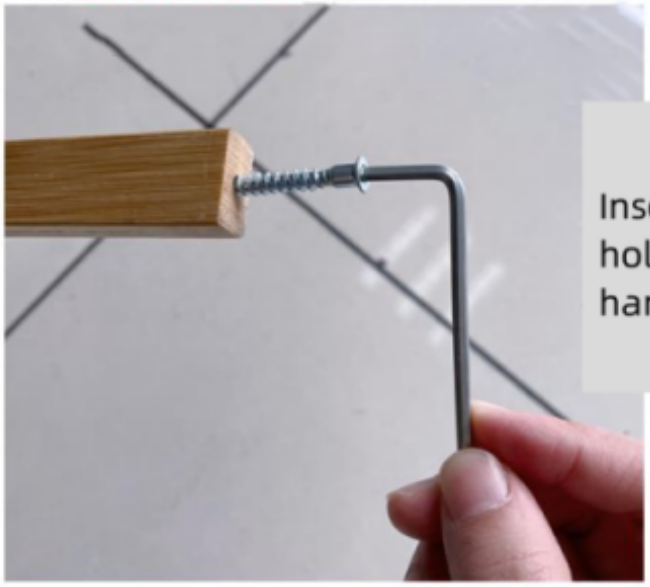

Insert the screw with the short end and hold the long end to twist with your hand, which saves time and effort.

3. Correct steps for tightening screws:



Inserting screws first and then fixing them is incorrect, which may cause damage to the accessories or prevent installation.



Correct method:

Fix the accessories to align with the hole position, and then tighten the screws, so that they are not easily damaged.