DIMENSIONS

Rough-In Dimensions

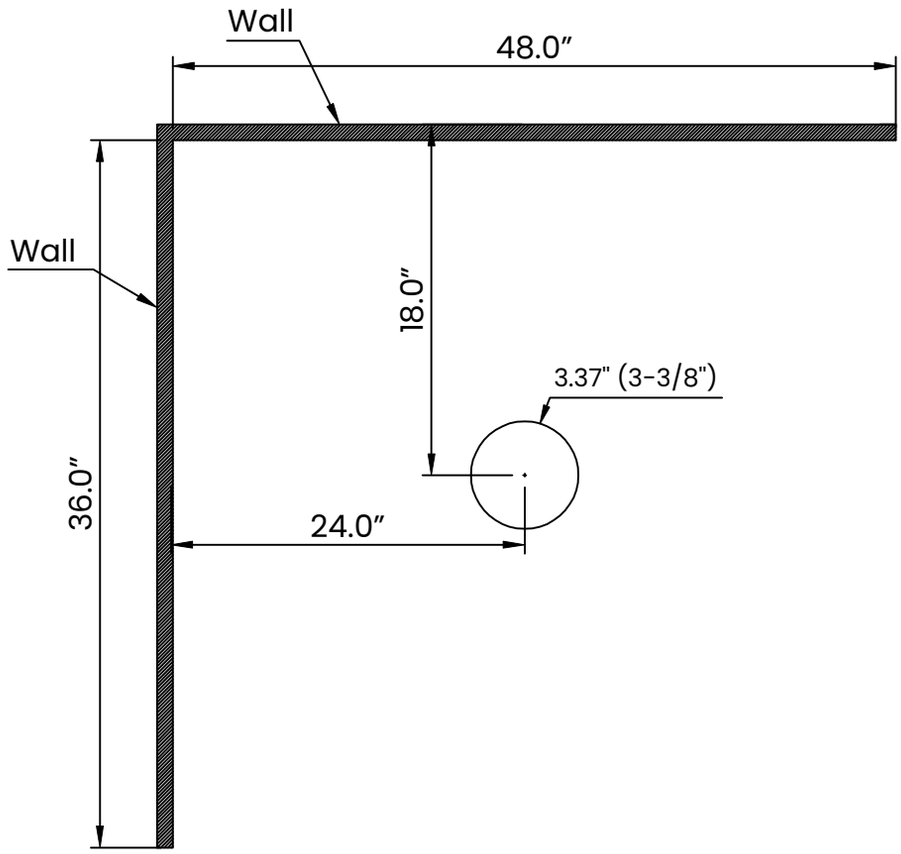

Product Dimensions

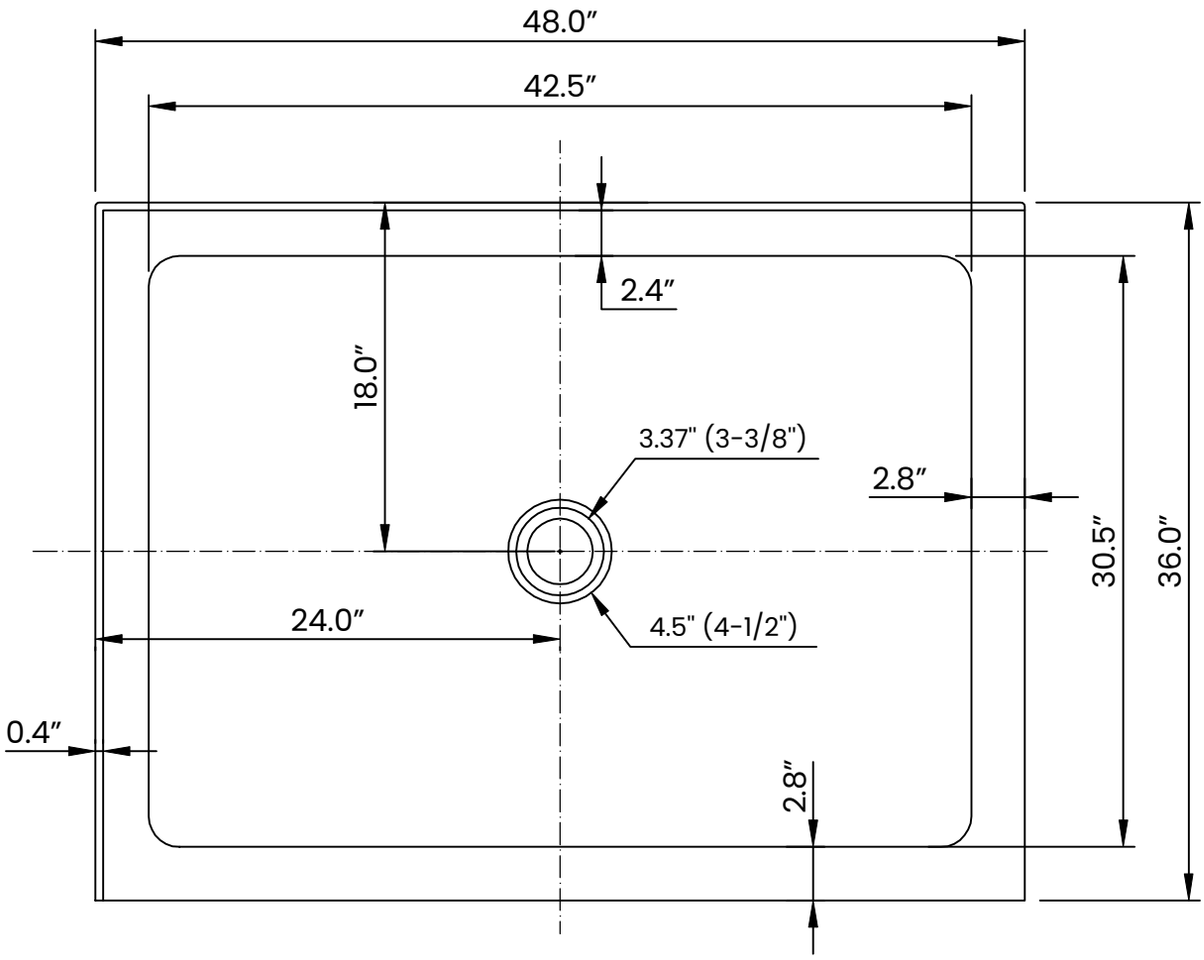

Model number:
NTM-908-48MB-CR

DIMENSIONS

Streamline

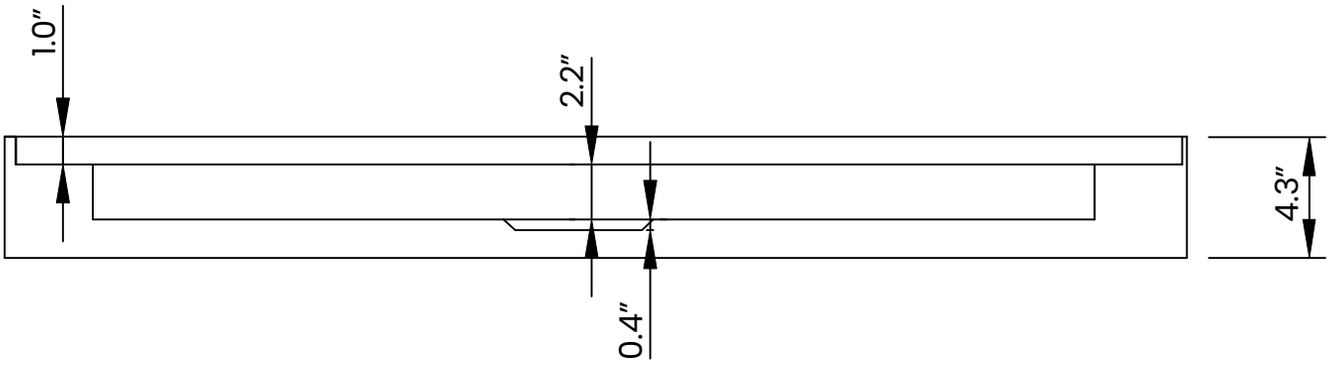

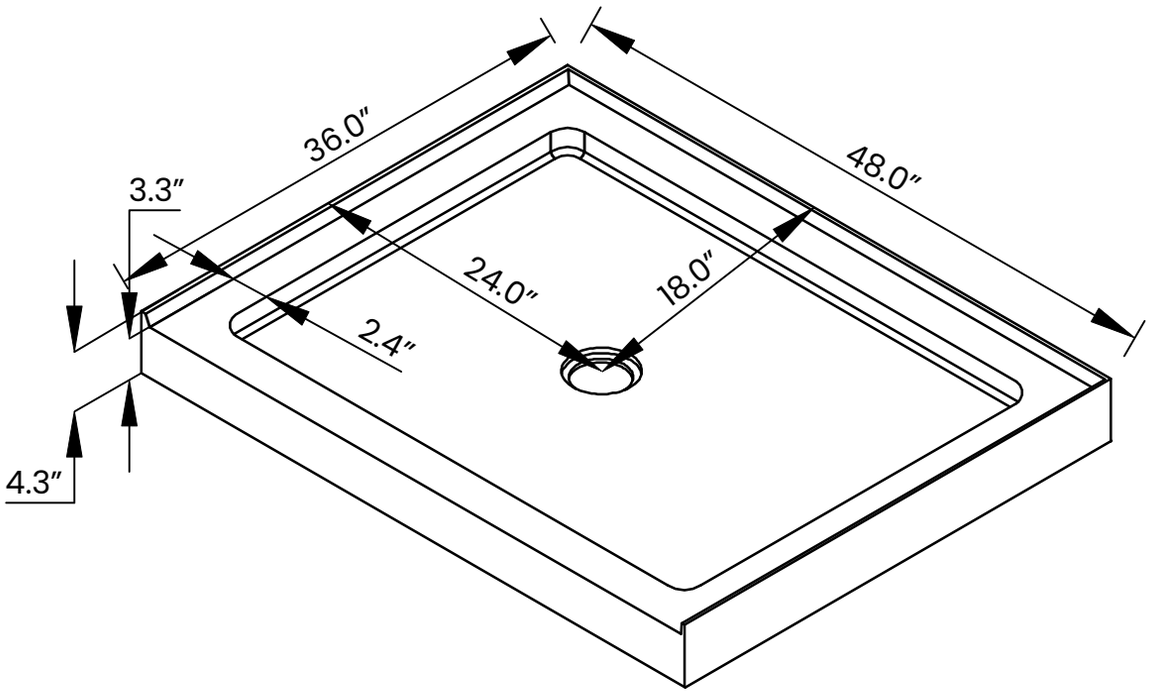

Model number:
P-120-CH

DIMENSIONS
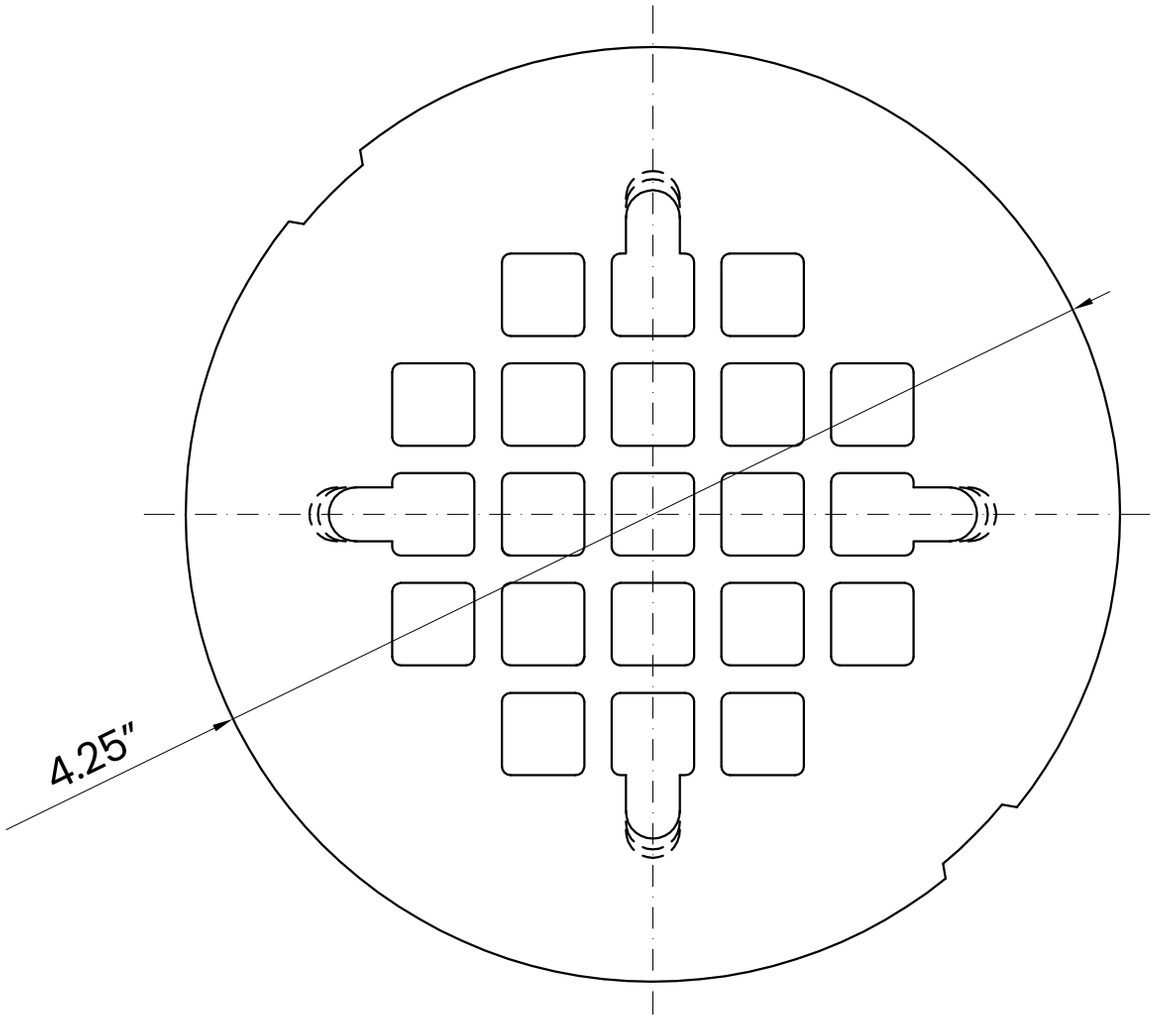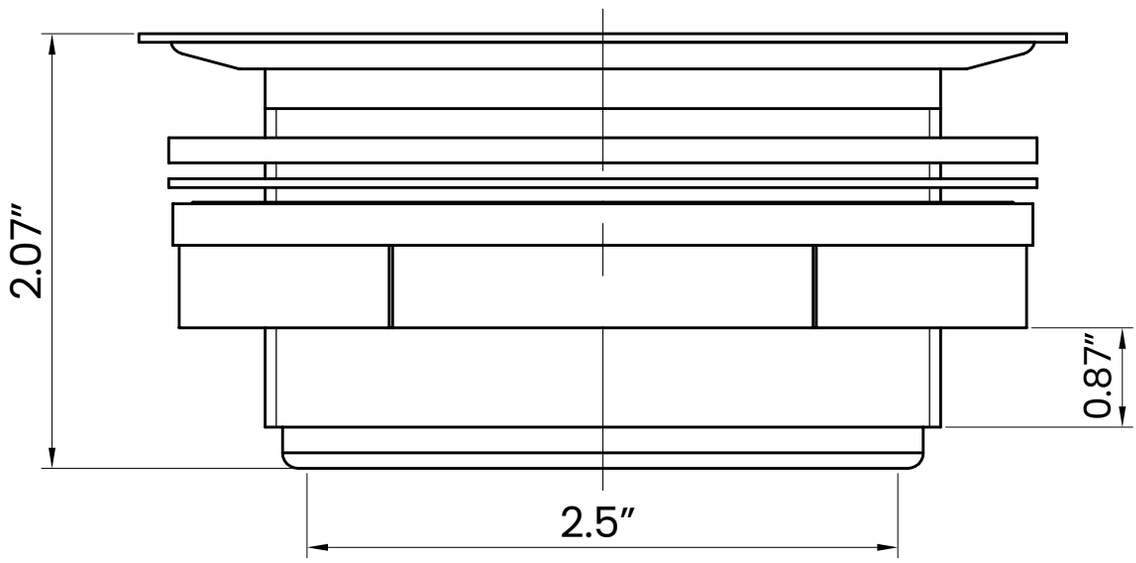
Streamline