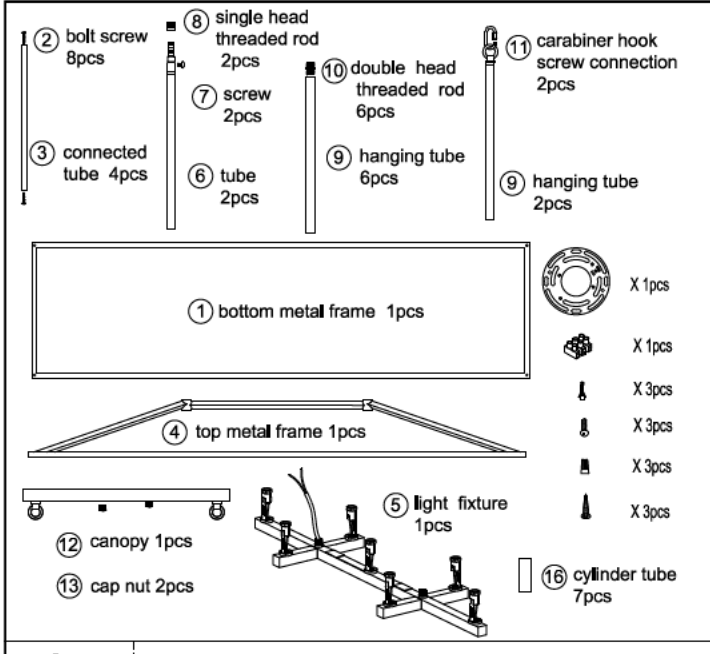

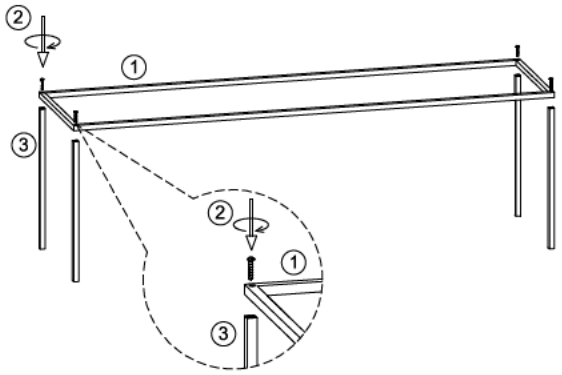

1. Install the tube ③ on the bottom metal frame ① with screw ②.

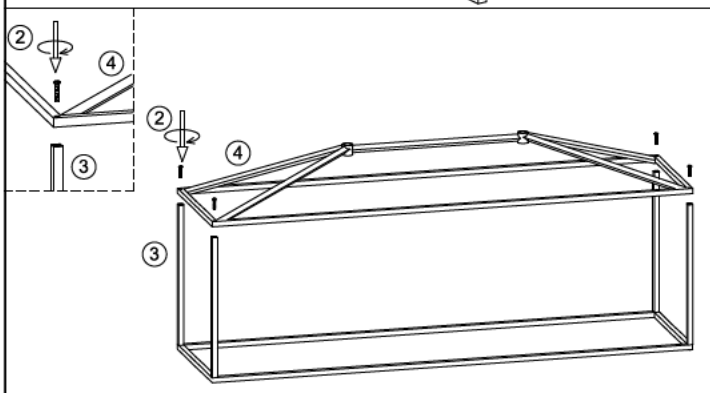

2.Install the top frame ④ on the tube ③ with screw ②.
(Fristly locate the frame ④ on the tube ③ with screw ②, and adjust the frame to the right shape, after that rotate screw ② to make the whole frame tighten.)

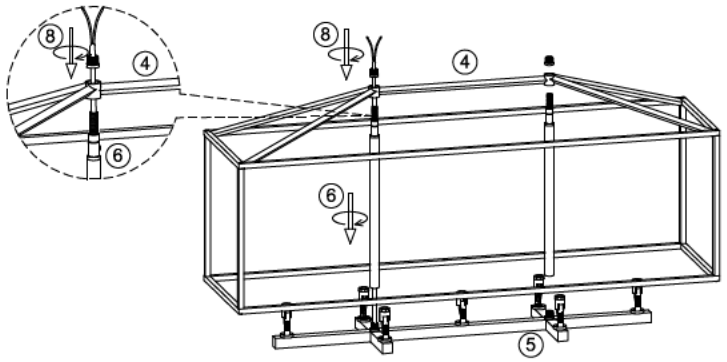

3、Let the wire go through tube ⑥,rotate tube ⑥ to fix the tube to the light fixture ⑤.
4、Remove out the single head threaded rod ⑧ from tube ⑥, let the wire go through the metal frame ④, and the single head threaded rod ⑧ , rotate threaded rod ⑧ to fasten the tube ⑥ and frame ④ to light fixture ⑤.

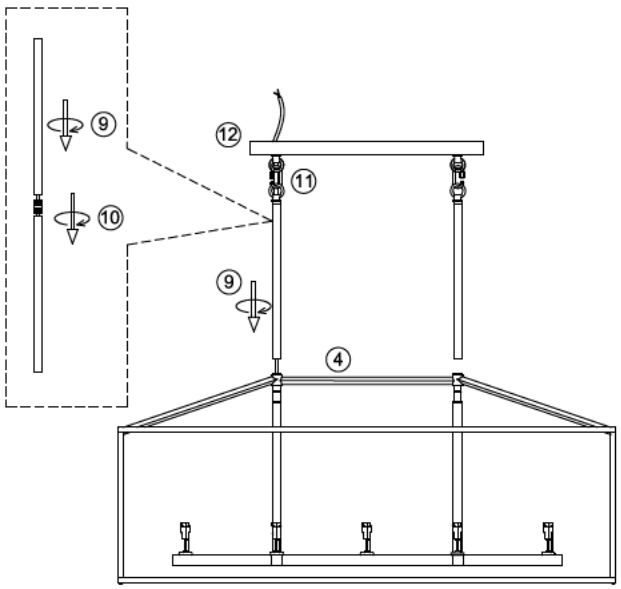

5.Let the wire go through the hanging tube ⑨, rotate to install the tube ⑨ to the light fixture ④, hang the fixture to the canopy ⑫ with carabiner hook screw connection ⑪, let the wire go through canopy ⑫. (can connect more tubes to get the heigthen you need).

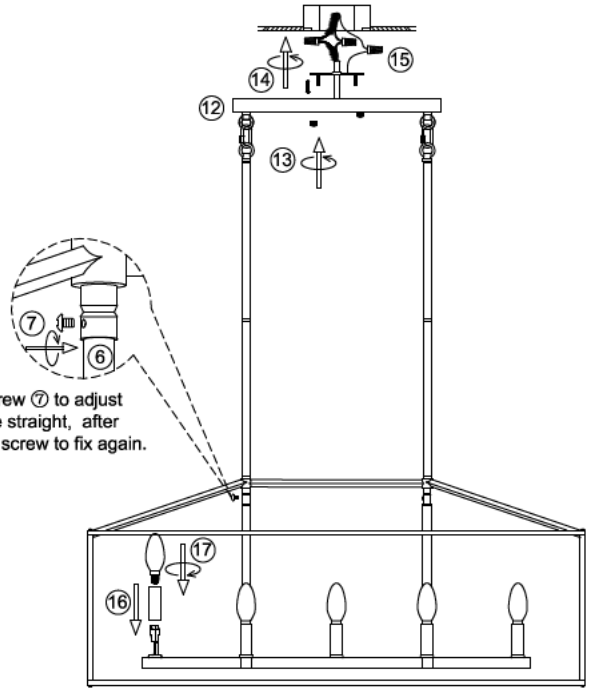

Loosen the screw ⑦ to adjust the light fixture straight, after that rotate the screw to fix again.

6.Install the bracket on the ceiling junction box with screw ⑭.
7.Connect the wire to your home line.
8.Install the fixture to the bracket with cap nuts ⑬.
9.Put the cylinder tube ⑯ on the bulb holder and Install the bulbs ⑰.

Please read carefully before installation!!!
Note : Please make sure that the electricity is powered off during installation !
Only a professional electrician should install this kind of product !