ASSEMBLY INSTRUCTION

ARMOIRE

A Top Panel

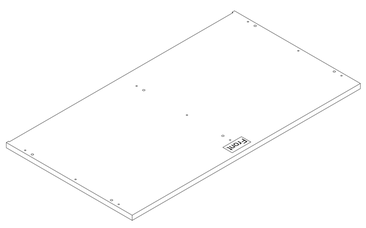

1pc

B Left Side Panel

1pc

C Right Side Panel

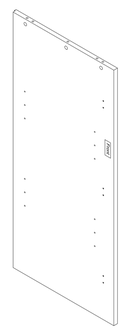

1pc

D Bottom Panel

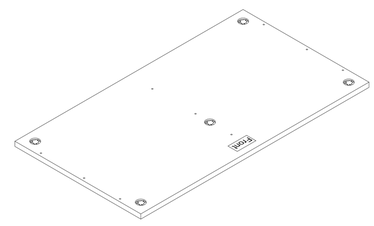

1pc

E Partition

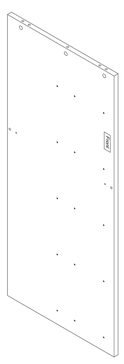

1pc

F Back Plywood

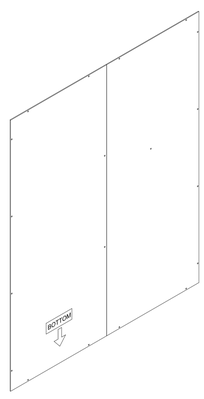

1pc

G Leg

4pcs

H Support Stand

1pc

I Center Bar

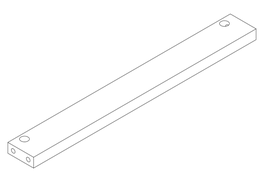

2pcs

J Door

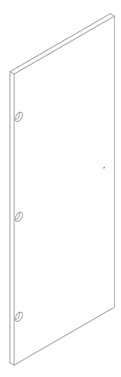

1pc

K Shelving

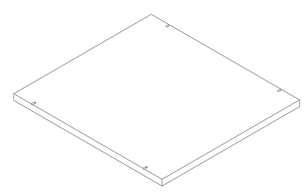

2pcs

L Drawer Front

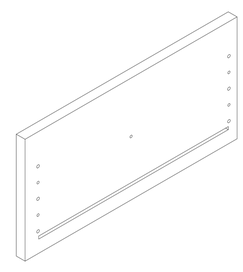

5pcs

M Left Drawer Side

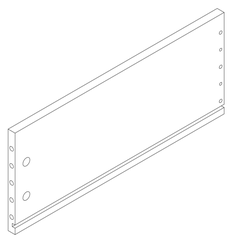

5pcs

N Drawer Back

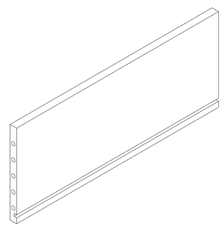

5pcs

O Drawer Base

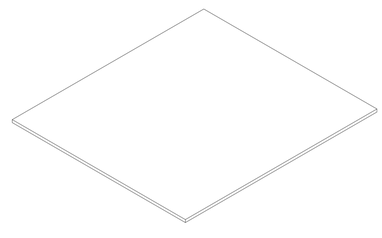

5pcs

P Right Drawer Side

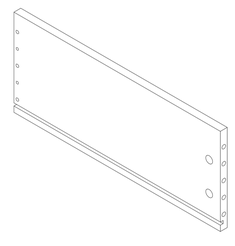

5pcs

Q Screw
M3 x 16mm

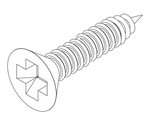

60pcs

R Screw
M4 x 38mm

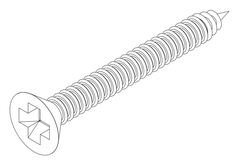

9pcs

S Dowel
M8 x 35mm

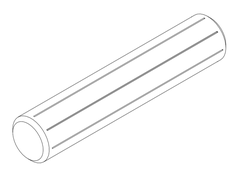

16pcs

T Cam Lock
15 x 12mm

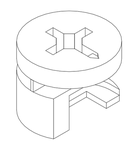

53pcs

U Cam Bolt
5 x 25mm

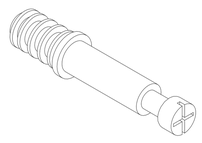

53pcs

V Dowel
M6 x 30mm

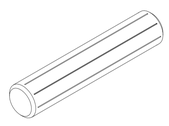

60pcs

W Runner
250mm

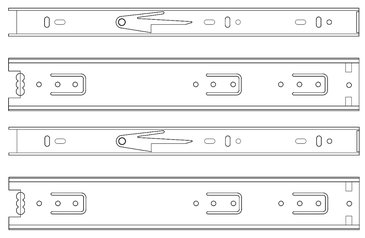

5sets

X Cam Lock Cover
17 x 5mm

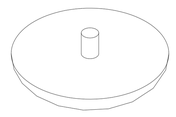

53pcs

Y Panhead Screw
M4 x 16mm-Black

19pcs

Z Hinge
H-7

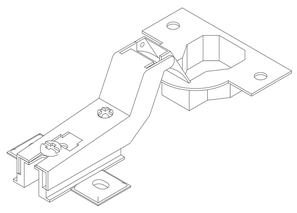

3pcs

AA Shelving Support

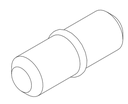

8pcs

AB Panhead Screw
M4 x 22mm

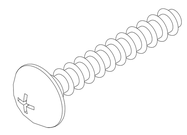

6pcs

AC Handle

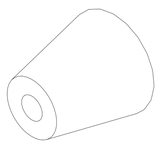

6pcs

AD Screw
M4 x 16mm

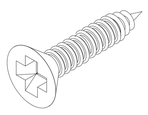

12pcs

AE Anti-Tipping Kit

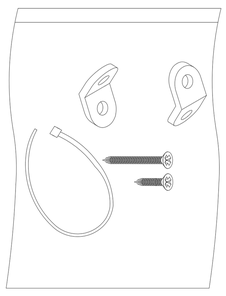

1set

These page lists all the contents included in the box. Please take the time to identify the hardware as well as the individual components to this product. As you unpack and prepare for assembly, place the contents on a carpeted or padded area to protect them from damage.

1 Attach Cam Bolt (U) to Top Panel (A).

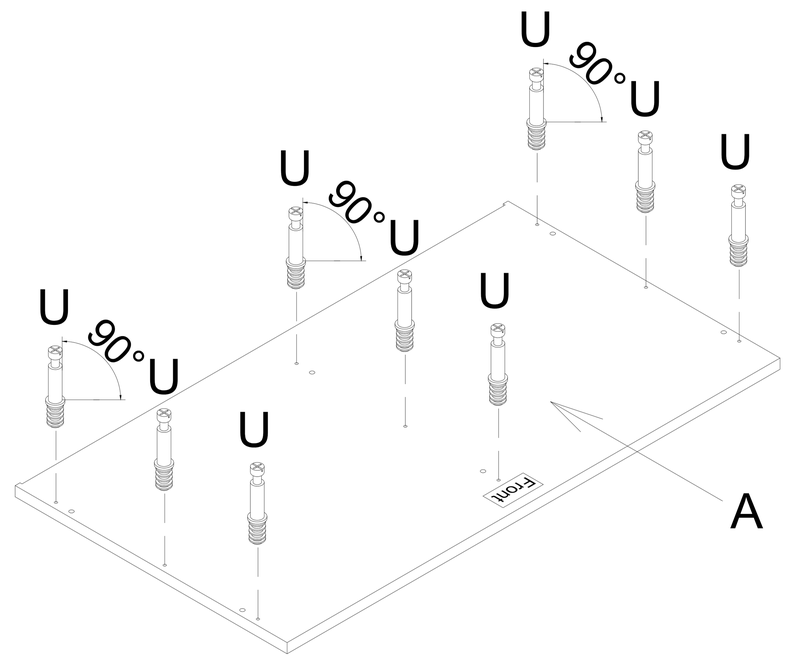

2 Attach Dowel (S) and Cam Lock (T) to Center Bar (I).

NOTE : - Make sure arrows on each Cam Lock (T) points towards nearest edge with holes.

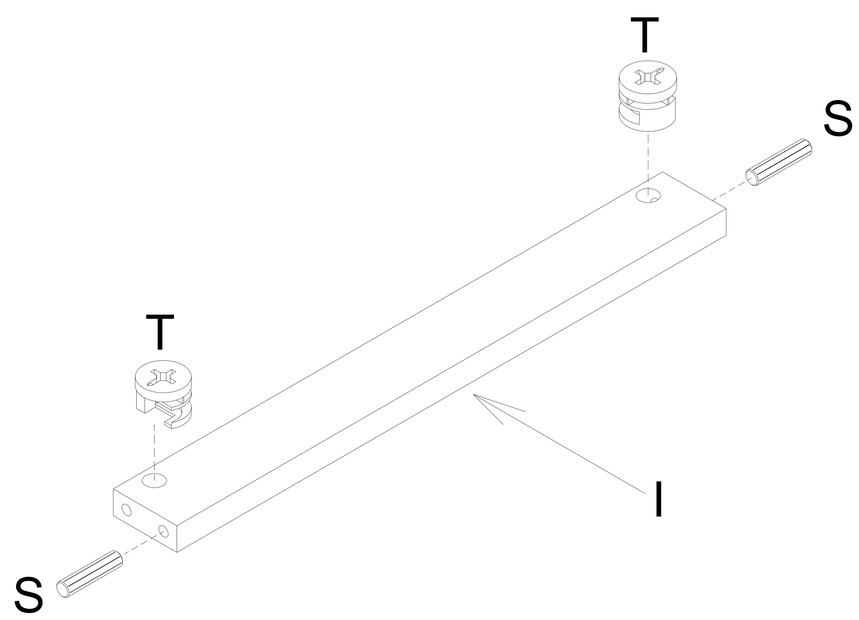

3 Attach Dowel (S) and Cam Lock (T) to Left & Right Side Panel (B & C). Attach Cam Bolt (U) to Left Side Panel (B).

NOTE : - Make sure arrows on each Cam Lock (T) points towards nearest edge with holes.

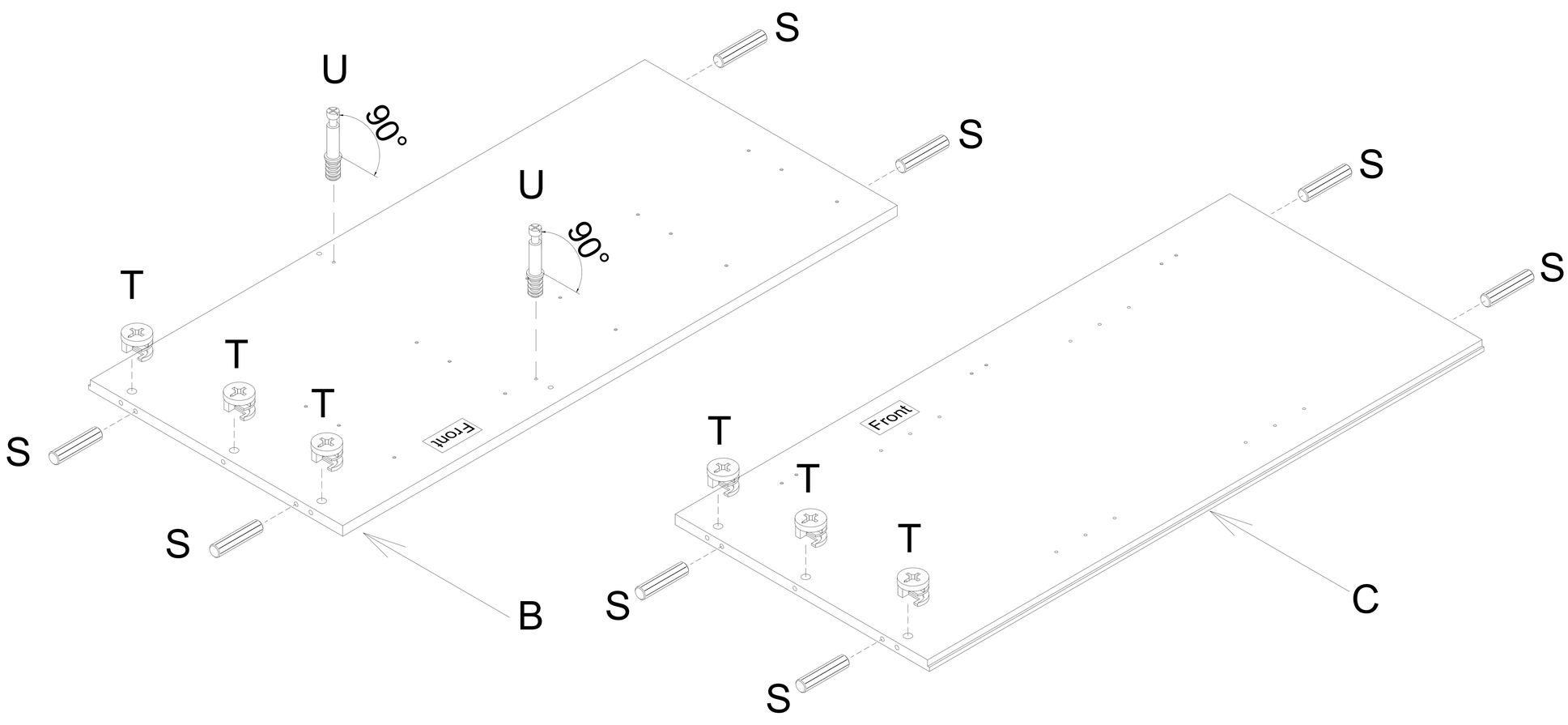

4 Attach Runner (W) to Left Side Panel (B) using Screw (Q) with screwdriver (not provided).

NOTE : - Screw (Q) should be assembled from the front of the runner. Start from Q^1, Q^2 then Q^3.
- Make sure the screws are installed vertically without slant to ensure screw sits properly in the hole.

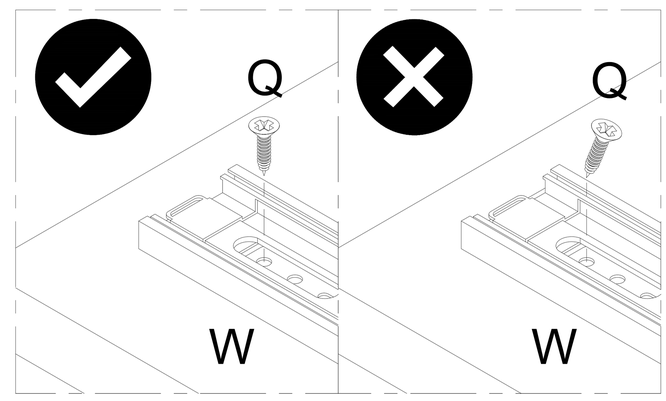

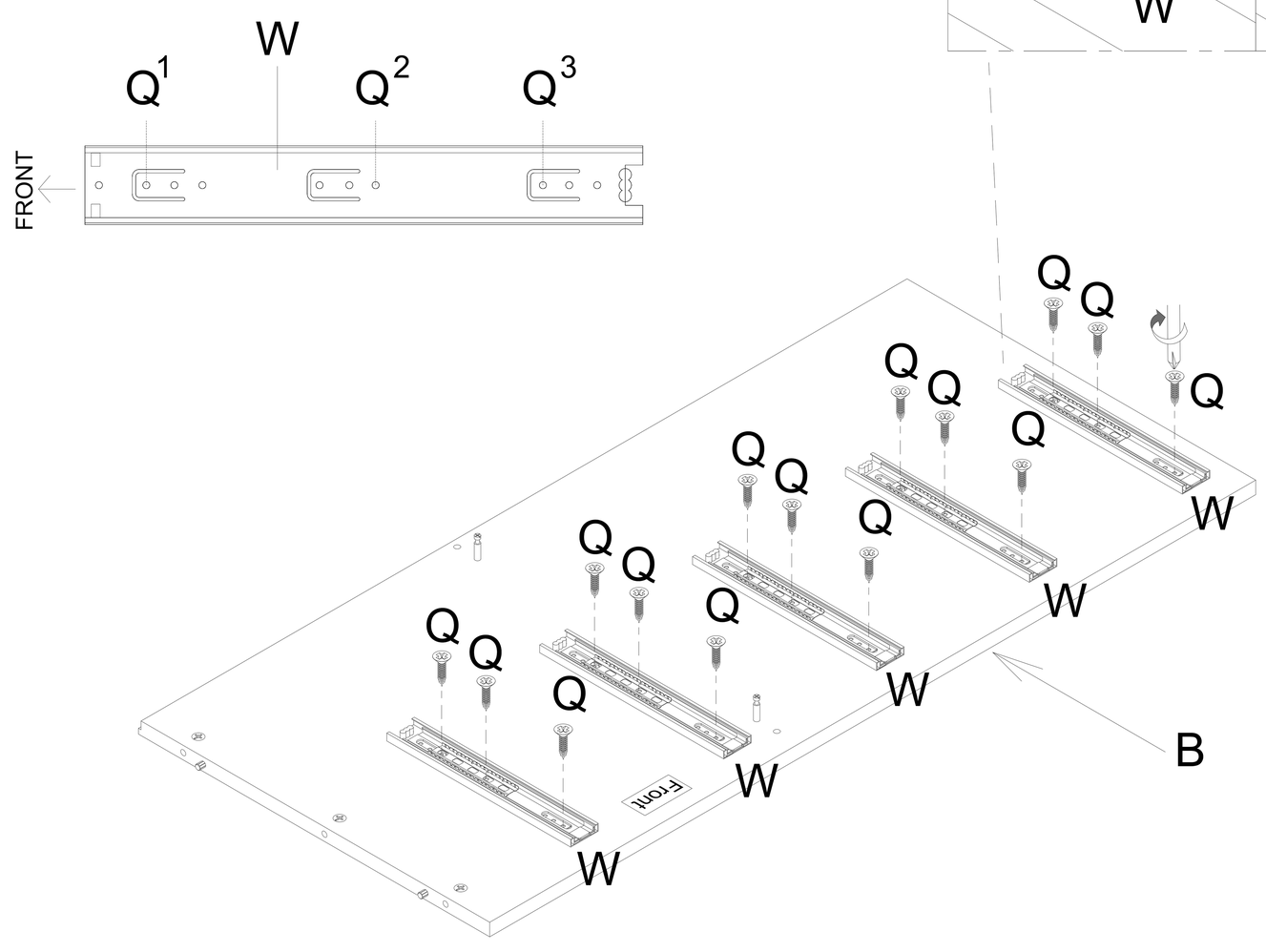

EXTENSION RUNNER DISASSEMBLY STEPS:

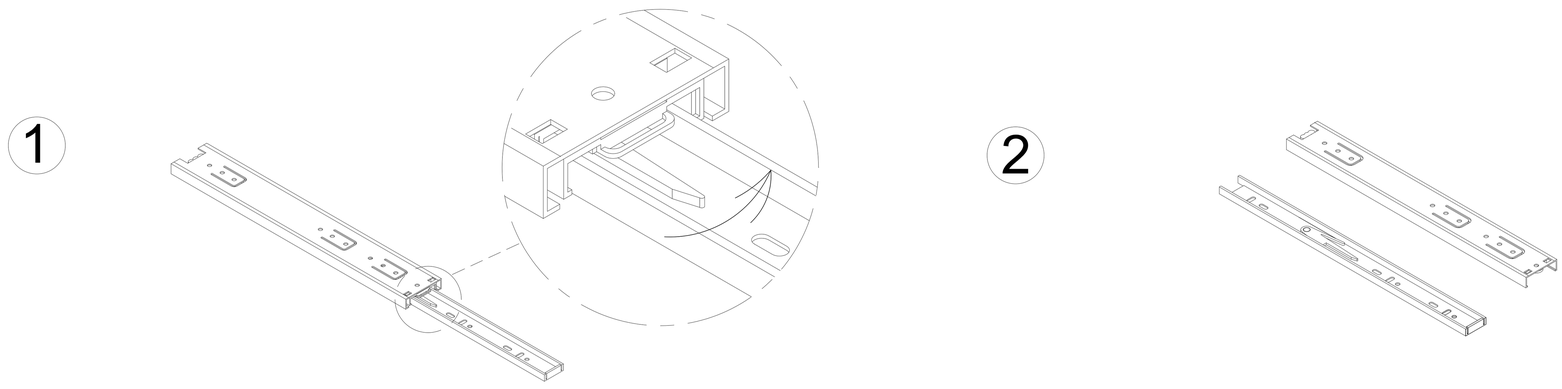

Disassemble the Runner (W) to 2 parts. Fix 1 part on the Left Side Panel (B), and fix the other part on the Left Drawer Side (M).

5 Attach Dowel (S), Cam Lock (T) and Cam Bolt (U) to Partition (E).

NOTE : - Make sure arrows on each Cam Lock (T) points towards nearest edge with holes.

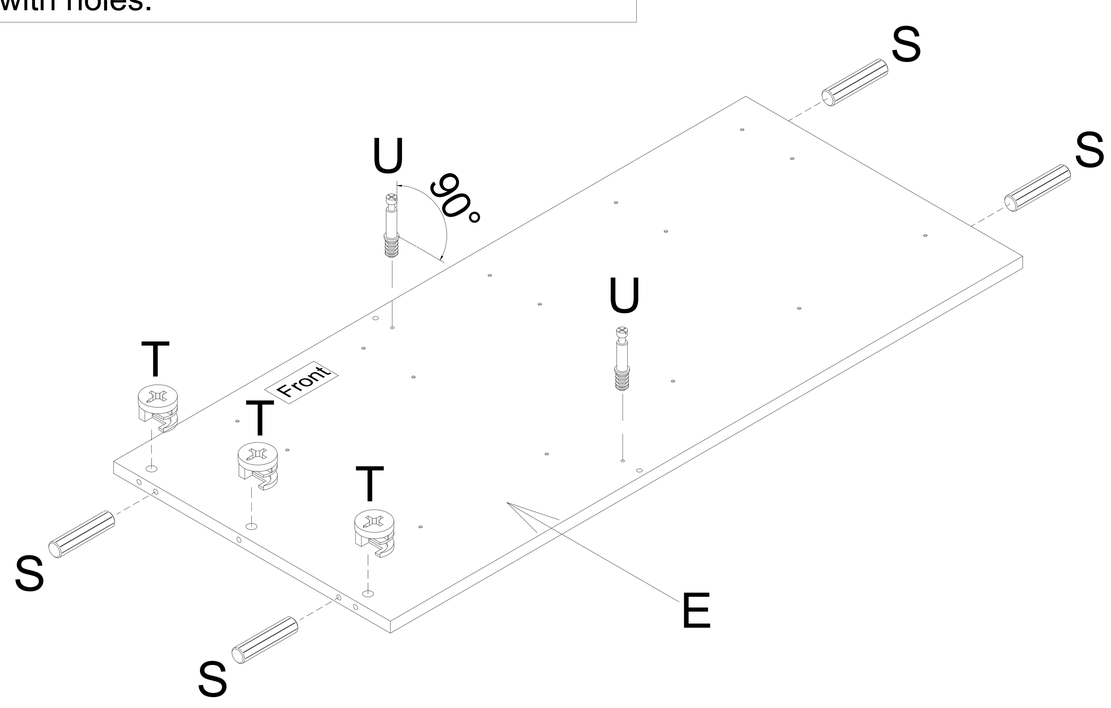

6 Attach Runner (W) to Partition (E) using Screw (Q) with screwdriver (not provided).

NOTE : - Screw (Q) should be assembled from the front of the runner. Start from Q^1, Q^2 then Q^3.

- Make sure the screws are installed vertically without slant to ensure screw sits properly in the hole.

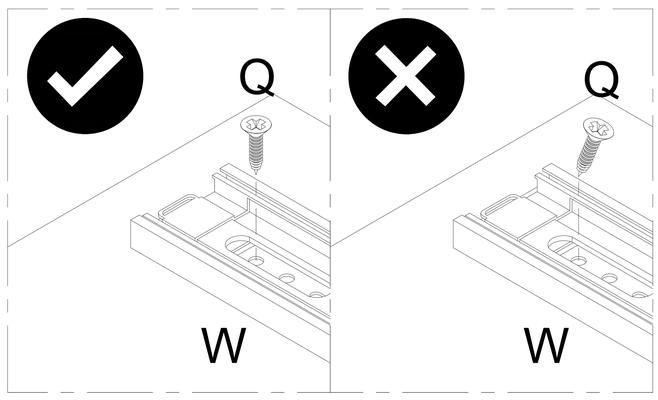

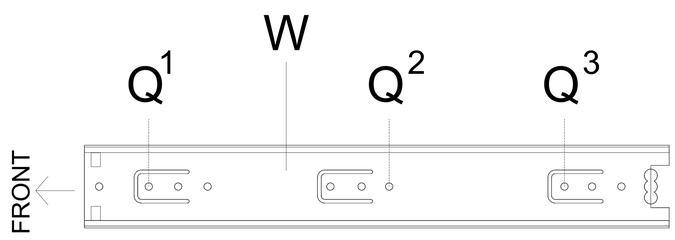

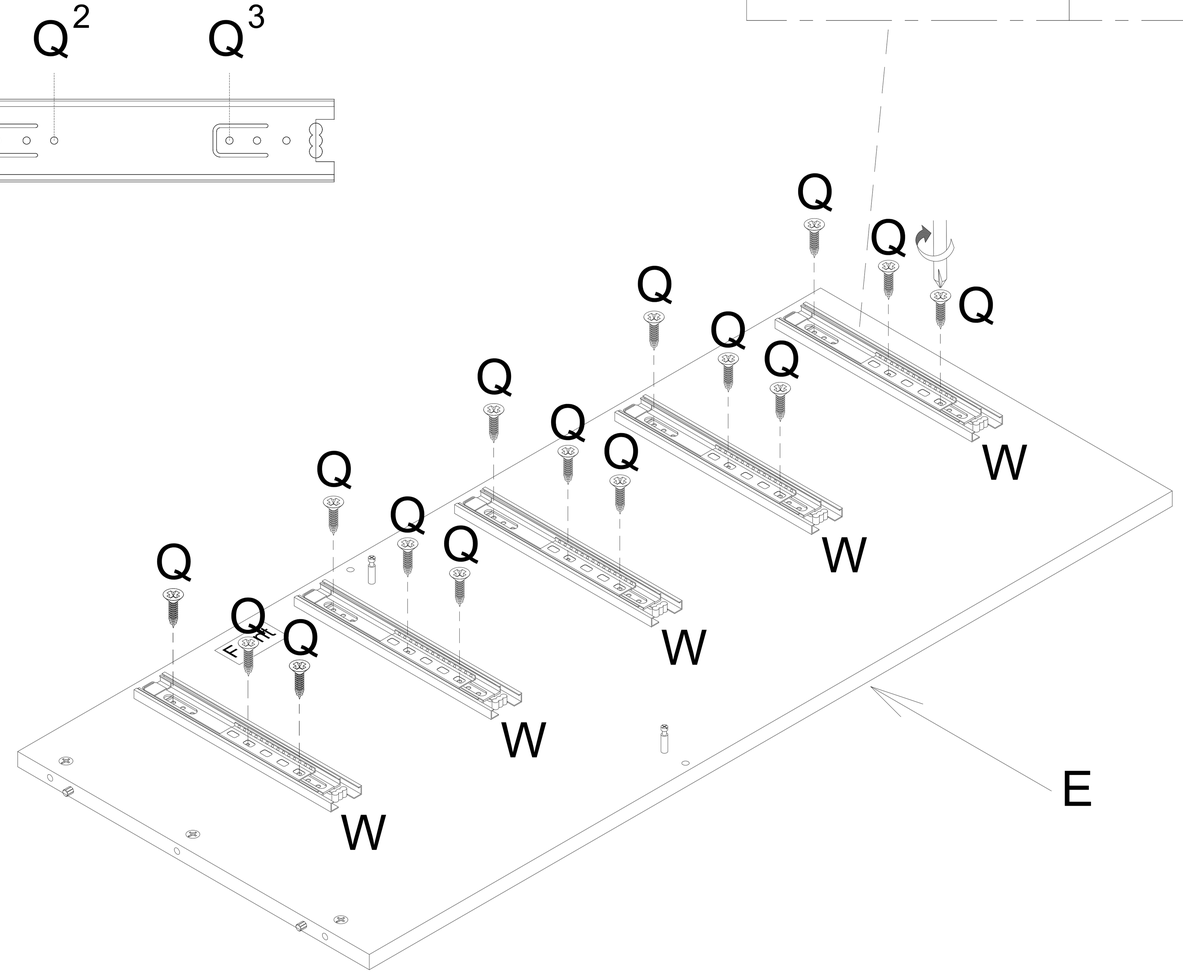

EXTENSION RUNNER DISASSEMBLY STEPS:

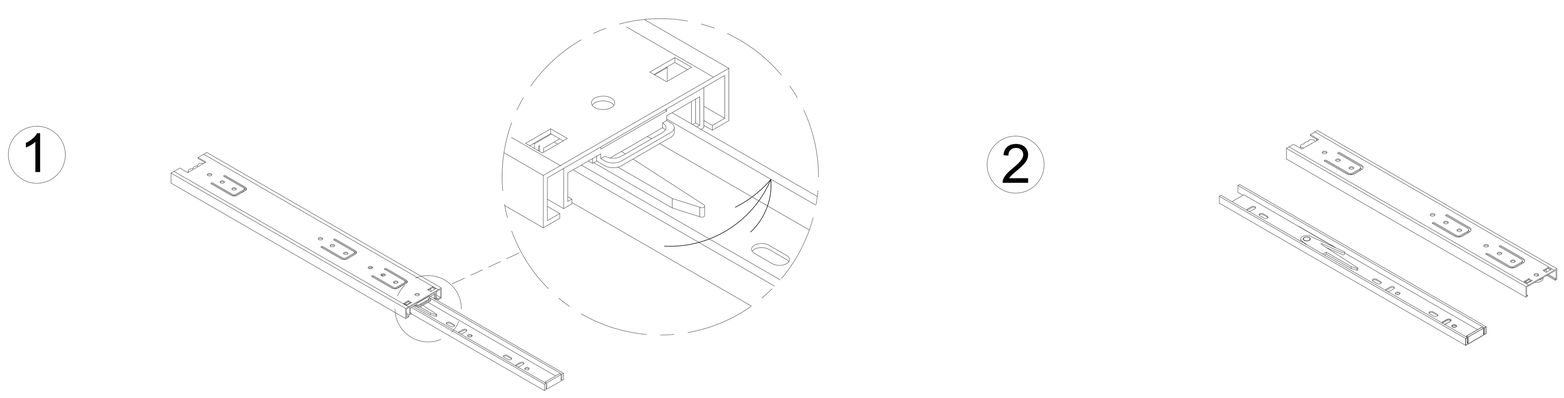

Disassemble the Runner (W) to 2 parts. Fix 1 part on the Partition (E), and fix the other part on the Right Drawer Side (P).

7 Attach Hinge (Z) to Door (J) using Screw (AD) with screwdriver (not provided).

NOTE : - Do not over tighten the Screw (AD).

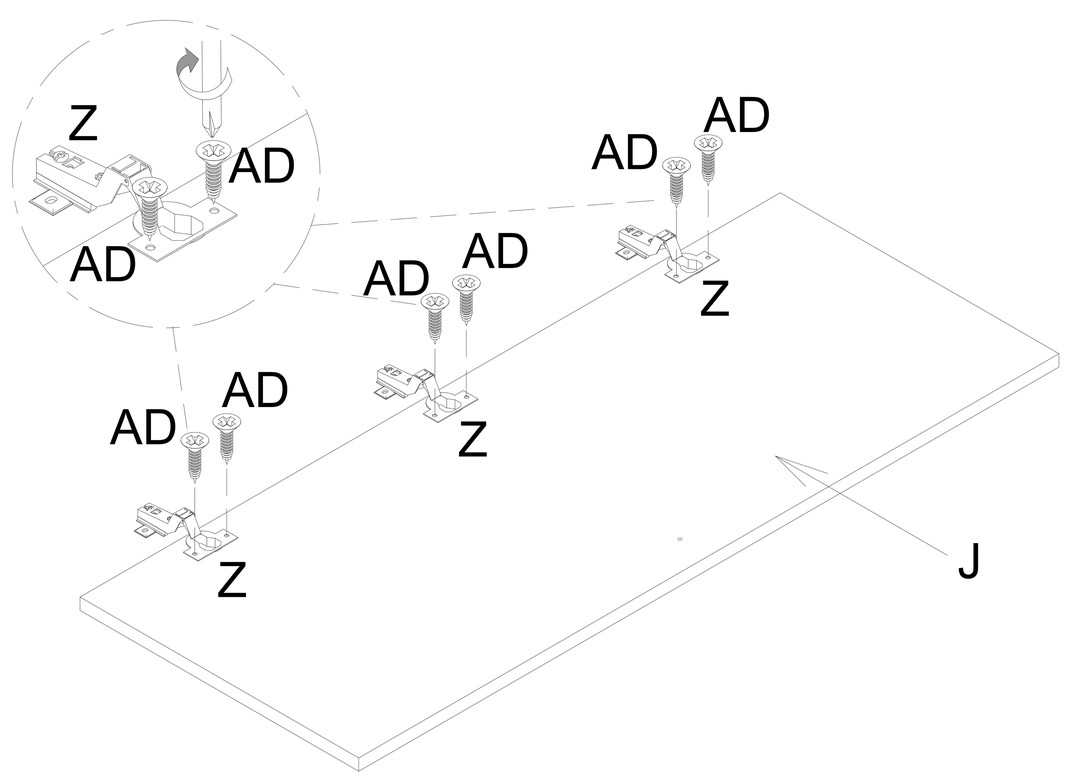

8 Attach Center Bar (I) to Left Side Panel (B) and Partition (E), and secure with the Cam Lock (T) attached in the Step 2. Cover Cam Lock (T) with Cam Lock Cover (X).

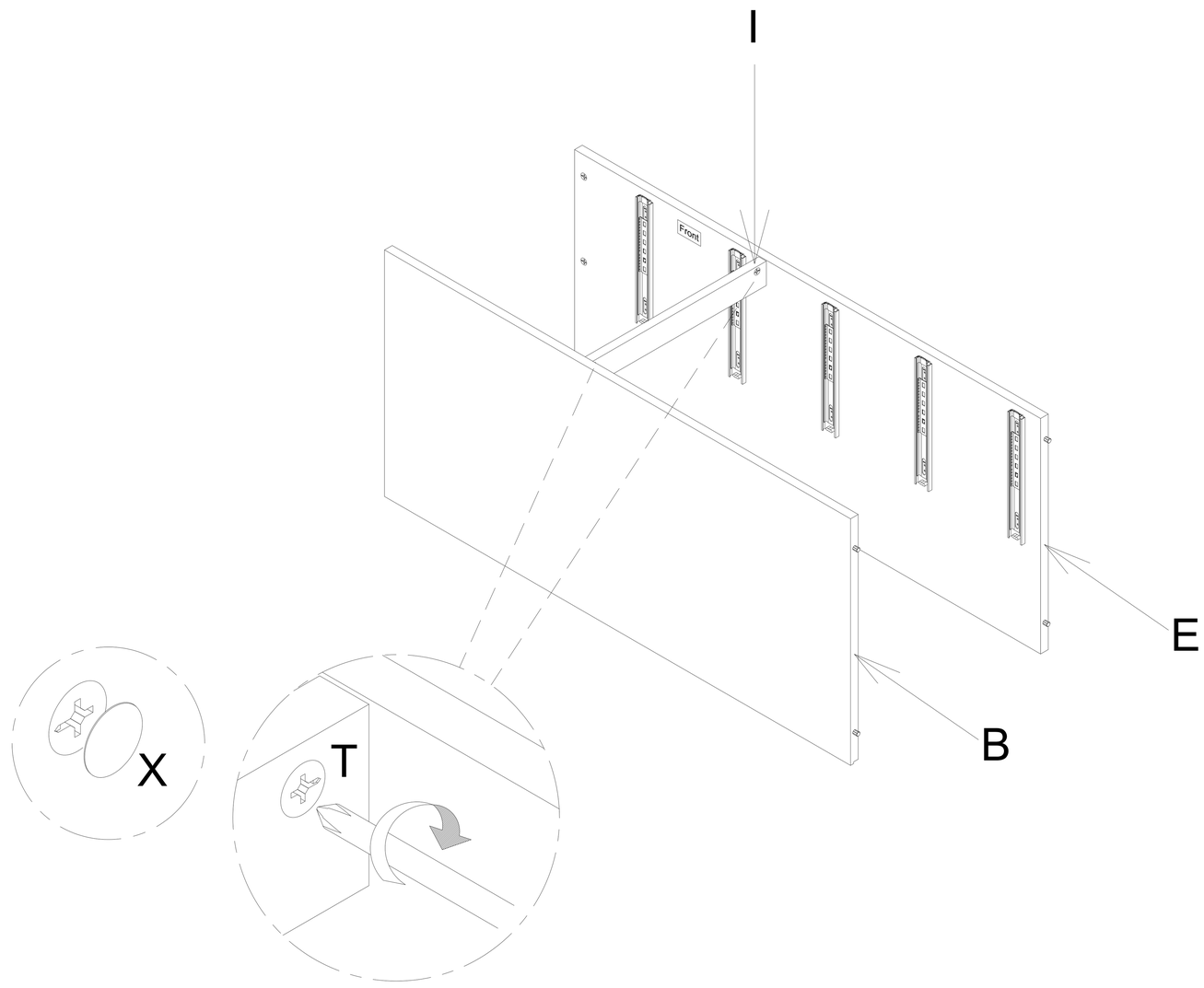

9 Attach Bottom Panel (D) to Left & Right Side Panel (B & C) and Partition (E) using Screw (R) with screwdriver (not provided).

NOTE : - Do not over tighten the Screw (R).

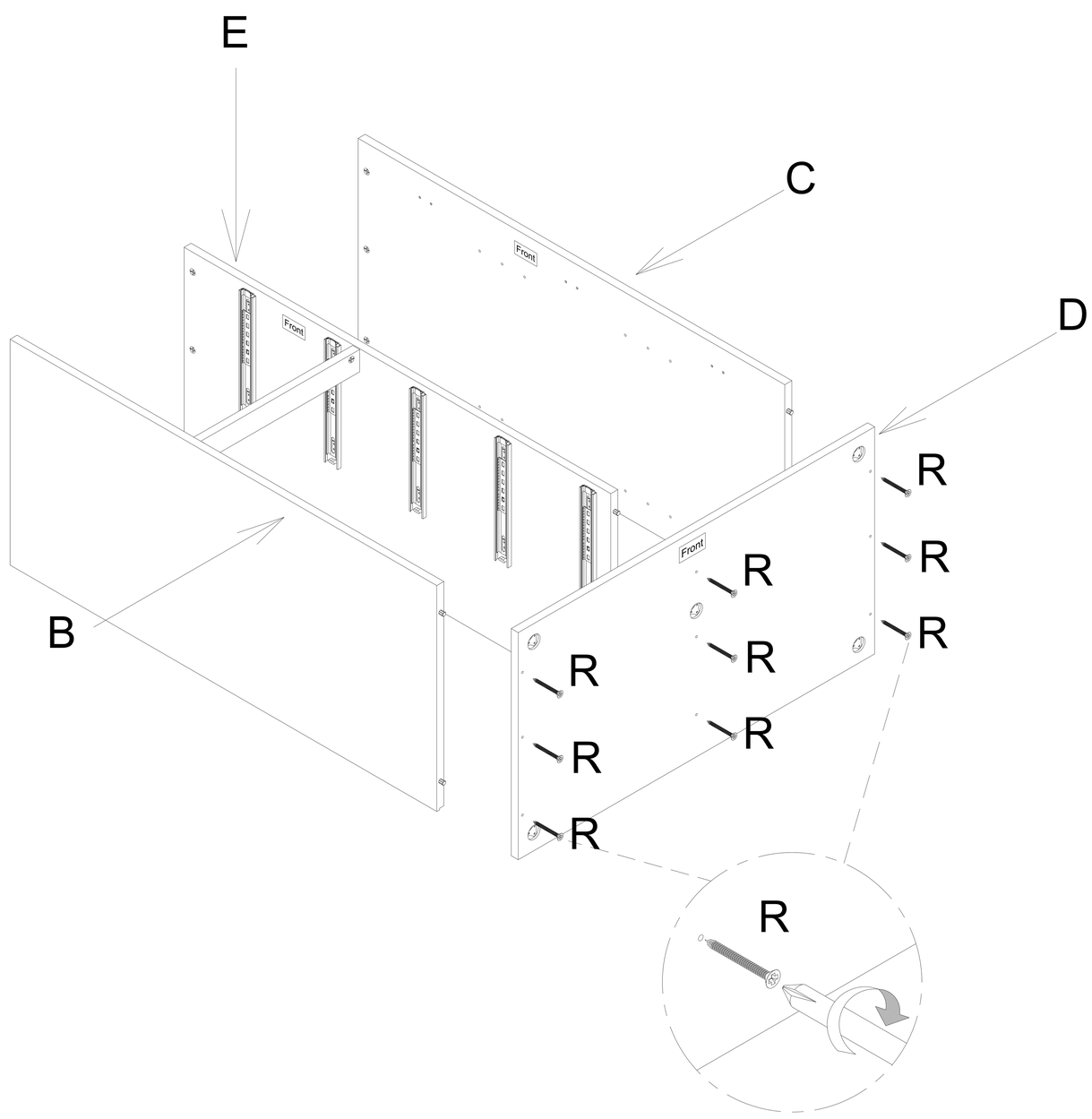

10 Attach Leg (G) and Support Stand (H) to Bottom Panel (D) and turn each clockwise until it securely engaged.

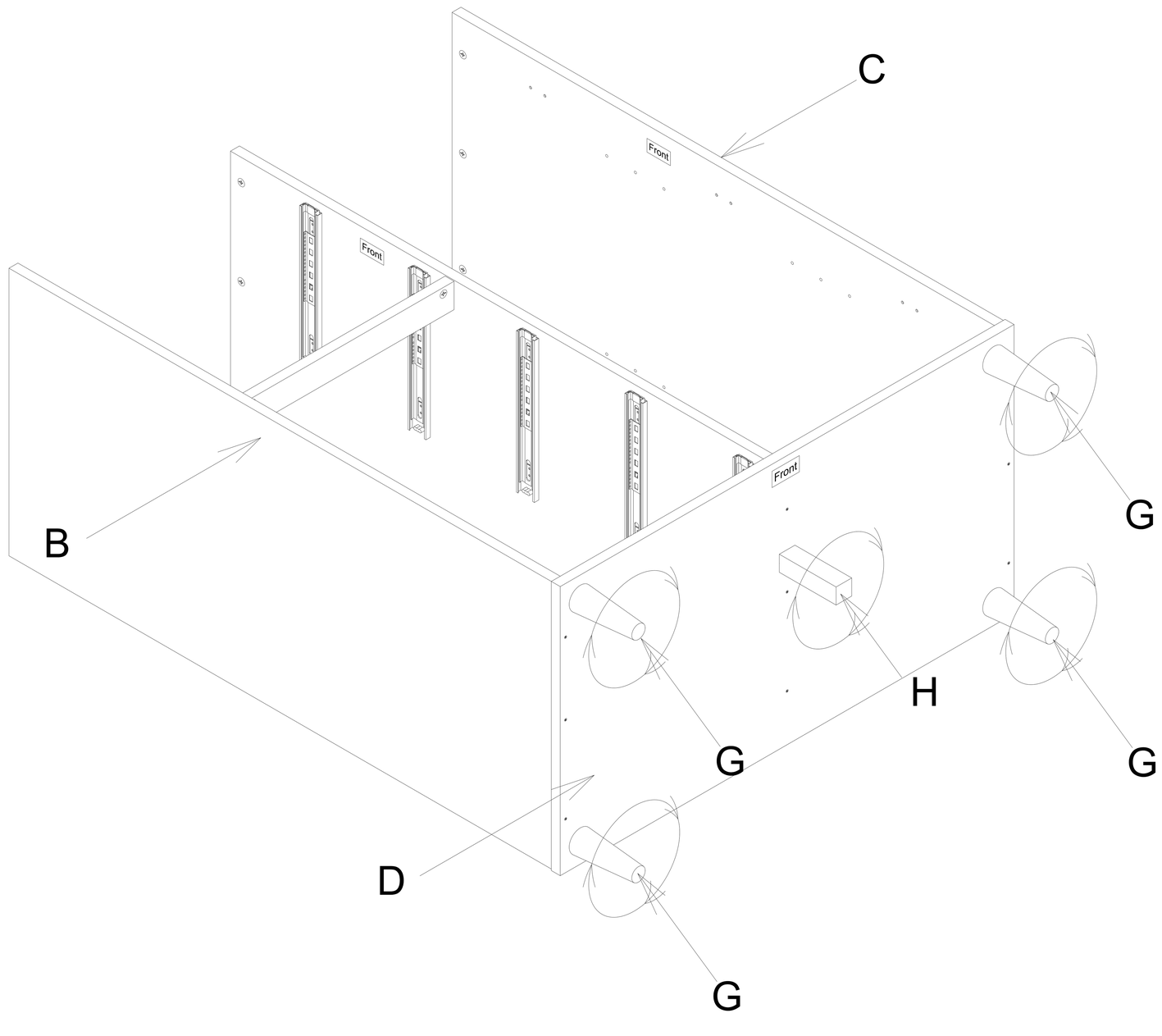

11 Attach Top Panel (A) to Left & Right Side Panel (B & C) and Partition (E) and secure with Cam Lock (T) attached in the Step 3 and Step 5. Cover Cam Lock (T) with Cam Lock Cover (X).

NOTE : - Do not over tighten the Cam Lock (T).

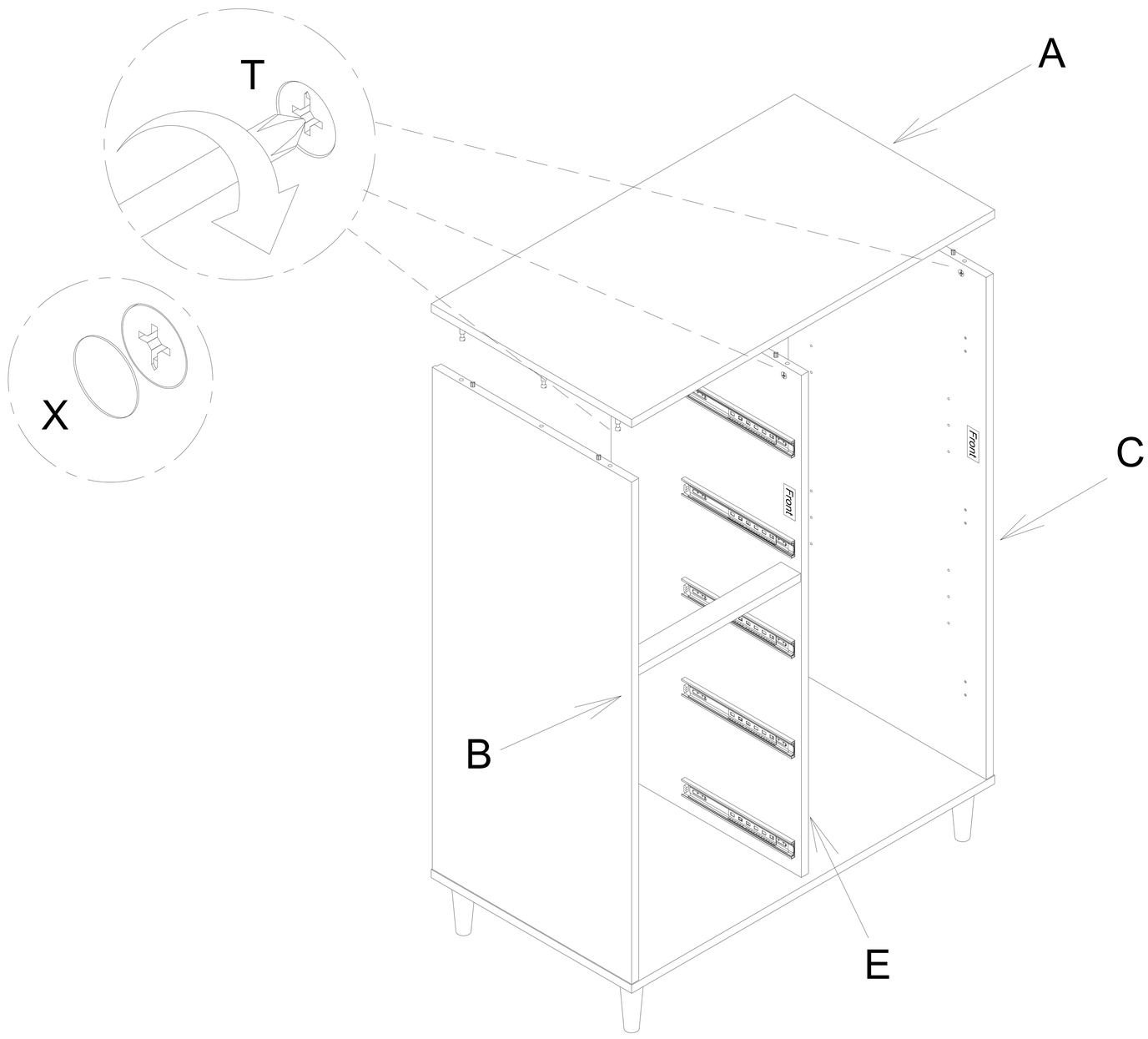

12 Attach Back Plywood (F) to the assembled unit using Panhead Screw (Y) with screwdriver (not provided).

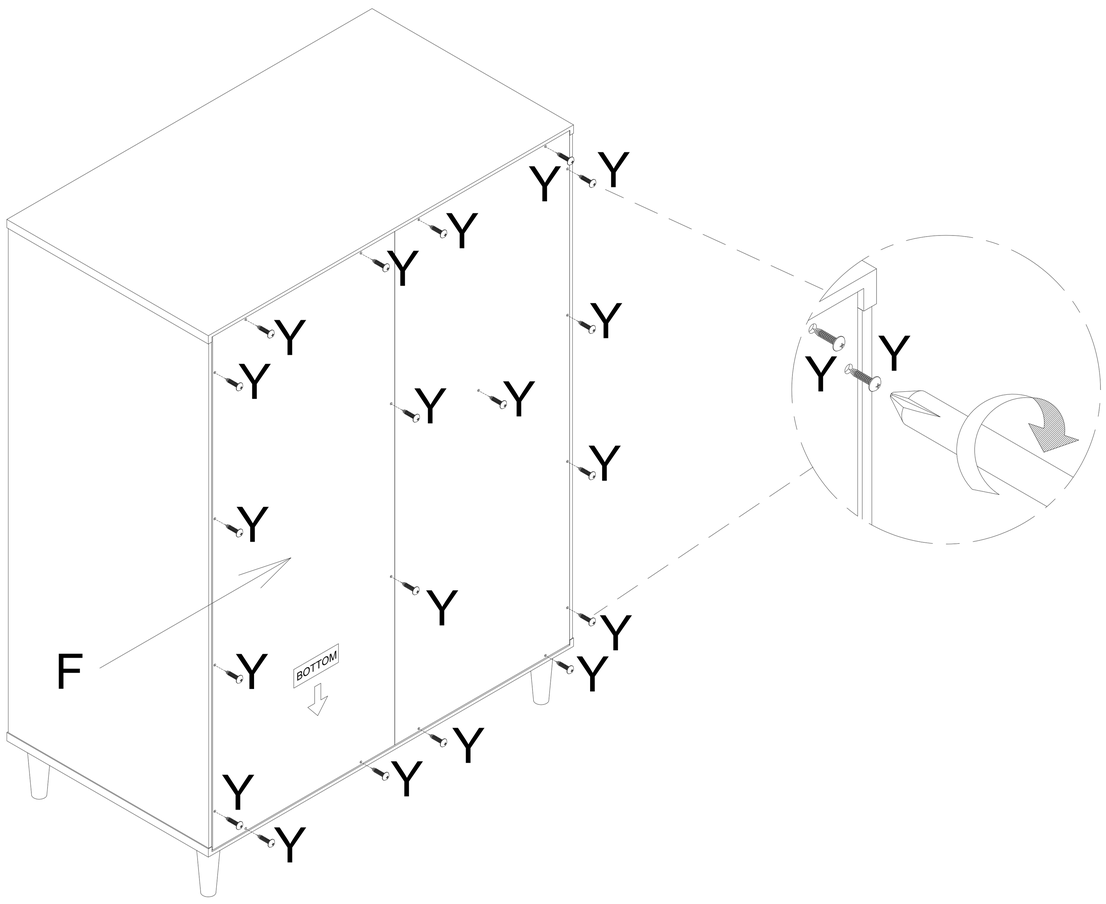

13 Attach Door (J) to Right Side Panel (C) using Hinge (Z) and Screw (AD) with screwdriver (not provided).

NOTE : - Do not over tighten the Screw (AD).

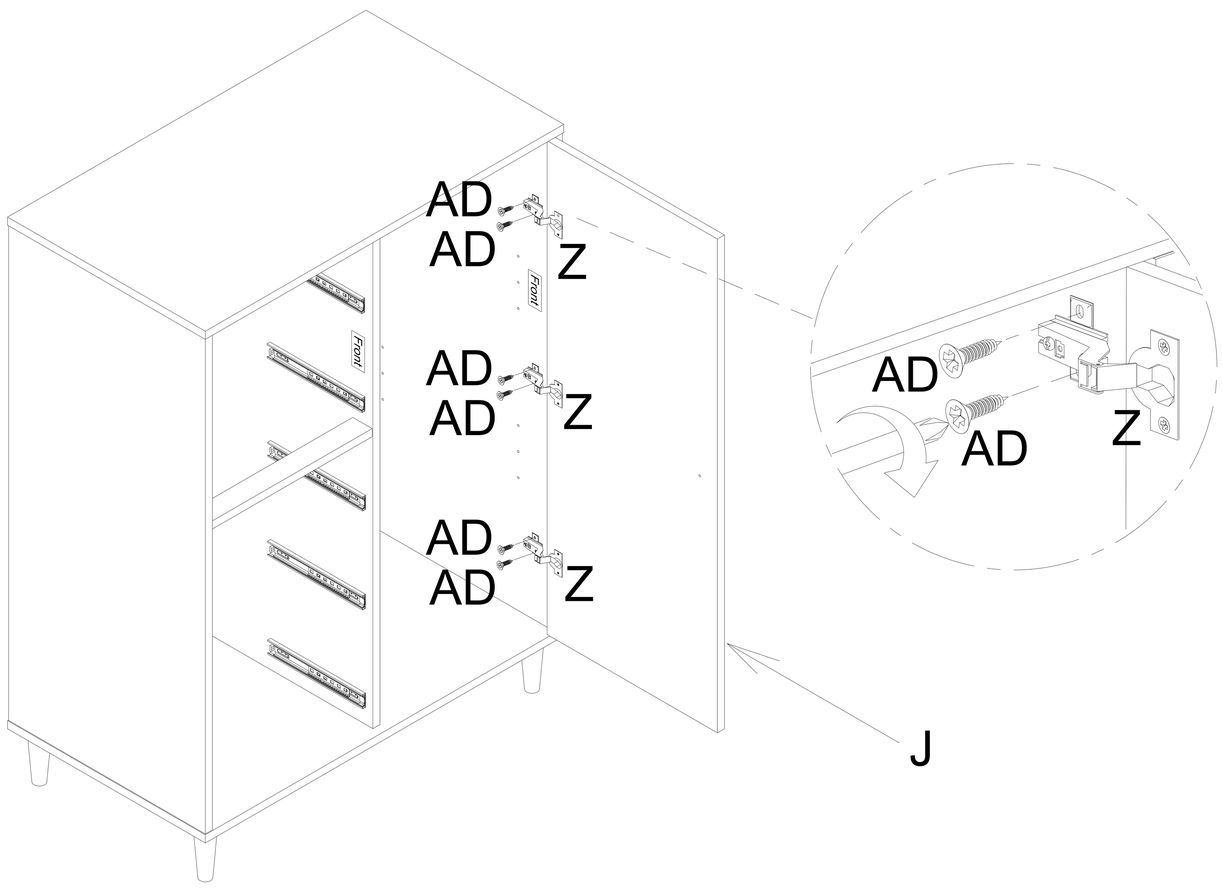

HINGE ADJUSTMENT: If the doors do not appear squared or aligned, loosen or tighten the appropriate screws on each case hinge as illustrated.

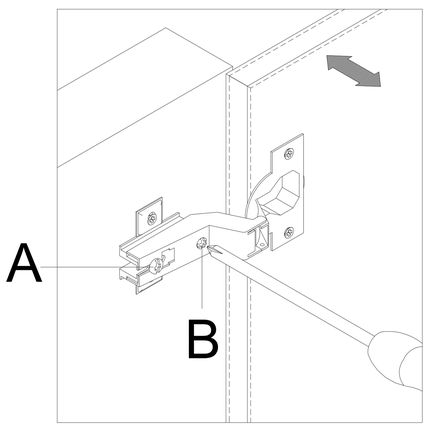

1) Side to side adjustment: Loosen Screw A, adjust gap with Screw B, and re-tighten Screw A.

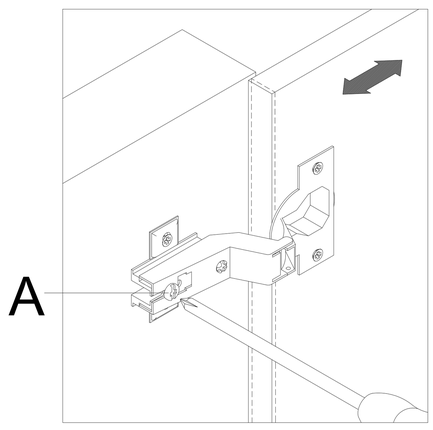

2) Depth adjustment: Loosen Screw A, push Hinge Arm forwards or backwards, and re-tighten Screw A.

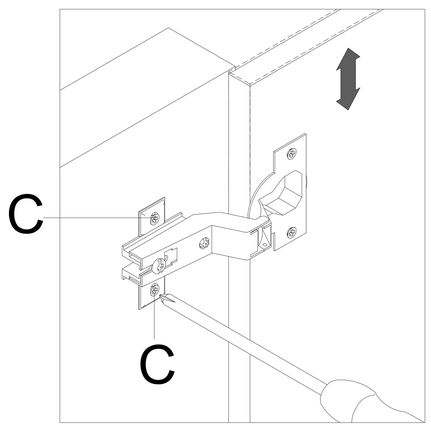

3) Height adjustment: Loosen Screw C, adjust door height, and re-tighten Screw C.

14 Attach Handle (AC) to Door (J) using Panhead Screw (AB) with screwdriver (not provided).

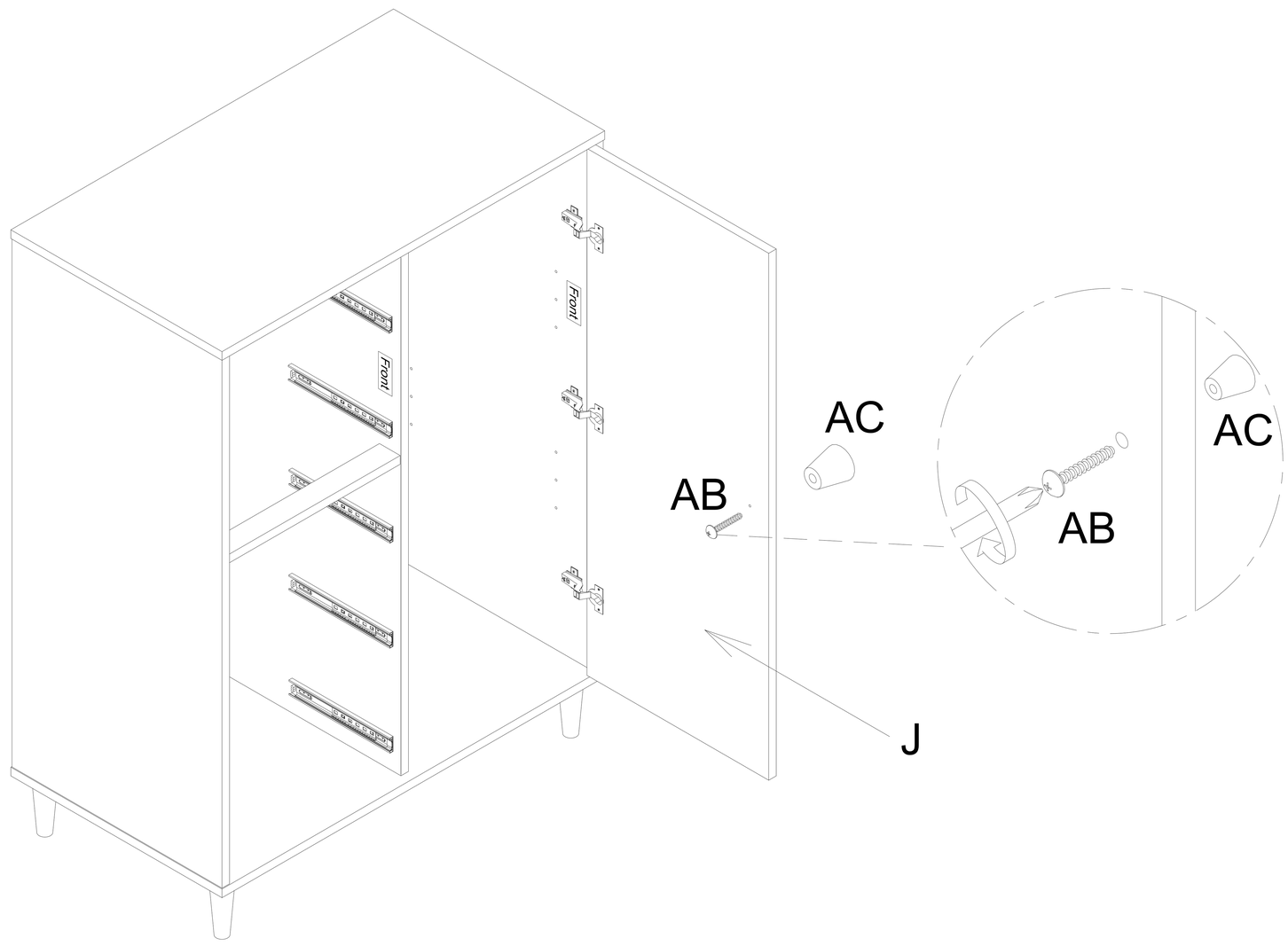

15 Attach Shelving Support (AA) to Right Side Panel (C) & Partition (E) at desired shelf heights. Slot in Shelving (K) into the assembled unit.

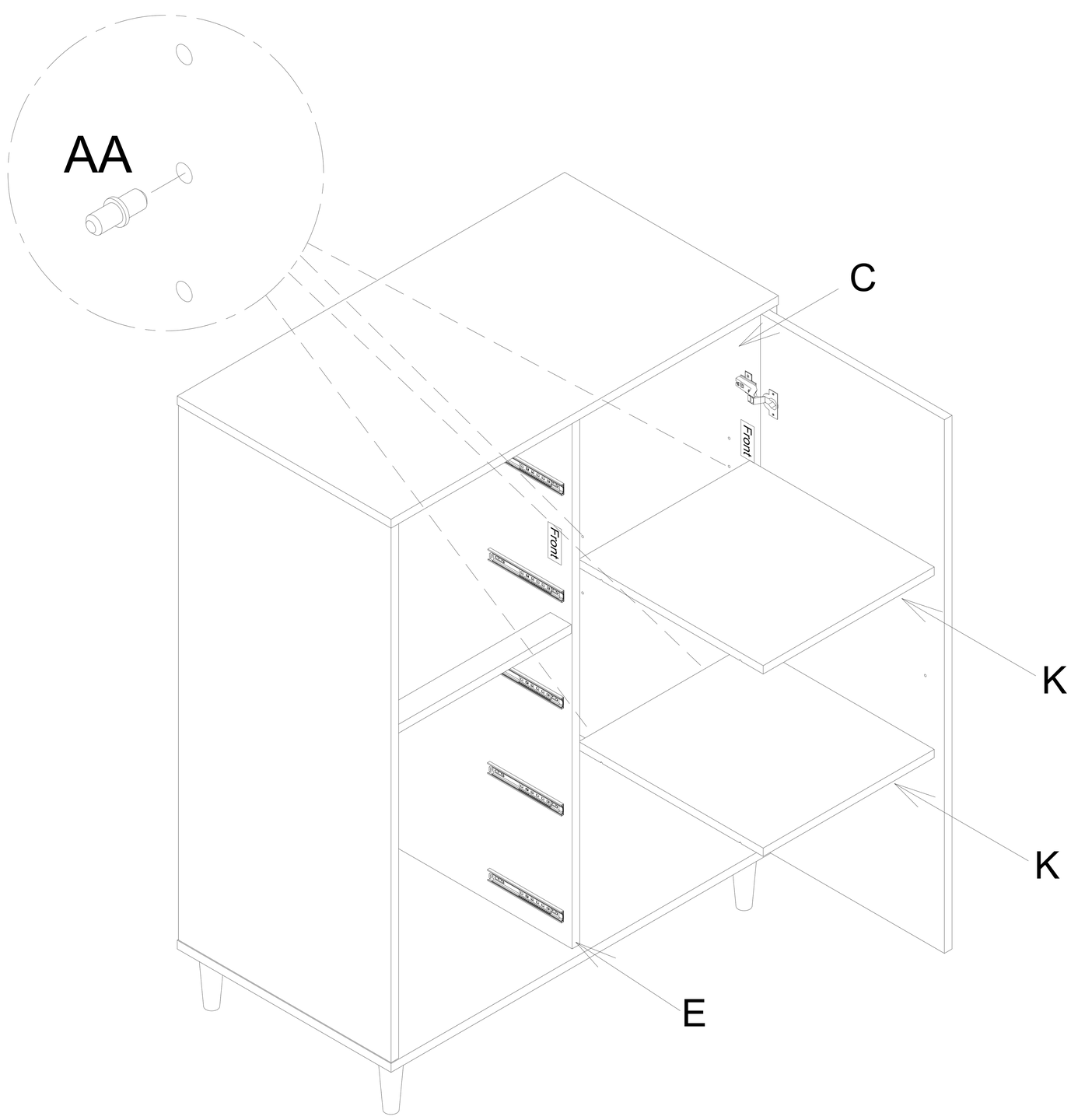

16 Attach Runner (W) to Left & Right Drawer Side (M & P) using Screw (Q) with screwdriver (not provided).

NOTE : - Do not over tighten the Screw (Q).

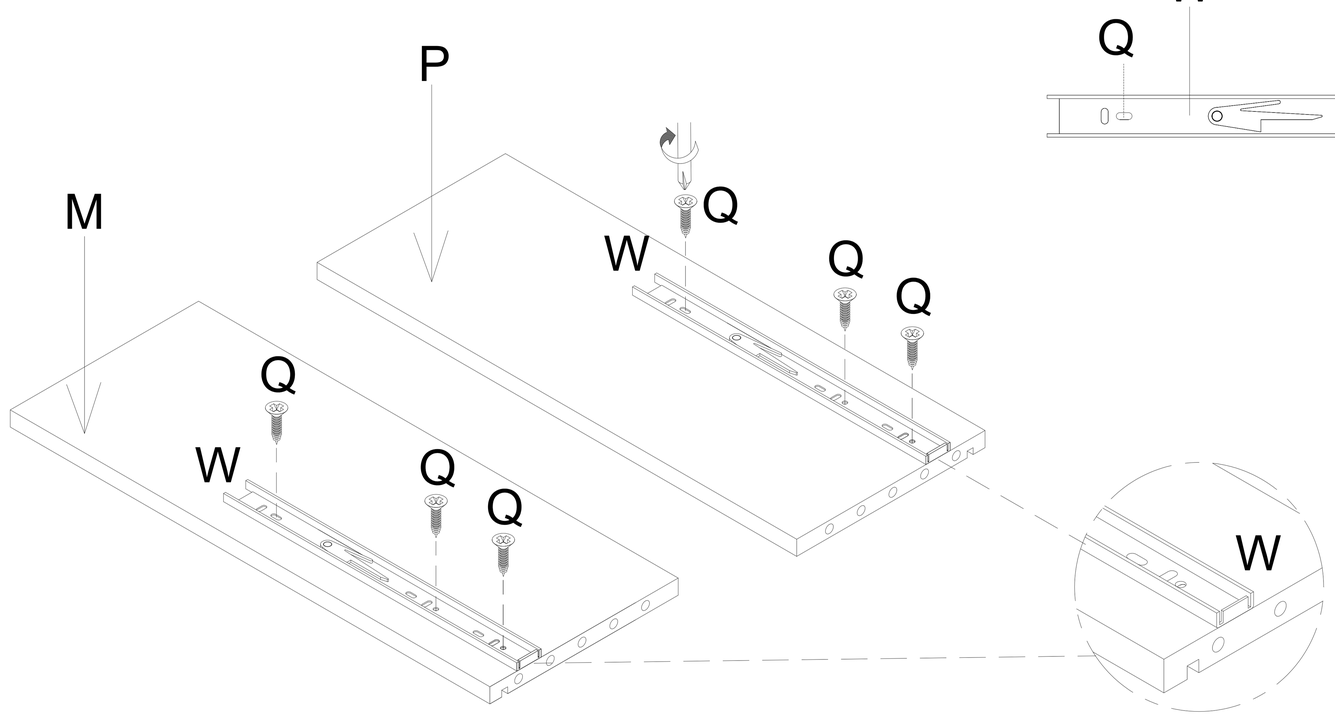

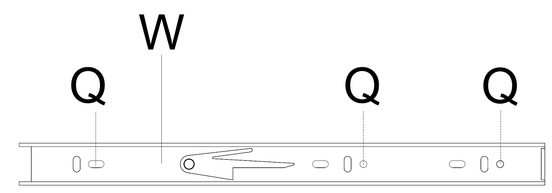

17 Flip over Left & Right Drawer Side (M & P). Attach Dowel (V) and Cam Lock (T) to Left & Right Drawer Side (M & P) and Drawer Back (N). Attach Cam Bolt (U) to Left & Right Drawer Side (M & P) and Drawer Front (L).

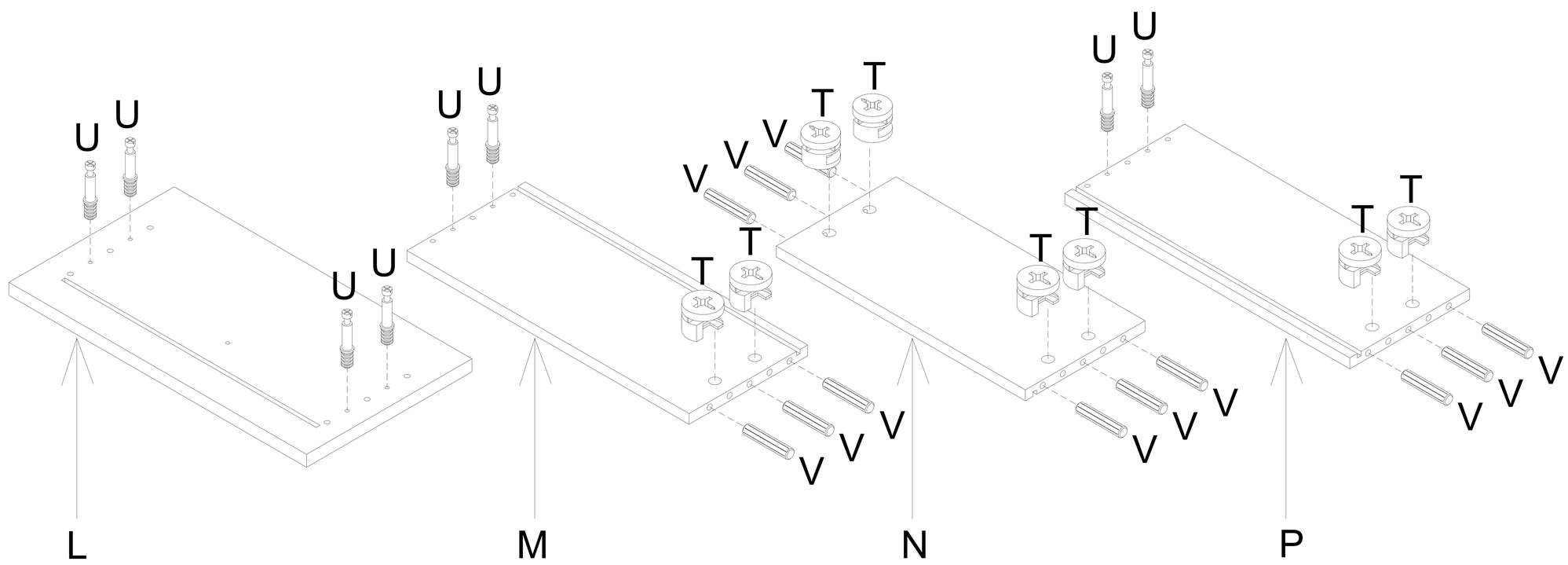

18 Attach Left & Right Drawer Side (M & P) to Drawer Back (N) and secure with Cam Lock (T) attached in the Step 17. Cover Cam Lock (T) with Cam Lock Cover (X).

NOTE : - Do not over tighten the Cam Lock (T).

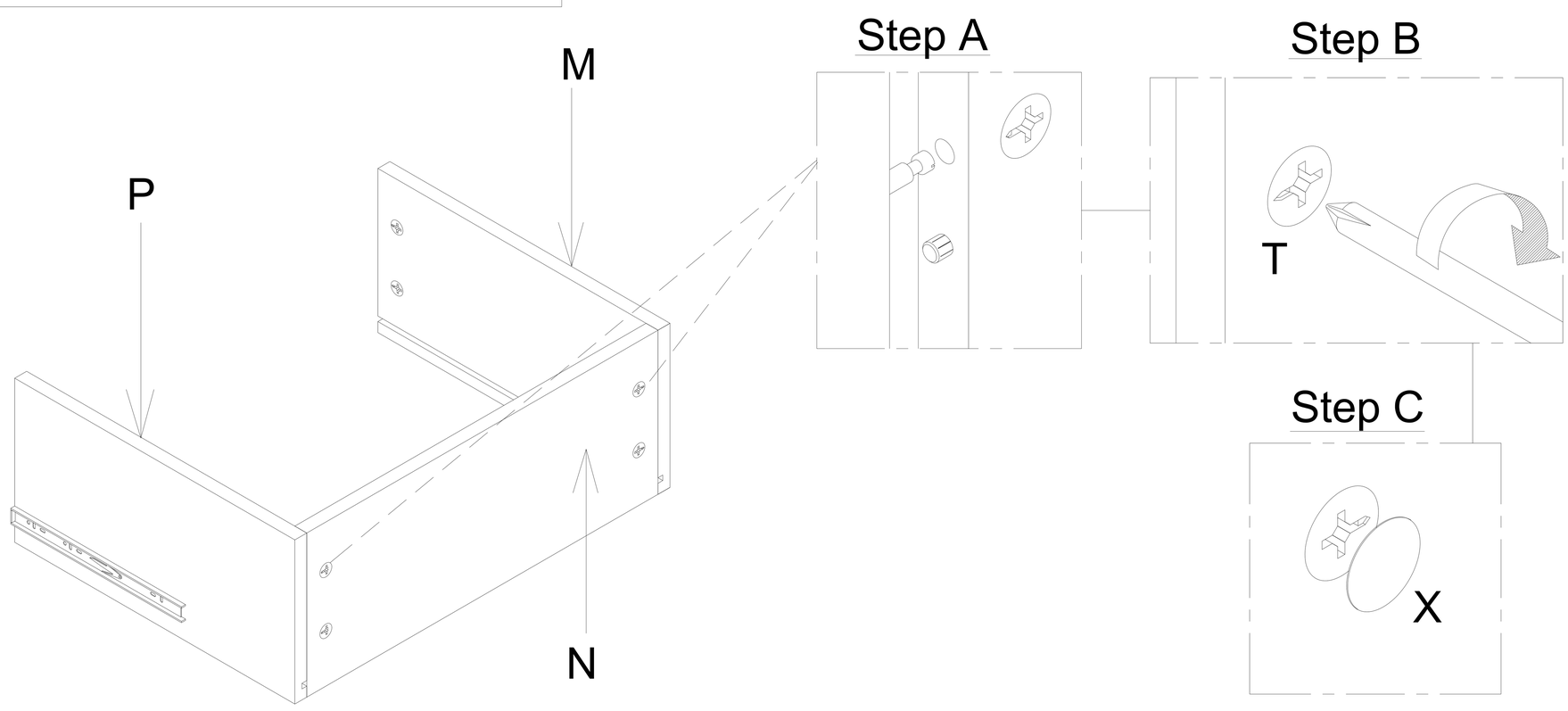

19 Slot in Drawer Base (K) in corresponding grooves. Attach Drawer Front (L) to Drawer Box and secure with Cam Lock (T). Cover Cam Lock (T) with Cam Lock Cover (X).

NOTE : - Do not over tighten the Cam Lock (T).

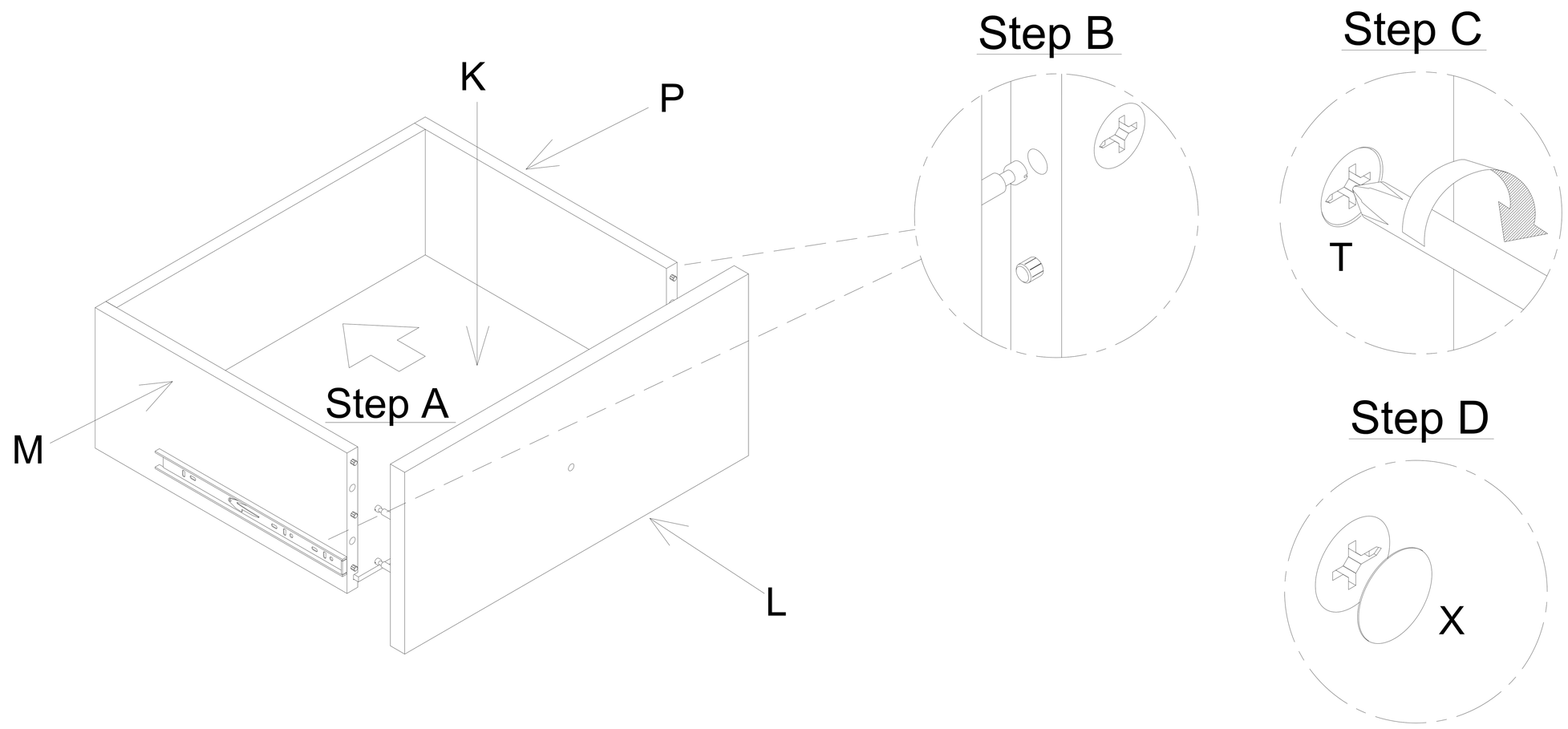

20 Attach Handle (AC) to Drawer Front (L) using Panhead Screw (AB) with screwdriver (not provided).

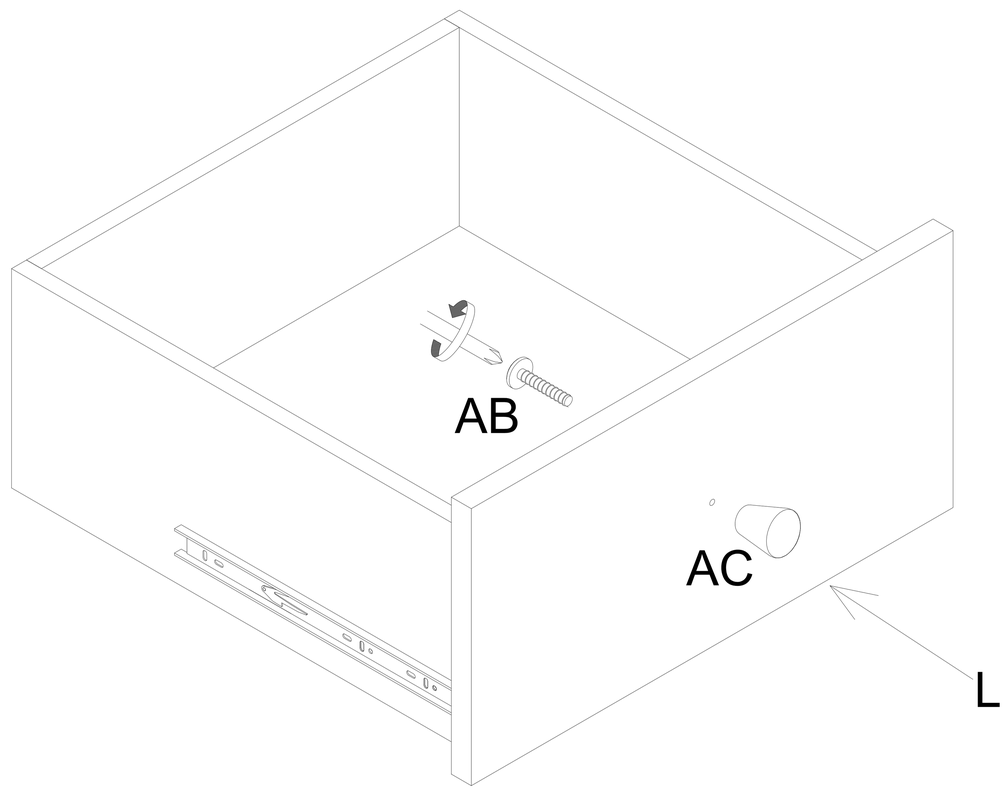

21 Slot Drawers into the assembled unit.

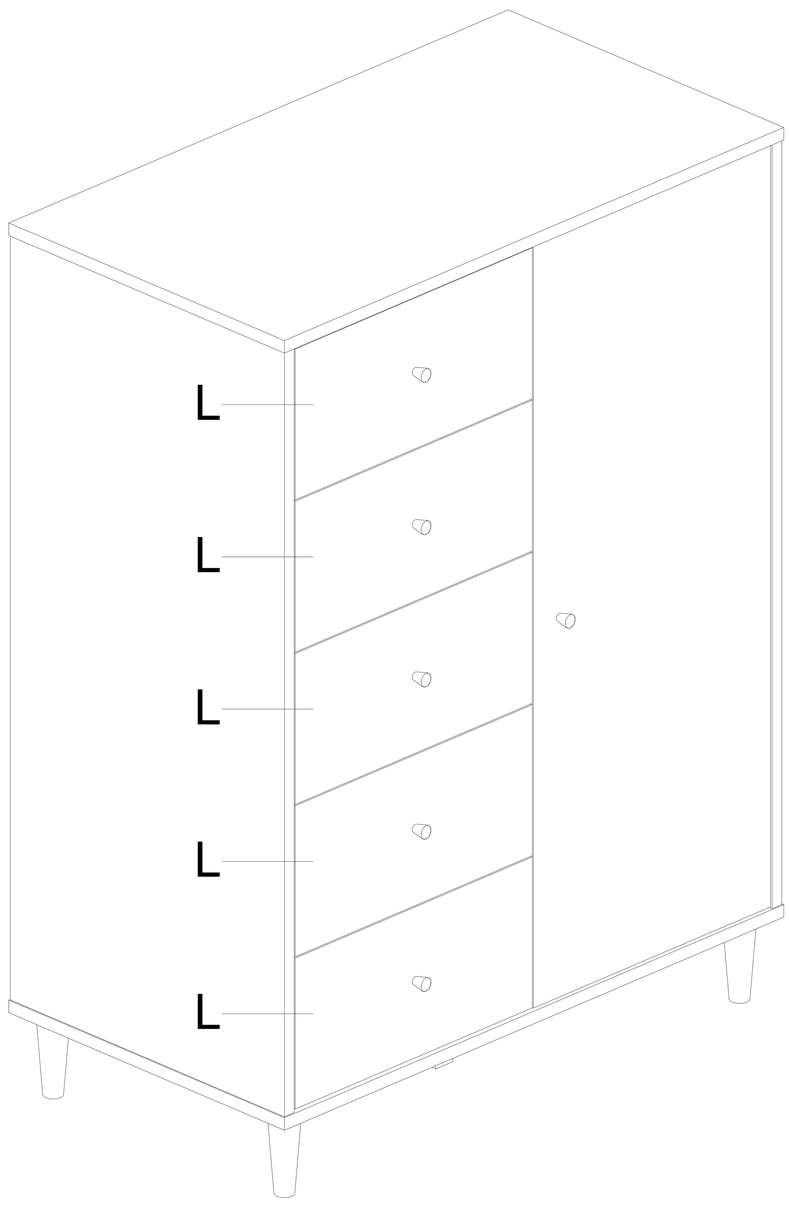

EXTENSION RUNNER ASSEMBLY STEP:

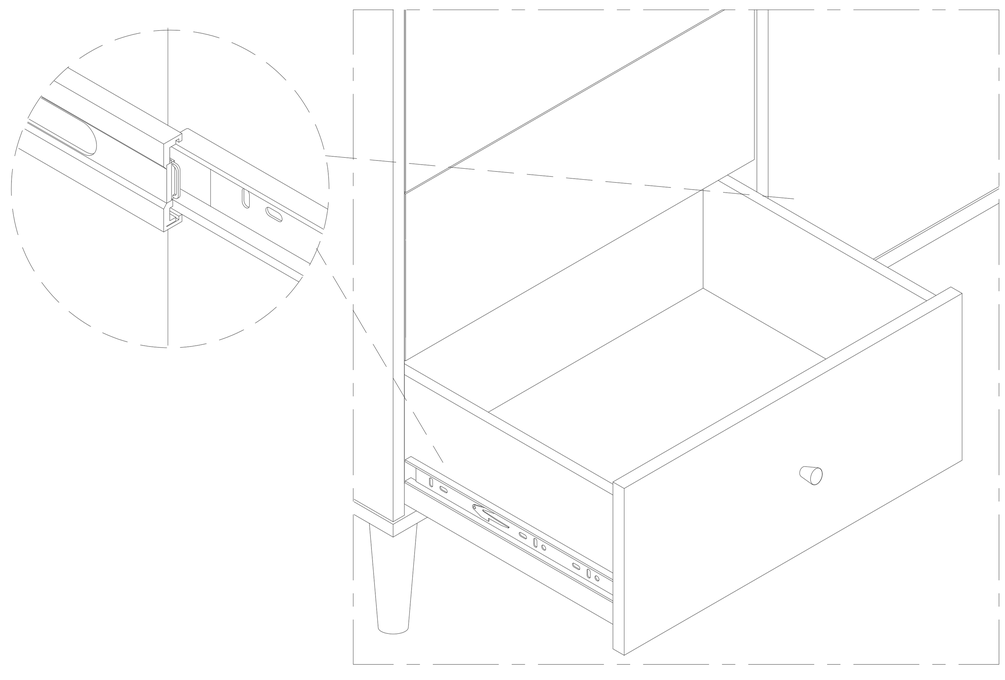

NOTE : Align and pull/push the triggers on both sides of drawer box into the metal track on interior side of side panel.

22 Attach Anti-Tipping Kit (AE) to wall. Attach Bracket (vertically) to wall using the Long Screw provided. Attach Bracket (vertically) to furniture back (directly below top) with Short Screw. Place Bracket as close to center of furniture back as possible in relation to wall stud and the desired position in the room. Move furniture to its final position. Thread the strap through Bracket, and pull it tight.

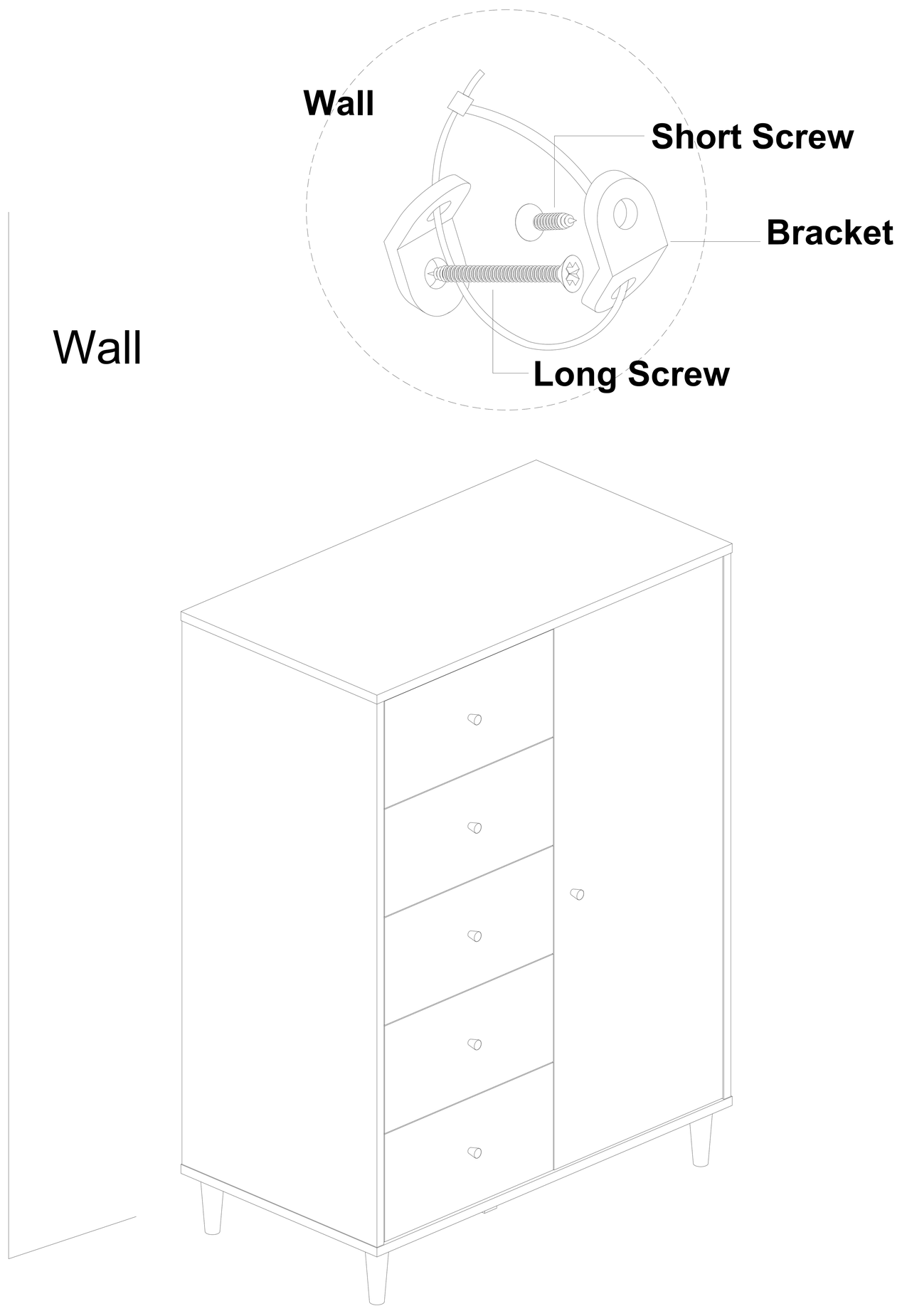

Cleaning & Care
Treat surface with care. Surface is resistant to scratches but is not scratch resistant. Clean surfaces with a dry or damp soft cloth. Do not use abrasive cleaners. Hardware may loosen over time. Periodically check that all connections are tight.