INSTALLATION INSTRUCTION

Volta 4.5" LED - Adjustable Round Trim

R4RAT, R4RAL

WAC LIGHTING
Responsible Lighting®

SAFETY INSTRUCTION

IMPORTANT: NEVER attempt any work without shutting off the electricity.

- Read all instructions before installing.
- System is intended for installation by a qualified electrician in accordance with the National Electrical Code and local regulations.
- Go to the main fuse box, or circuit breaker. Place the main power switch in the "OFF" position and unscrew the fuse(s) or switch "OFF" the circuit breaker switch(es) that control the power to the fixture or room that you are working on.
- Place the wall switch in the "OFF" position.

AVERTISSEMENT

IMPORTANT : Coupez l'électricité avant TOUTE manipulation.

- Lisez toutes les instructions avant d'installer.
- Système est destiné à être installé par un électricien qualifié en conformité avec le code national de l'électricité et les règlements locaux.
- Accédez au panneau central de disjoncteurs ou de fusibles de votre demeure et placez l'interrupteur principal en position d'arrêt (« OFF »).
- Placez l'interrupteur mural en position d'arrêt (« OFF »).

CAUTION

All parts must be used as indicated in these instructions. Do not substitute any parts, leave parts, or use any parts that are worn out or broken. Failure to follow could invalidate the ETL/cETL listing of this fixture.

TRIM MODEL

The trim R4RAT can be used with remodel and new construction round housings. The invisible trim R4RAL to be used with new construction round housing. Refer to specification sheets for compatible housing and trim details. Follow appropriate housing instructions to begin installation.

TRIM INSTALLATION (R4RAT)

Note: Before installation, make sure the trim assembly is in vertical straight position.

1. Remove trim from trim assembly (See **FIG.1**).
2. Raise trim assembly to ceiling cutout and connect power connector and safety cable (See **FIG.2**).
3. Install connector cap onto top of trim assembly, careful not to pinch power wiring. Also make sure the cap wire cable aligns with the notch on the top of heat-sink (See **FIG.3**).

FIG. 1

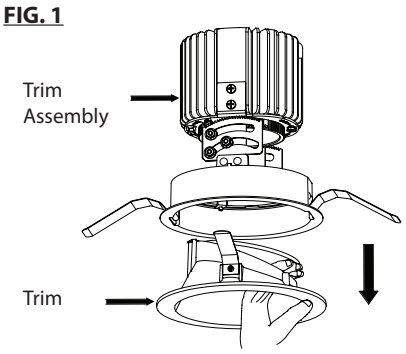

FIG. 2

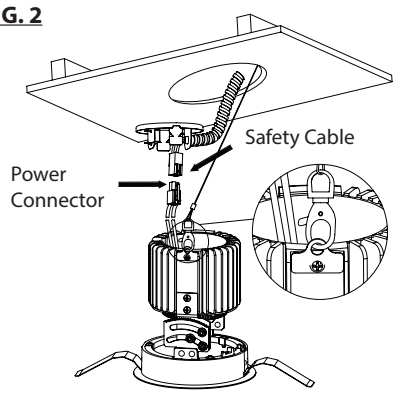

FIG. 3

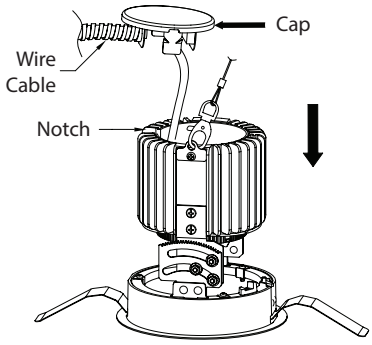

waclighting.com
Phone (800) 526.2588
Fax (800) 526.2585

Headquarters/Eastern Distribution Center
44 Harbor Park Drive
Port Washington, NY 11050

Central Distribution Center
1600 Distribution Ct
Lithia Springs, GA 30122

Western Distribution Center
1750 Archibald Avenue
Ontario, CA 91760

WAC Lighting retains the right to modify the design of our products at any time as part of the company's continuous improvement program. SEPTEMBER, 2016

4. Fold trim assembly mounting springs inward and insert trim assembly into ceiling cutout. Be sure once installed, trim assembly is flush and secure (See **FIG.4**).
5. Before insert trim inside the trim assembly, the trim assembly need to be adjusted to the desired position horizontally and vertically. See the following section of optional adjustment features for the details.
6. After finishing the adjustment, raise trim up to the trim assembly until the trim is flush with ceiling surface. Be sure trim springs go into appropriate slots in the trim assembly (See **FIG.5 & 6**).

FIG. 4

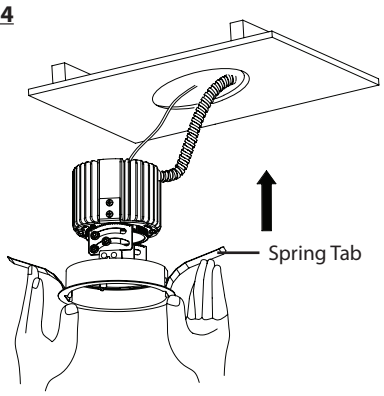

FIG. 5

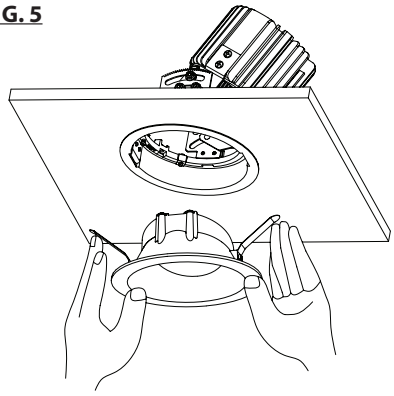

FIG. 6

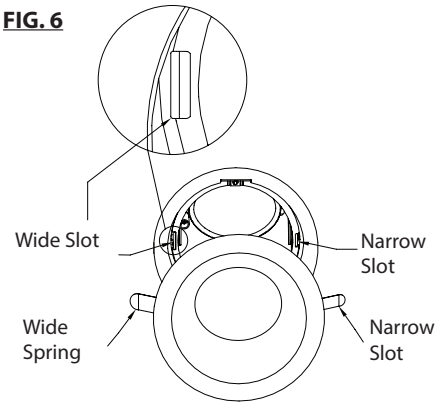

INVISIBLE TRIM INSTALLATION (R4RAL)
Note: Before installation, make sure the trim assembly is in vertical straight position.

1. Remove trim from trim assembly (See **FIG.7**).
2. Raise trim assembly to ceiling cutout and connect power connector and safety cable (See **FIG.8**).
3. Install connector cap onto top of trim assembly, careful not to pinch power wiring. Make sure the cap wire cable aligns with the notch on the top of heat-sink (See **FIG.9**).
4. After power and safety chain connections, insert trim assembly into spackle frame (See **FIG.10**).

FIG. 7

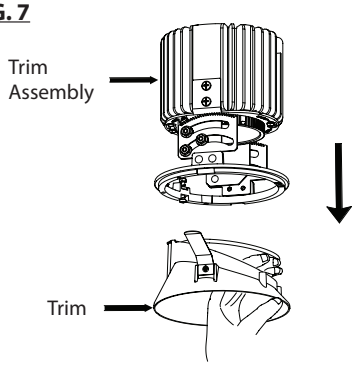

FIG. 8

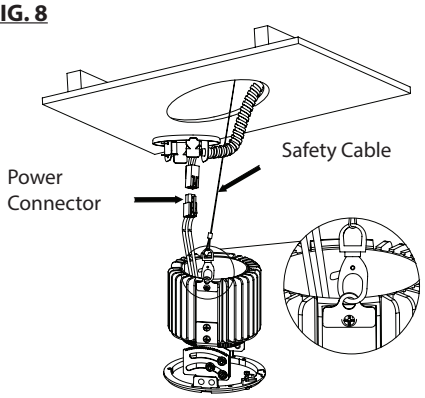

FIG. 9

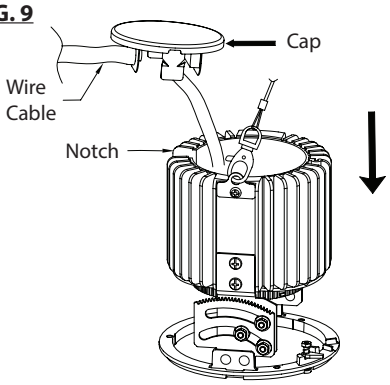

FIG. 10

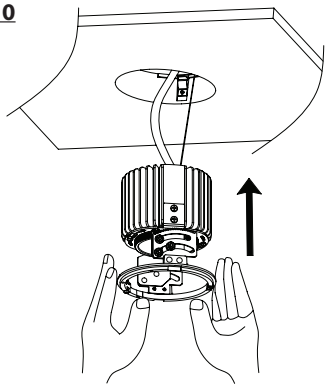

5. Before insert trim inside the trim assembly, the trim assembly need to be adjusted to the desired position horizontally and vertically. See the following section of optional adjustment features for the details.
6. After finishing the adjustment, raise trim up to the trim assembly until the trim is flush with ceiling surface. Be sure trim springs go into appropriate slots in the trim assembly (See **FIG.11 & 12**).

FIG. 11

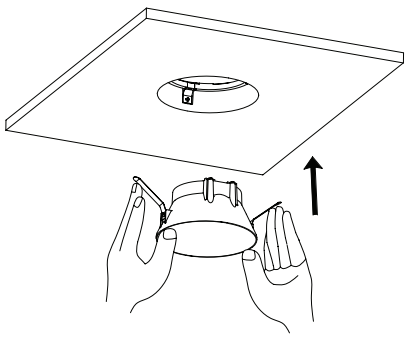

FIG. 12

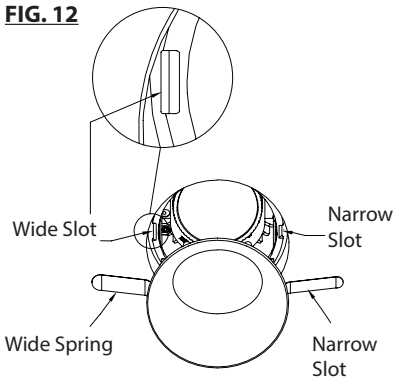

OPTIONAL ADJUSTMENT FEATURES

The adjustable trims can be adjusted to aim the light beam to accent objects, walls, etc. This action to be done before the trim is installed.

1. Horizontal (Rotational) Adjustment

The trim assembly is capable of being horizontally rotated up to 365 degrees, and can be locked in place once the adjustment is done.

a. Use the Philips-head screw driver to loose the locking screw by turning anti-clockwise in order to rotate the trim assembly freely to aim the beam of light horizontally (See **FIG.13**).
b. After adjusting the trim assembly to the desired position, lock it in-place by turning the locking screw clockwise to the end.

FIG. 13

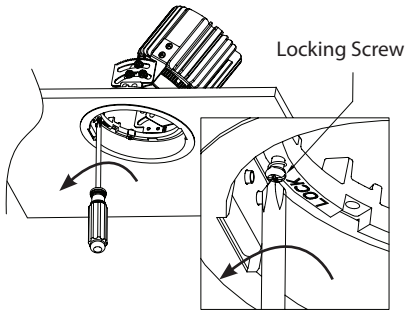

2. Vertical (Angular) Adjustment

The trim assembly is capable of being vertically adjusted between 0-45 degrees, and can self-lock in place once the adjustment is done.

a. Insert the Philips-head screw driver into the guide channel.
b. Gently push up screw driver to release spring latch. While holding latch up, tilt screw driver handle until the desired angle is achieved. The angle indicator is marked with lines in 5° increments to assist with positioning (See **FIG.14**).

Note:
The adjustable trims have the Hot-Aiming feature for both horizontal rotation and vertical adjusting.

FIG. 14

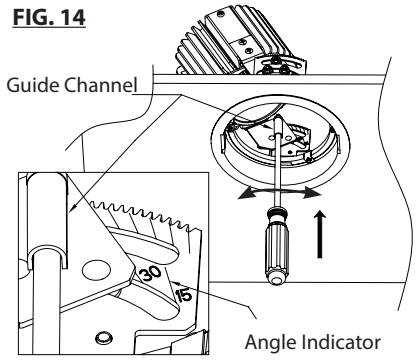

ACCESSORY INSTALLATION

1. Power off fixture and let fixture cool down.
2. Remove trim from trim assembly (See **FIG.15**).
3. Adjust the trim assembly to the vertical straight position.
4. Prepare accessory holder with appropriate accessory (See **FIG.16**).
5. Raise the accessory assembly up into the trim opening, engage the accessory holder at white tabs of optical cartridge and turn clockwise to lock (See **FIG.17**).
6. Put back the trim assembly to the desired position.
7. Reinstall trim up to trim assembly until trim is flash with ceiling surface. Be sure trim springs mount in appropriate slots in assembly (See **FIG.5 & 6**).

REFLECTOR AND LED REPLACEMENT

1. Power off fixture and let fixture cool down.

2. Exchange reflector
   Note: Not for spot distribution which features dedicated module
   a. Remove the trim from the trim assembly (See **FIG.15)**.
   b. Adjust the trim assembly to the vertical straight position.
   c. Inset hand into fixture opening to grip optical cartridge, rotate to unlock and take out (See FIG.18).
   d. Insert the replacement reflector into optical cartridge, put the whole assembly back inside fixture and lock it to the heat sink.
   e. Put back the trim assembly to the original position, then reinstall the trim inside fixture to complete (See **FIG. 5 & 6**).

3. Replace the LED module (For Narrow & Flood Beams)
   a. Remove trim from the trim assembly first, then adjust the trim assembly to the vertical straight position and take out the trim assembly from the ceiling or fixture aperture (See **FIG.19**).
   b. To remove the invisible trim assembly, use the Philips head screw driver to loose the locking screw and the flat head screw driver to release the spring tab on aperture ring (See **FIG.20)**.

FIG. 15

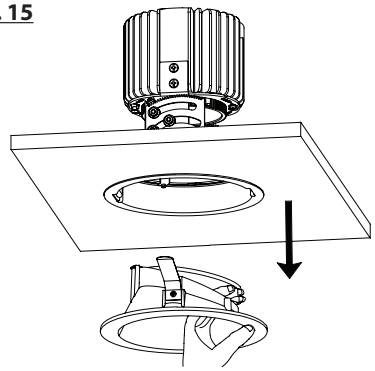

FIG. 16

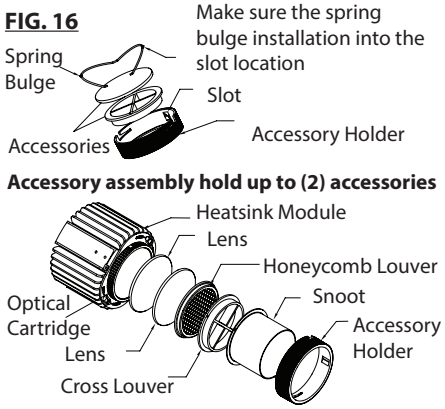

FIG. 17

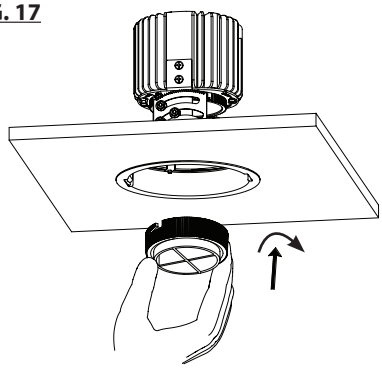

FIG. 18

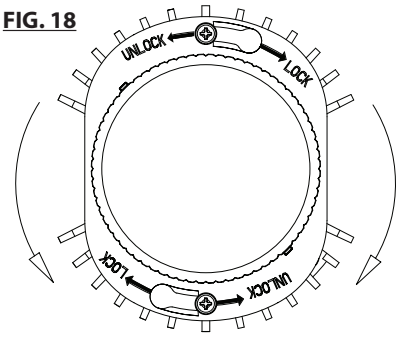

Rotate Anticlockwise to Unlock

Rotate Clockwise to Lock

FIG. 19

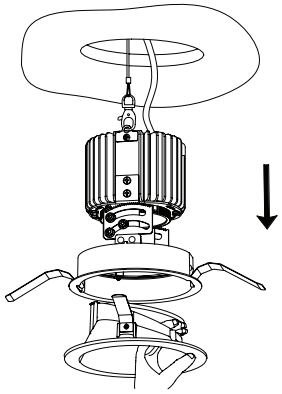

FIG. 20

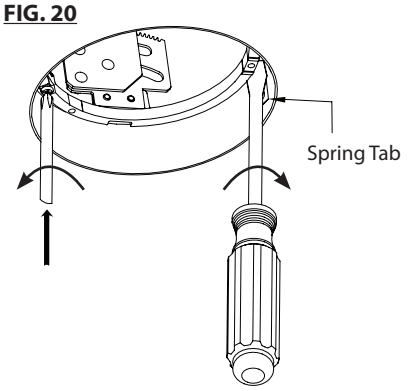

c. Remove cap and disconnect power connector and safety cable (See **FIG.21**).
d. Unlock and remove the optical cartridge and reflector (See **FIG.18**).
e. Unscrew the LED holder and remove the LED connector from the LED module (See **FIG.22, 23**).
f. Remove and discard the LED module from the heat sink.
g. Coat the heat paste (by others or call the factory) on the back of the new LED module and place it on the heat sink by aligning two holes on LED with two screw holes on the heat sink.
h. Connect the LED module with connector and fasten the LED holder on top of the LED model by tightening two screws.
i. Reinstall the reflector and optical cartridge (See **FIG.18**)
j. Connect power connector and safety cable, then reinstall the trim assembly and trim inside fixture to complete.

FIG. 21

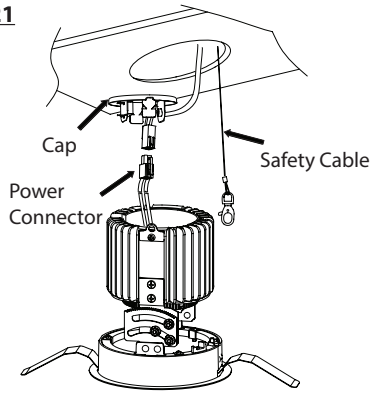

FIG. 22

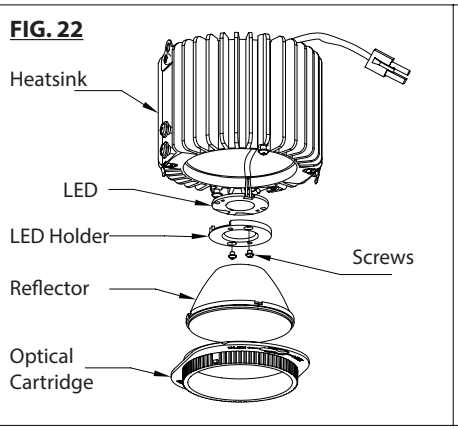

FIG. 23

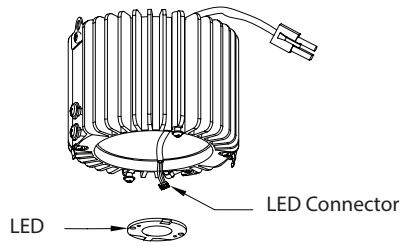

4. Replace the LED module (For Spot Beam)
   a. Remove trim from the trim assembly first, then the trim assembly from the ceiling or fixture aperture (See **FIG.19**).
   b. To remove the invisible trim assembly, use the Philips-Head screw driver to unlock the locking screw, then use the flat head screw driver to release the spring tab on aperture ring (See **FIG.20**).
   c. Remove cap and disconnect power connector and safety cable (See **FIG.21**).
   d. Unlock and remove the optical cartridge and lens (See **FIG.18**).
   e. Unscrew and remove the LED holder (See **FIG.24**).
   f. Remove and discard the LED module from the heat sink.
   g. Coat the heat paste (by others or call the factory) on the back of the new LED module, then mount the LED onto the LED holder. Make sure the LED positive matching the holder positive (See **FIG.25**).
   h. Place back the LED holder on the heat sink by tightening two screws.
   i. Lock the optical cartridge on the heat sink.
   j. Connect power connector and safety cable, then reinstall the trim assembly and trim inside fixture to complete.

FIG. 24

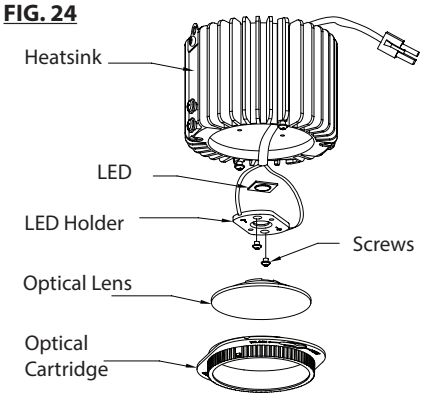
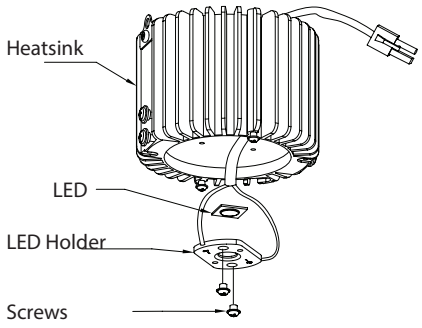
FIG. 25