ZEAFiVE®

DIMENSION DETAILS

BATHROOM VANITY TOP

Email: service@bestgosupplychaininc.com

MODEL.

FX42-BY3K8-L

SCAN ME

PRODUCT INSTRUCTION VIDEO



TOP VIEW

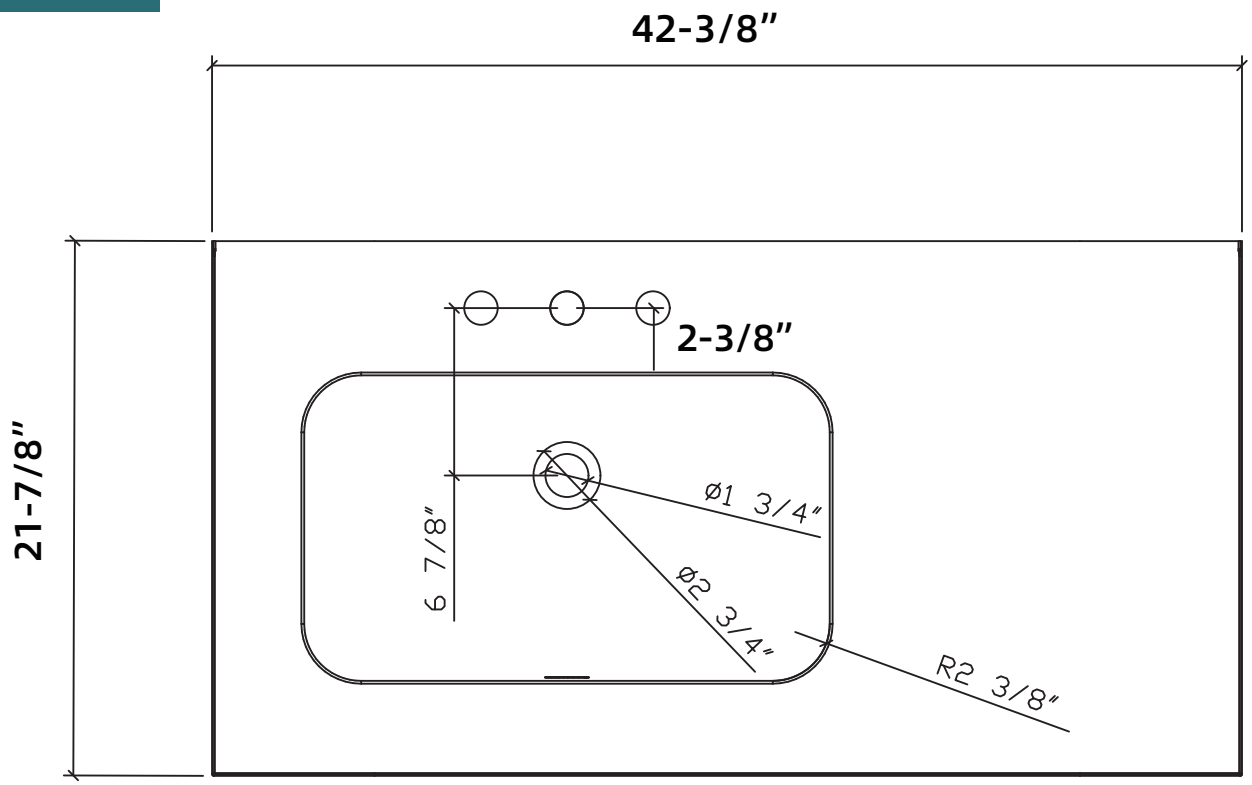

FRONT VIEW

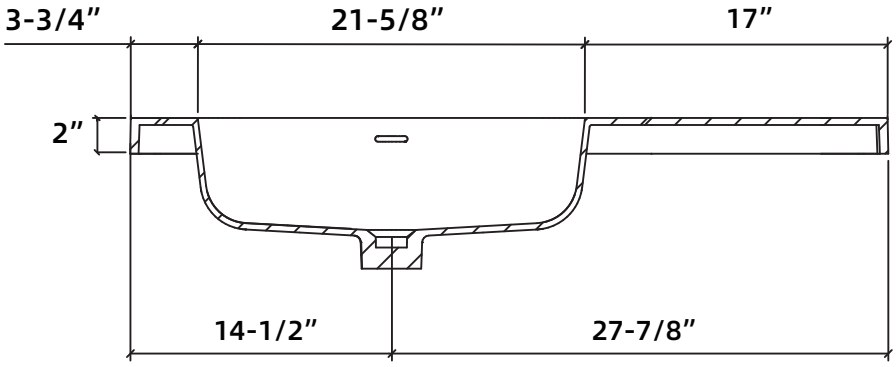

SIDE VIEW

