Product Specs Sheets

Cover Page

WS 17 Touch

Features

- Magnifying Makeup Mirror
- Polished Chrome Finish
- Solid Brass Base
- Magnification 5X
- With Touch Dimmer: Light Color Infinitely Adjustable
- Hard Wired (Direct Power Supply)
- Light Color Range: 2900K - 6000K
- Double Arm, Extendable, Swiveling
- Free of Distortion

SKU# | Option:

- WS 17 Touch | Polished Chrome

Finishes:

Polished Chrome

*** WS Bath Collections reserves the right to revise dimensions or information on this sheet without notice**

Collection	Model |	Dimensions Metric	
Spiegel	WS 17 Touch	*1 inch = 2.54 cm* *1 inch = 25.4 mm*	WS® BATH COLLECTIONS 1051 Lea Drive - Collegeville, PA 19426 Tel. 215 513 9400 - Fax 610 831 0215 www.wsbathcollections.com - info@wsbathcollections.com

Product Specs Sheets

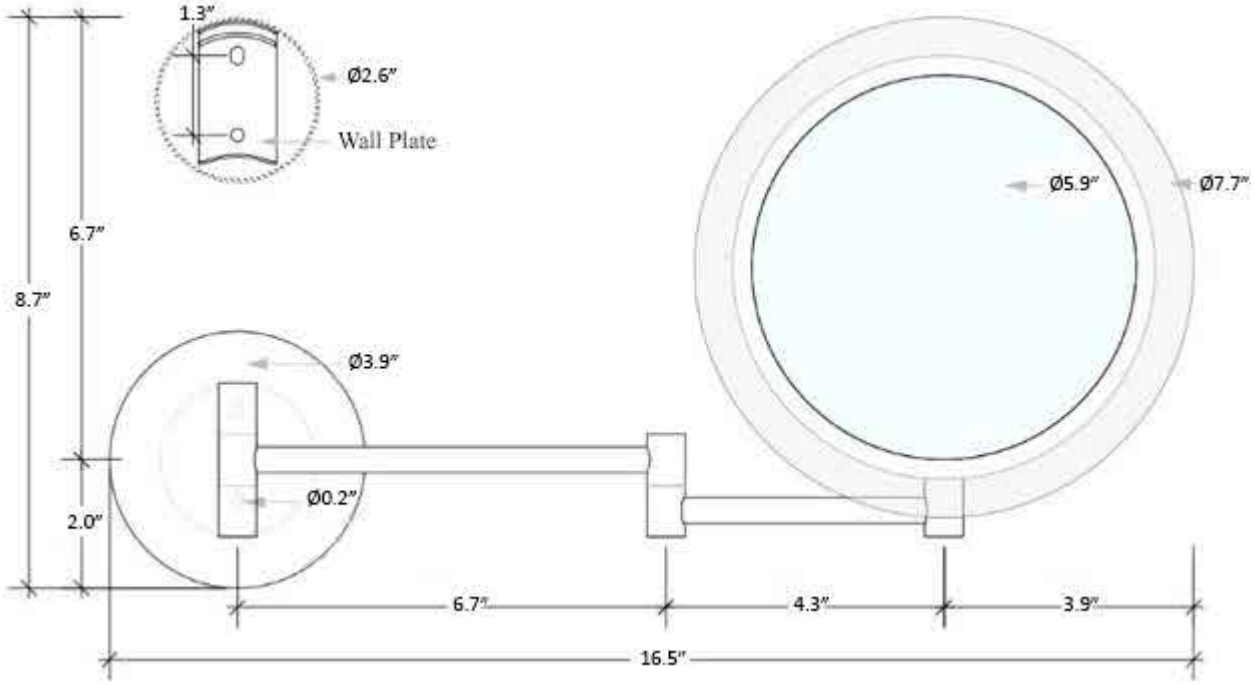

Collection	Model |	Dimensions Metric	
Spiegel	WS 17 Touch	*1 inch = 2.54 cm* *1 inch = 25.4 mm*	WS® BATH COLLECTIONS 1051 Lea Drive - Collegeville, PA 19426 Tel. 215 513 9400 - Fax 610 831 0215 www.wsbathcollections.com - info@wsbathcollections.com