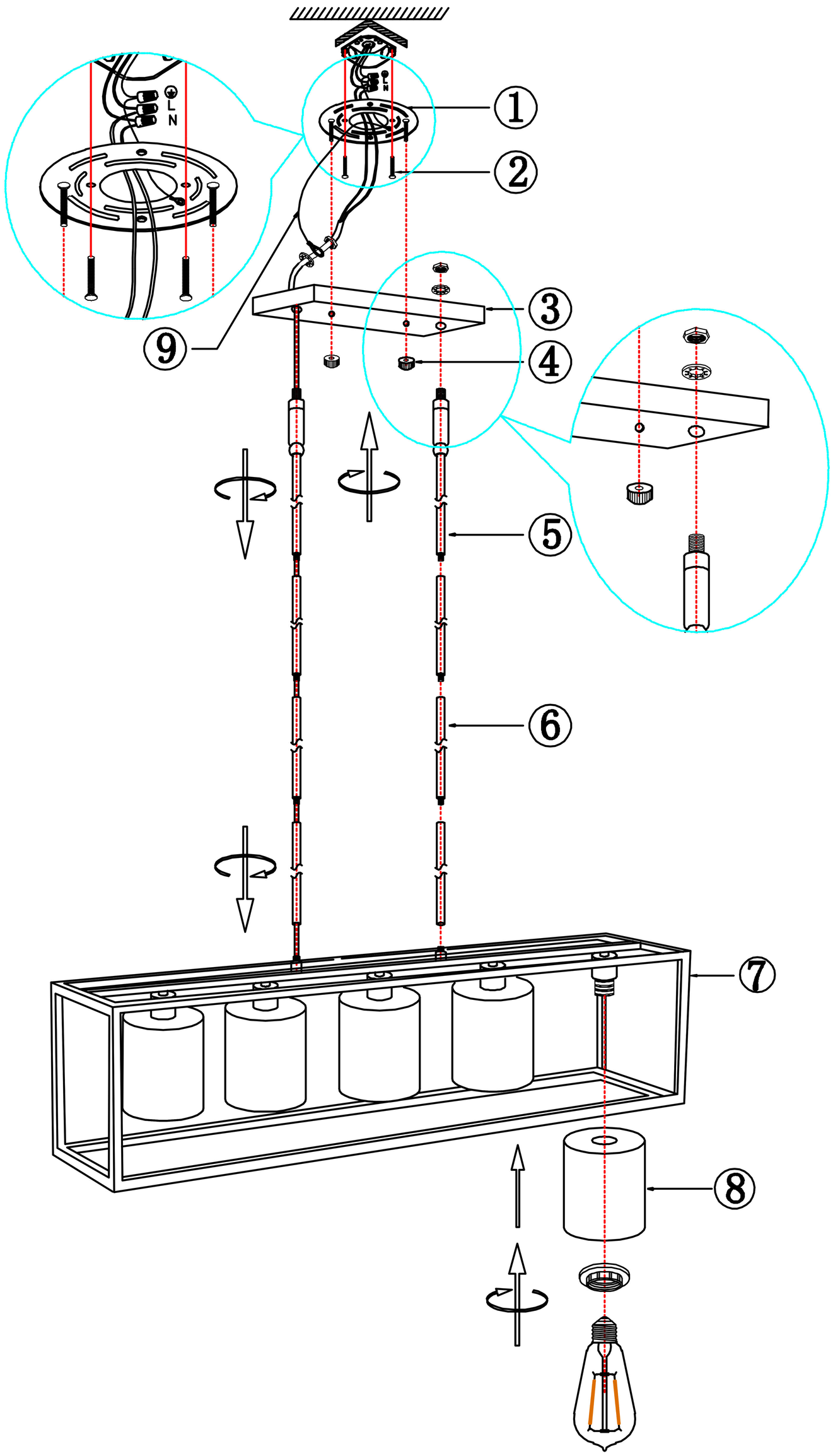

Installation Steps:

Step 1: Lock the connecting rods (6) on the lamp body (7), and then lock the remaining connecting rod (6) in turn.
Step 2: Lock the connection rod + universal joint (5) on the connection rod (6).
Step 3: Use the nut on the connecting rod + universal joint (5) and the gasket to lock the ground wire (9) and the canopy (3) on the connecting rod + universal joint (5).
Step 4: Fix the mounting plate (1) to the ceiling with screws (2).
Step 5: Connect the positive terminal L and negative terminal N of the main line and power cable separately with the P3 wiring cap of the fittings (10), and the ground wire(9).
Step 6: Fix the canopy (3) on the mounting plate (1) with a nut (4).
Step 7: Fix the glass shade (8) to the lamp holder with the lamp holder ring.
Step 8: Install light bulbs(without light bulbs).

Accessories:

1:Mounting Plate*1	
2:Screws*3	
3:Canopy*1	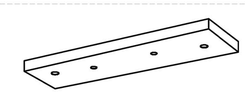
4:Nut*2	
5:Rod+Universal joint*2	
6:Rod*10	
7:Lamp Body*1	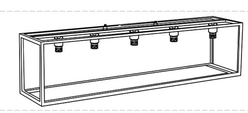
8:Glass Shade*5	
9:Ground Wire*1	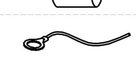
10:Fittings*1	
11:Wrench*1	

Notice: This light fixture should be installed in accordance with all applicable, local installation codes, and by a person familiar with the construction and operation of it, as well as the hazards involved. Inspect items and contents carefully. If any damage or defect is found, do not install it.