ASSEMBLY INSTRUCTION

Ottoman

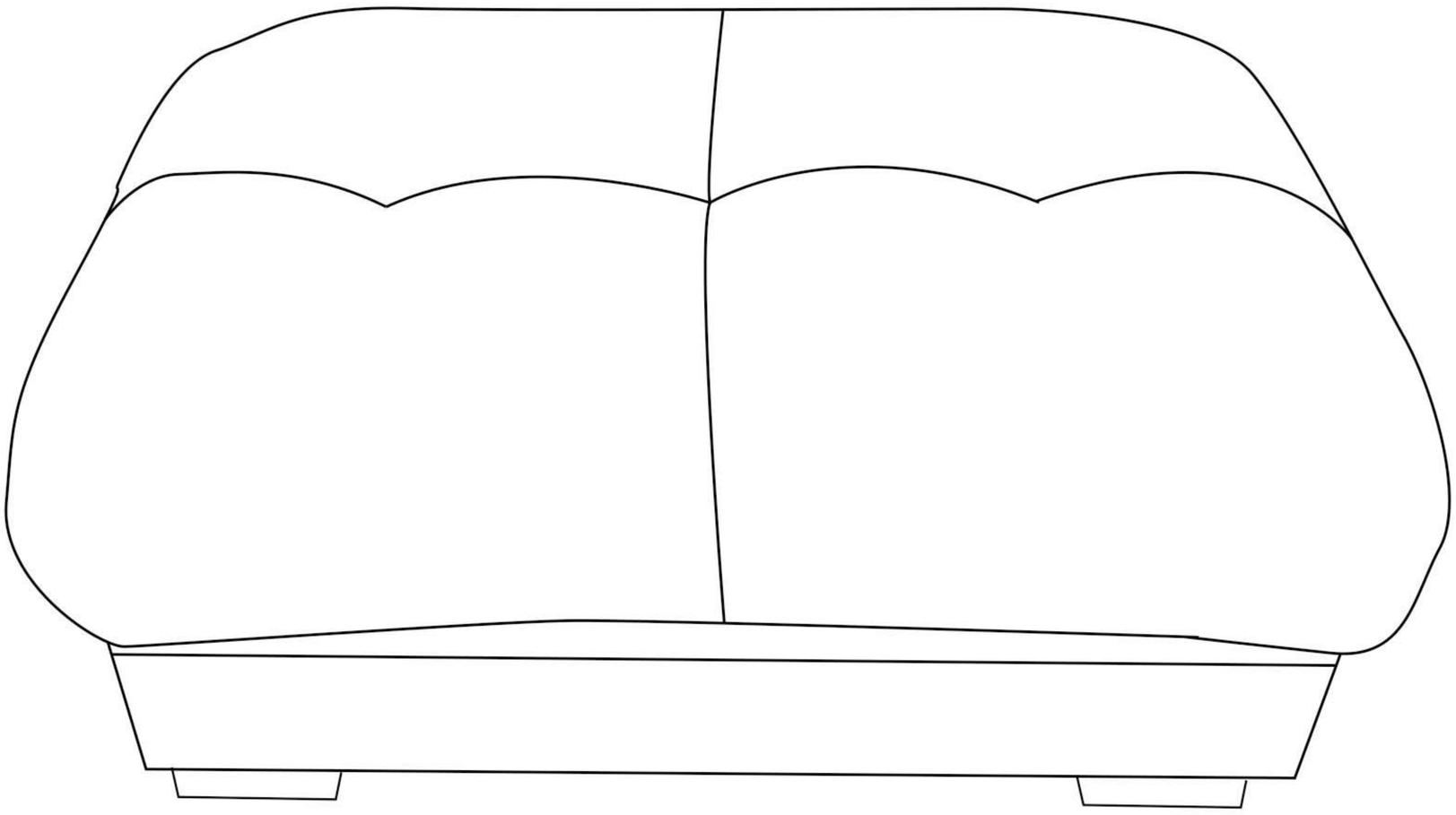

Thank you for choosing our product.
To ensure safe and satisfactory use of this product,please carefully read the below instructions before hand.
1.This sofa ships in several boxes,we recommend unpacking and starting assembly when several boxes are received.
2.Our cushions are vacuum packed for convenient shipping. Please allow 2-3 days for them to fully expand to their original shape and for any wrinkles to disappear.
3.In the event that a part is damaged or missing,no need to return the product,we will gladly help and ship your replacement parts free of charge.

Assembly Instructions

OTTOMAN

Parts List

A 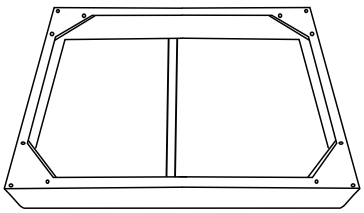 Seat frame*1	B 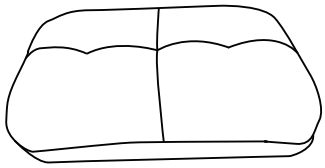 Seat cushion*1	
C 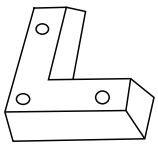 Leg*4	D 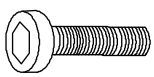 Bolt*12 M6*50mm	E  Allen key*1

Note: Please retain all boxes until you are certain that your product isn't damaged and that you do not wish to return it. Disposal of boxes may prevent our ability to resolve your request.

STEP 1

① Assemble the leg (C) to the seat frame (A) with Bolts (D).

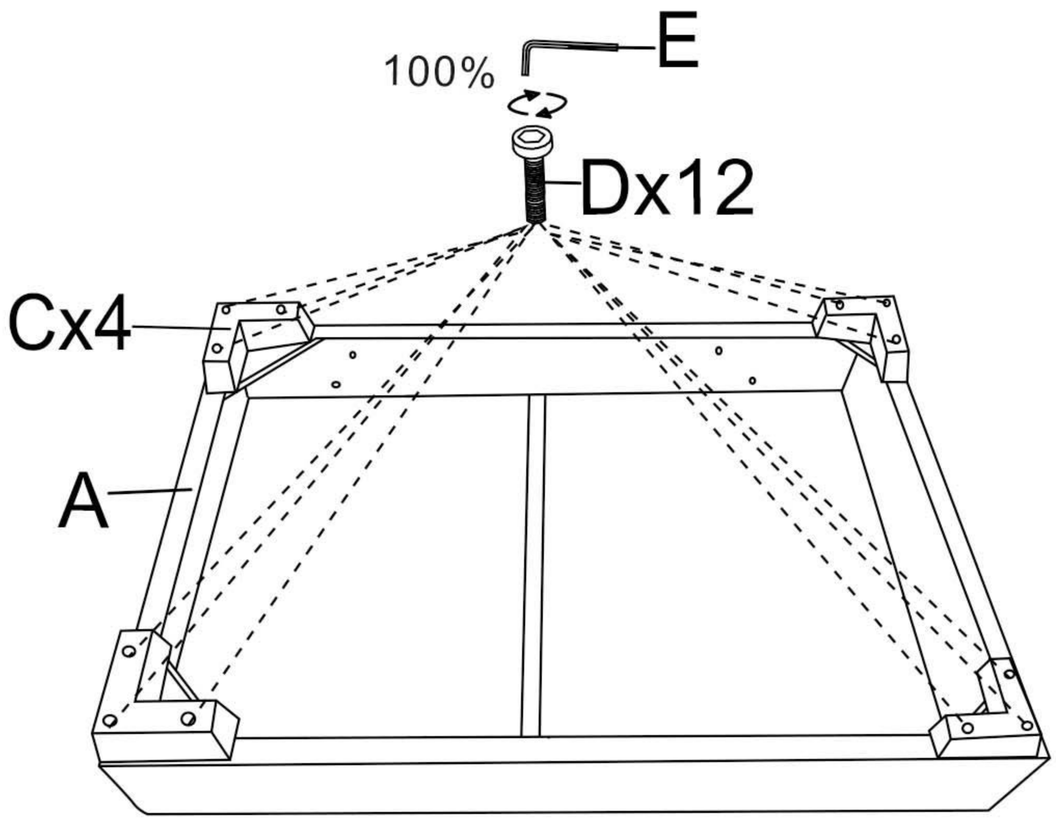

② Put seat cushion(B) to the sofa.

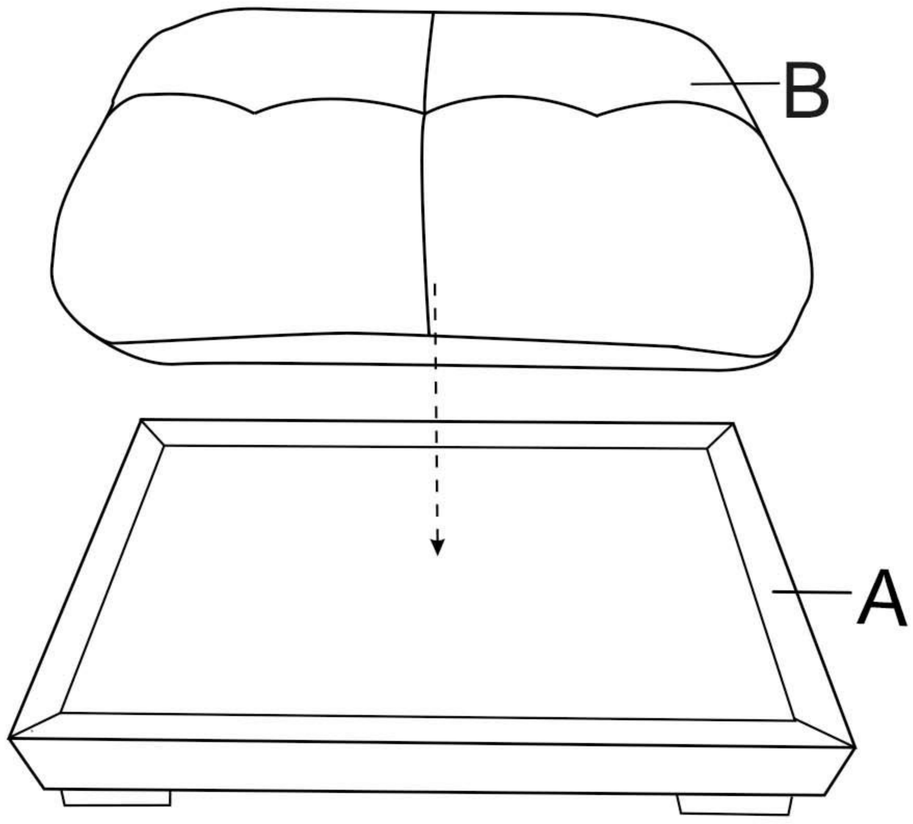

③ Completed.

