# Nightstand

Assembly Instruction – Please keep properly for future reference.

If you find any missing boxes, damaged parts, or accessory shortages, please contact the customer service team of your purchasing channel immediately. We will resolve the issue as quickly as possible.

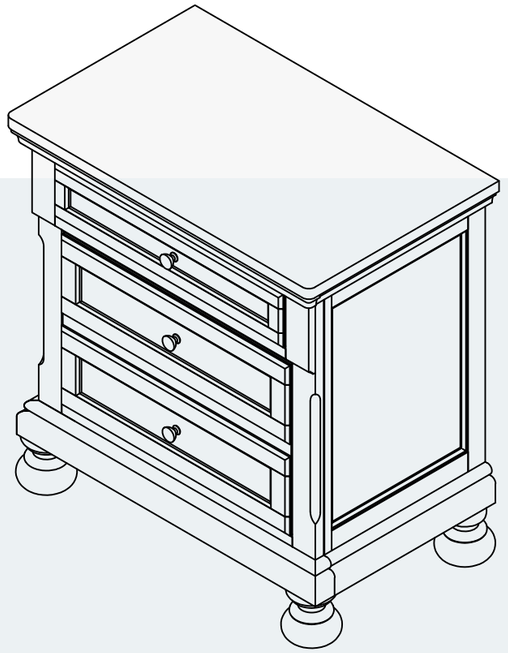

BD28R1-1B6A0
BD28R1-1B6B0

V1.0

EN

## CONTACT US

- **Email: service@grandtunnel.com**
  In order to receive assistance more quickly, please provide

## THE FOLLOWING INFORMATION:

- Order number
- Purchase platform
- Purchase date
- Detailed description of the issue along with photos (if applicable)

**Important –** Please read these instructions carefully before starting the installation.

Nightstand

# Before Assembly

Thank you for choosing our product!
To ensure a smooth installation process, please read this guide carefully to familiarize yourself with the required tools, materials, and installation steps. Follow the relevant sections to avoid any damage caused by improper installation, and make sure to review all operation and safety guidelines for correct installation procedures.

## Packaging Notice:

If you find any missing boxes, damaged parts, or accessory shortages, please contact the customer service team of your purchasing channel immediately. We will resolve the issue as quickly as possible.

# Safety and Care Advice

**Important :**
Please read these instructions fully before starting assembly.

- Check you have all the components and tools listed on the following pages.
- Remove all fittings from the plastic bags and separate them into their groups.
- Keep children and animals away from the work area, small parts could choke if swallowed.
- Make sure you have enough space to layout the parts before starting.
- During assembly do not stand or put weight on the product, this could cause damage.
- Assemble the item as close to its final position (in the same room) as possible.
- Assemble on a soft level surface to avoid damaging the unit or your floor.
- Parts of the assembly will be easier with 2 people.



- To reduce the likelihood of damaging your product please ensure that your power drill is set on a low torque setting.



Email : **service@grandtunnel.com**

EN

## Care and maintenance

- Only clean using a damp cloth and mild detergent, do not use bleach or abrasive cleaners.
- From time to time check that there are no loose screws on this unit.
- This product should not be discarded with household waste. Take to your local authority waste disposal center.

## Handy Hints

- Assemble all parts and bolts loosely during assembly, only once the product is complete should you fully tighten the bolts.
- Regularly check and ensure that all bolts and fittings are tightened properly.

## Warning

**In order to help prevent overturning, please follow these instructions.**

- Use the anti tip strap or wall fixing method provided (if applicable).
- Do not allow children to climb or hang on the furniture.
- Do not open more than one drawer at a time.
- Do not place heavy items in the top drawers.
- Do not place heavy items on top of the furniture, unless the furniture has been designed for this purpose.
- Please note that only the anti tip strap is provided. You will need to provide wall plugs and screws applicable for your wall type.

Email : **service@grandtunnel.com**

# Customer Service Guide

Thank you for choosing our product! We are committed to providing you with excellent service. If you find any missing parts, damaged packaging, or product damage after receiving all packages, please follow the steps below to quickly contact our customer service team. We will do our best to resolve your issue.

## 1. Missing Parts

### Verify Parts:

1. Refer to the “Parts List” in the manual to verify the name, specifications, and quantity of the missing parts.
2. Take a clear photo of the parts list and mark the missing parts with detailed information, e.g., “Missing 5 pieces of M6×30mm screws.”

### Contact Us:

**By Email:**

Send an email to **service@grandtunnel.com**, with the subject line “Missing Parts Issue.” Include the following in the email:

- A description of the missing parts and a photo of the parts list.
- Order details (order number, purchase platform, purchase date).

## 2. Product or Packaging Damage

### If it affects normal use:

**Steps:**

1. Take clear photos or videos showing the damaged parts and the extent of the damage (multi-angle shots are recommended).
2. Email the photos/videos along with order details to **service@grandtunnel.com**, with the subject line “Product Damage Issue.”

**Resolution:**

After verification, we will arrange for a replacement part, product exchange, or refund as quickly as possible.



### If it does not affect normal use:

**Steps:**

1. Contact our customer service team (by email: **service@grandtunnel.com**).
2. Provide a description of the damage and include relevant photos or videos.

**Resolution:**

We will provide repair guidance or an appropriate compensation plan based on the specific situation.

### Contact Us:

Customer Service Email: **service@grandtunnel.com**

## Helpful Tips

### To process your issue efficiently, please prepare the following information:

- Order details (order number, purchase platform, purchase date).
- Clear photos or videos.
- We are committed to providing quick and professional solutions, no matter the size of the issue, to ensure your satisfaction.

**Thank you for your trust and support!**
**We hope you enjoy using our product!**



EN

# Parts List

**Please check you have all the panels listed below.**



1 x1



2 x4

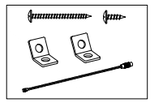

3 x1



Email : **service@grandtunnel.com**

# Nightstand Section Installation



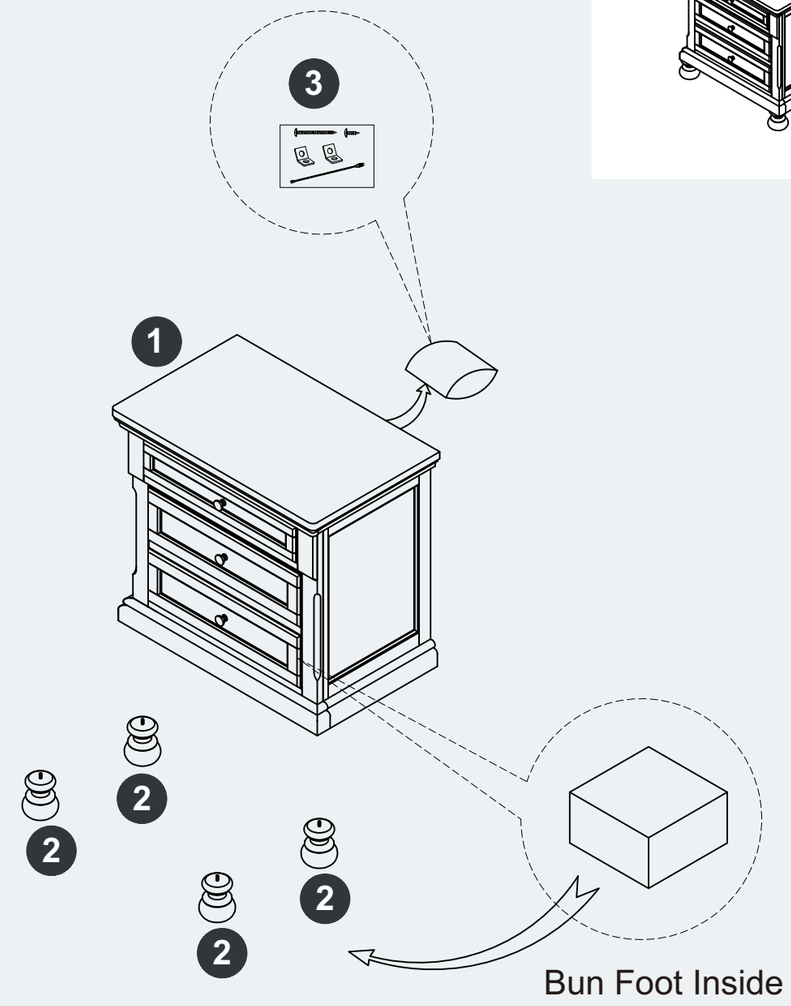


1.Remove the Tipping Restraint Pack from back of Nightstand.
2.Remove the Foot Box from the bottom drawer.

Email : **service@grandtunnel.com**



EN

## Step 1

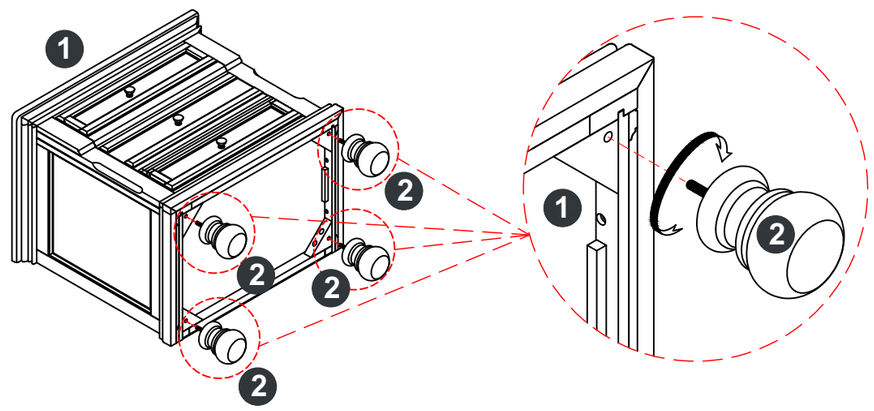


• Attach the Foot (2) to Part (1), and tighten them by hand in a clockwise direction.

**Note:**
**• Ensure the foot is tightened vertically (do not tilt it). If the four feet are uneven, adjust them as needed until all are properly balanced.**

## Step 2

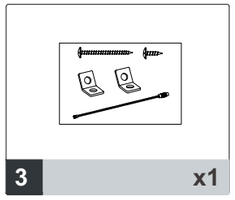


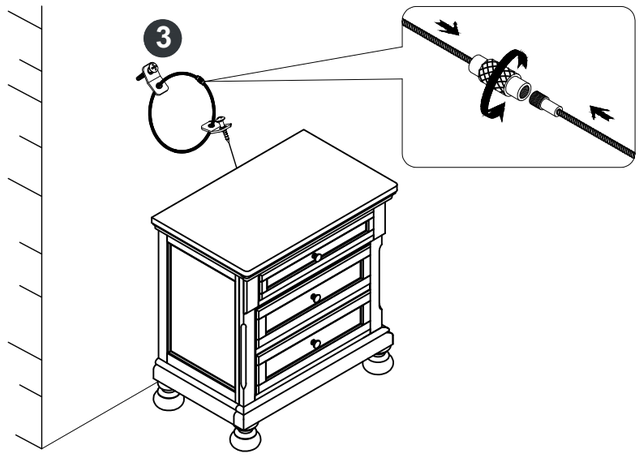


**Warning:**
**Before drilling, check wall for hidden pipes and cables.**

• The unit is floor standing, but it is recommended that the unit is secured to the wall.
1. Move the unit into desired position.
2. Mark the wall with a suitable scribe the position of the fixing holes.

**Note:**
**• To hide the straps behind the unit, drill the holes lower than the top of the unit.**



Email : **service@grandtunnel.com**

## Tips:

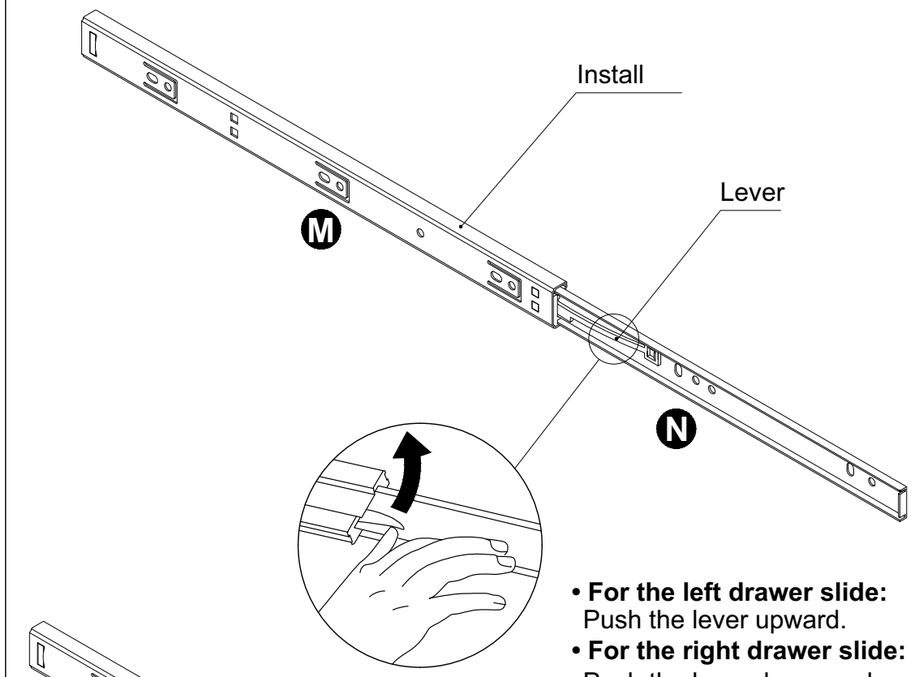


**• For the left drawer slide:**
Push the lever upward.
**• For the right drawer slide:**
Push the lever downward.

**Note:**

**• Carefully check the orientation of the slides during reassembly to avoid incorrect connections .**
**• If you encounter resistance while separating the slides, make sure the lever is fully engaged.**

Email : **service@grandtunnel.com**



EN

# A Guide to Wall Mounting & Fixings

## Important Note:

- If plastic wall plugs (rawl plugs) are supplied with your product, e.g.:



- these are only suitable for use in masonry walls.
- If you are in any doubt about the correct wall plugs for your wall, seek professional advice.
- Failure of the product due to using the incorrect fixings is the responsibility of the installer.

## Important : When drilling into walls always check that there are no hidden wires or pipes etc.

Make sure that the screws and wall plugs being used are suitable for supporting your unit. Consult a qualified tradesperson if you are unsure.

**Hints:**

1: General rule: always use a larger screw and wall plug if you are not sure.

2: Ensure you use the recommended drill bit to match the wall plug and hole size.

3: Ensure you drill the hole horizontally; do not force the drill or enlarge the hole.

4: Take extra care when drilling high walls, ceilings and ceramic tiles. Ensure wall plugs are inserted beyond the thickness of the ceramic tiles to avoid the tiles splitting or cracking.

5: Ensure wall plugs are well fitted and are a tight fit in the drilled hole.

## Types of walls

You can use one of the following types of wall plug if your walls are made of brick, breeze block, concrete, stone or wood.

### 1. "General Purpose" wall plug

Generally aerated blocks should not be used to support heavy loads, use a specialist fitting in this case. For light loads, general purpose wall plugs can be used.

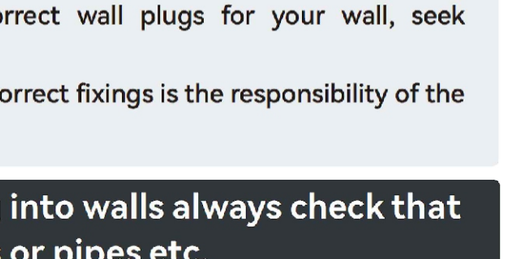



Email : **service@grandtunnel.com**

EN

### 2. "Plasterboard" wall plug

For use when attaching light loads onto plasterboard partitions.

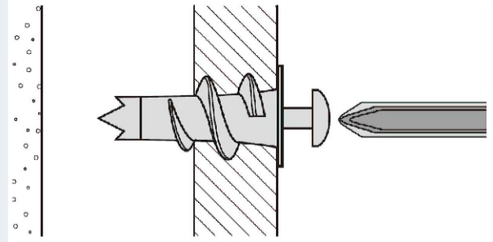

### 3. "Cavity Fixing" wall plug

For use with plasterboard partitions or hollow wooden doors.

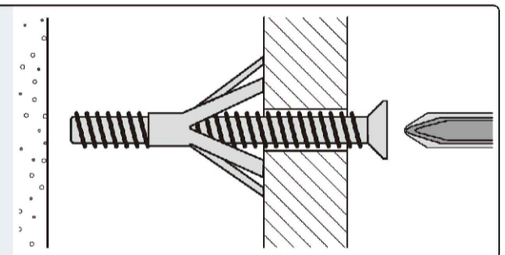

### 4. "Cavity Fixing – Heavy Duty" wall plug

For use when fitting or supporting heavy loads such as shelving, wall cabinets and coat racks.

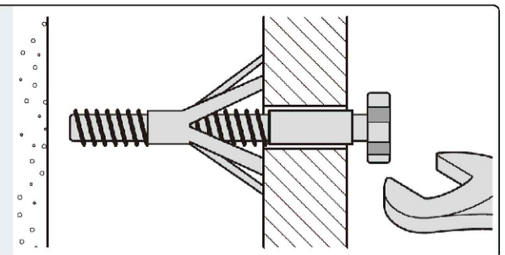

### 5. "Hammer Fixing" wall plug

For use with walls stuck with plasterboard. The hammer fixing allows it to be fixed to the wall rather than the plasterboard. Always check the fixing is secure to the retaining wall.

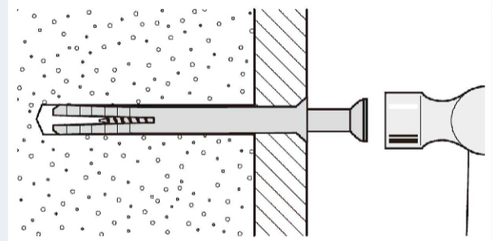

### 6. "Shield Anchor" wall plug – heavy loads

For use with heavier loads such as TV and HiFi speakers and satellite dishes etc.

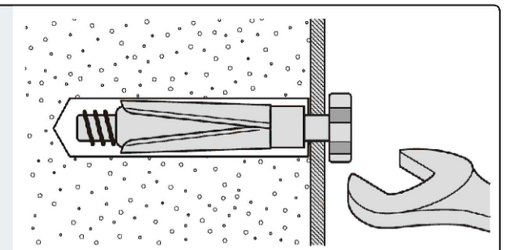

## Care & Maintenance

Safety: always check the fitting and location to ensure your safety in and around the home.

Fitting: from time to time check the fitting to ensure the wall plugs or screws do not become loose.

Email : **service@grandtunnel.com**