ZEAFiVE®

PRODUCT INSTRUCTION VIDEO

SIZE DETAILS

ACRYLIC SHOWER BASE

MODEL SB4832R

All dimensions are nominal,
minor variations may occur.

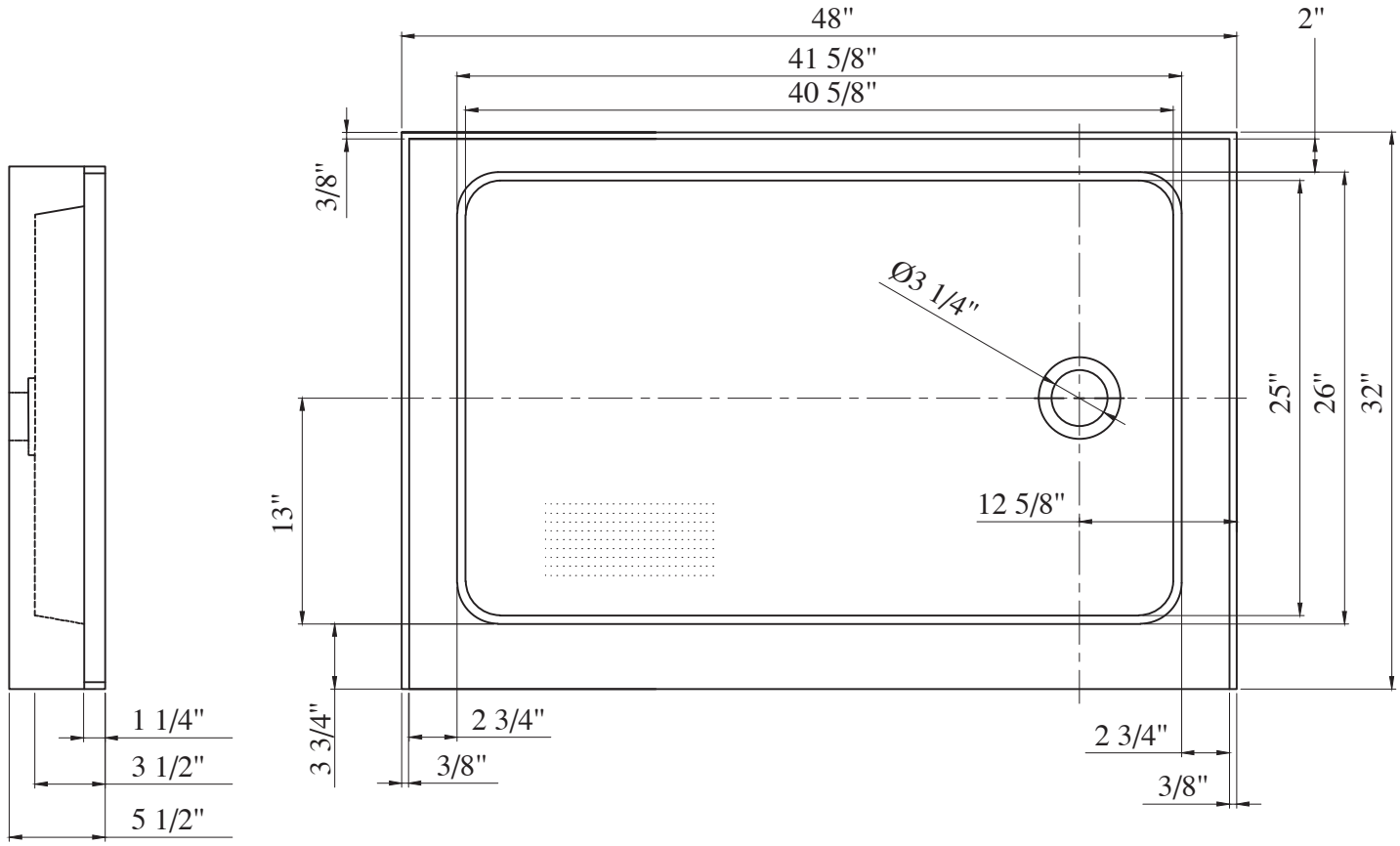

Email: service@bestgosupplychaininc.com