TECHNICAL DRAWINGS

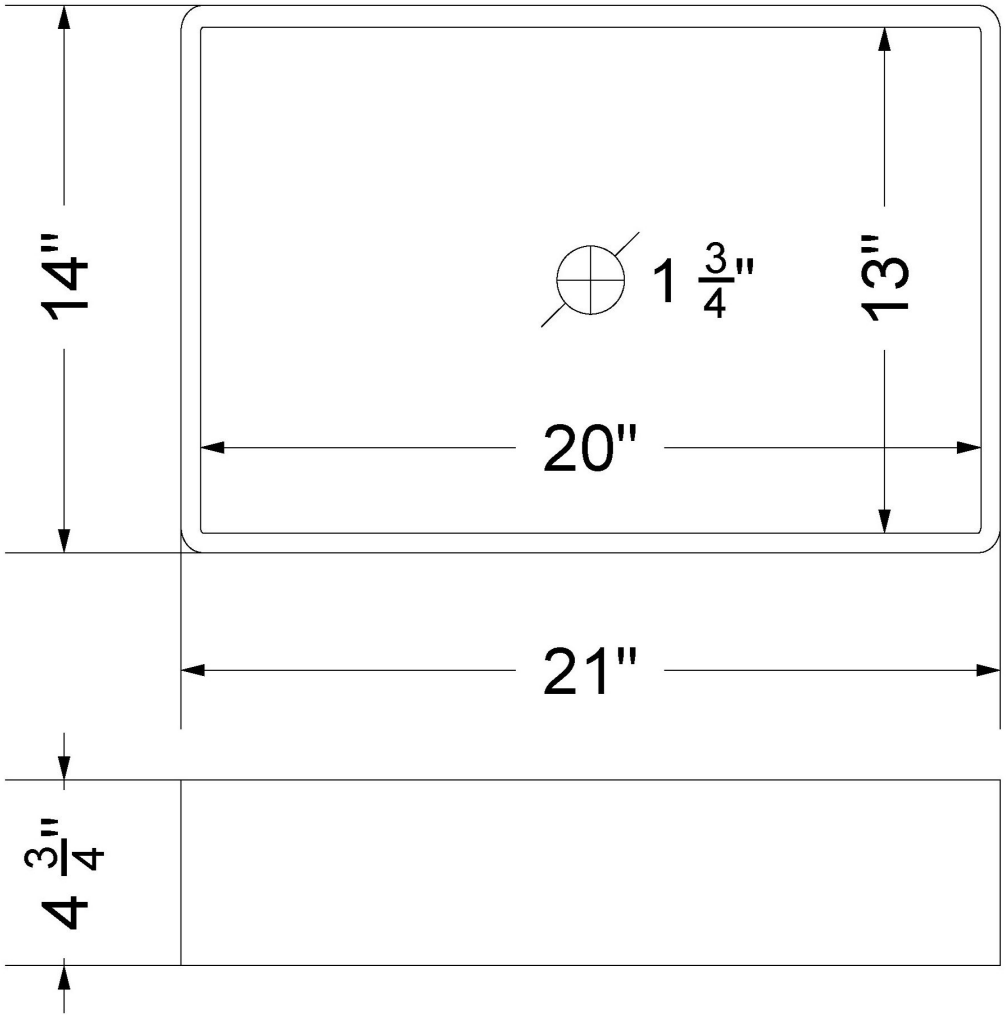

Vanderloc® reserves the right to make revisions without notice to product specifications. All product dimensions are nominal. For the most current specification sheet, visit www.vanderloc.com.