Assembly Instruction

DRESSER W/HIDDEN DRAWER
MIRROR

PART LIST

1	DRESSER	1PC
2	BUN FOOT	4PCS
3	MIDDLE SUPPORT LEG	1PC
4	MIRROR	1PC
5	MIRROR SUPPORT	2PCS

ANTI-TIPPING HARDWARE PACK

A		BRACKET	2PCS
B		TIE WRAP	1PC
C		LONG SCREW #8x2"L	1PC
D		SHORT SCREW #8x5/8"L	1PC

HARDWARE LIST IN -6

E		BOLT ∅1/4"x1 1/4"L	8PCS
F		SPRING WASHER ∅1/2"x∅1/4"	8PCS
G		FLAT WASHER ∅3/4"x∅1/4"	8PCS
H		ALLEN KEY 1/4"	1PC

STEP 1

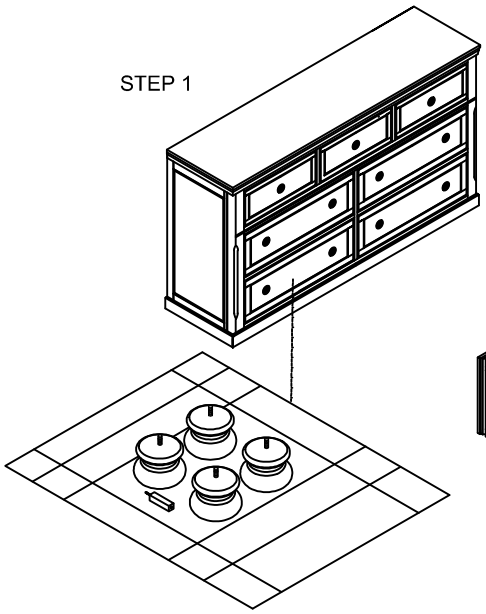

STEP 2

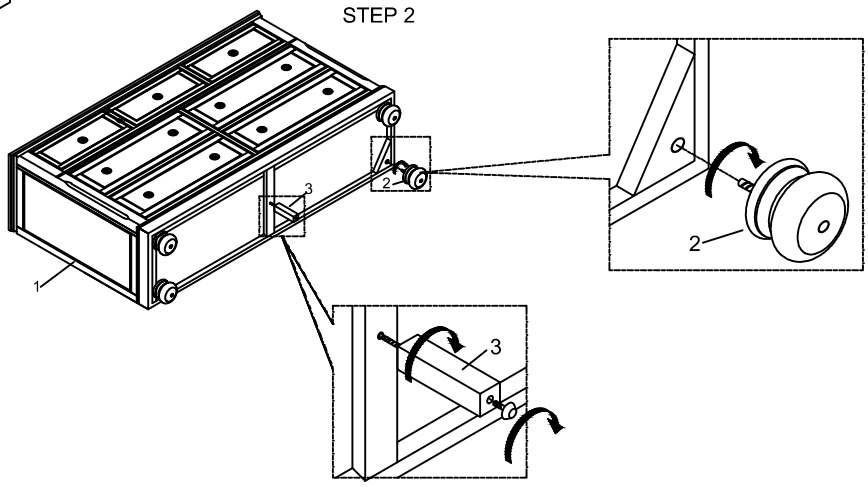

STEP 3

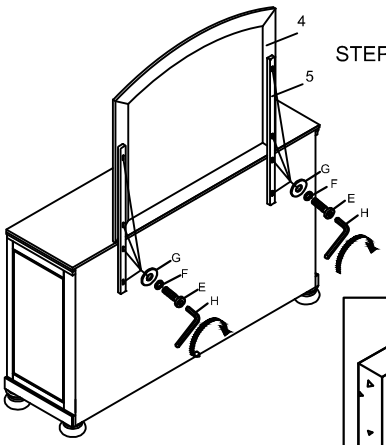

STEP 4

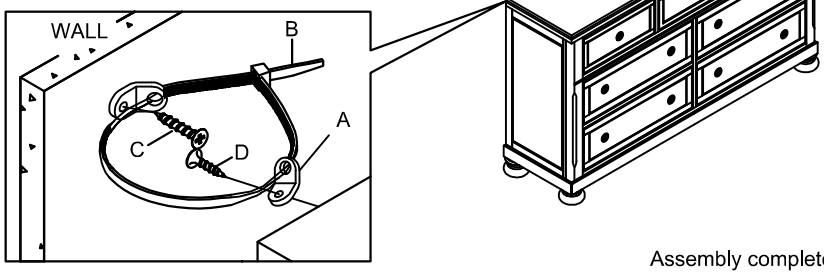

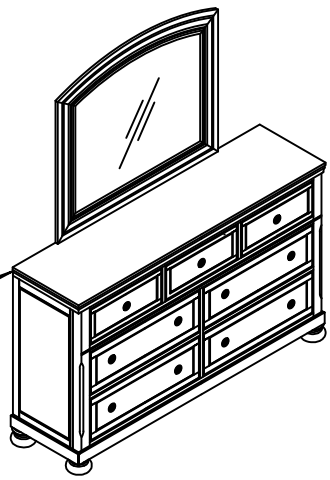

Assembly completed

- **For items use on wooden floor hard surfaces or carpets.**
  It is recommended to install protective pads under all legs and supports to avoid/prevent from damages/scratches and discoloration.
- **Hardware may loosen over time. Periodically check to make sure all connections are tight. Re-tight if necessary.**

MADE IN VIETNAM