KINGSTON

TO ORDER PARTS, CALL: 1-877-252-7277
www.kingstonbrass.com

KB8330,1,2,7,8PL

Single Handle Pressure Balanced Tub & Shower Faucet

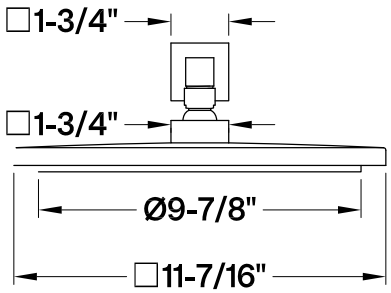

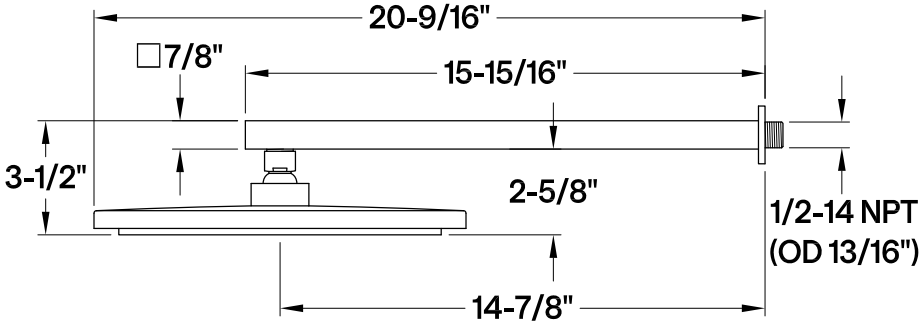

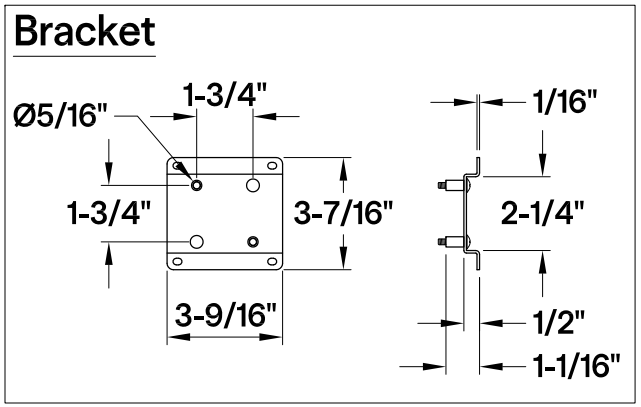

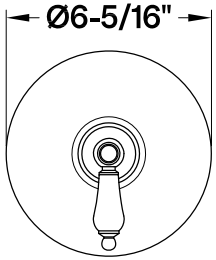

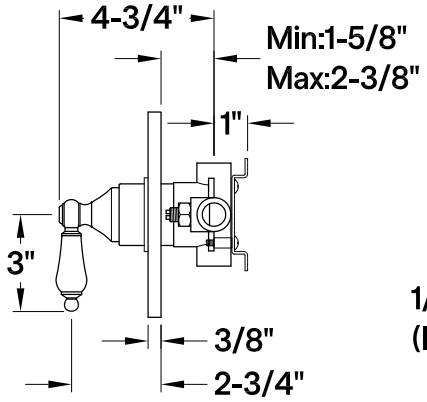

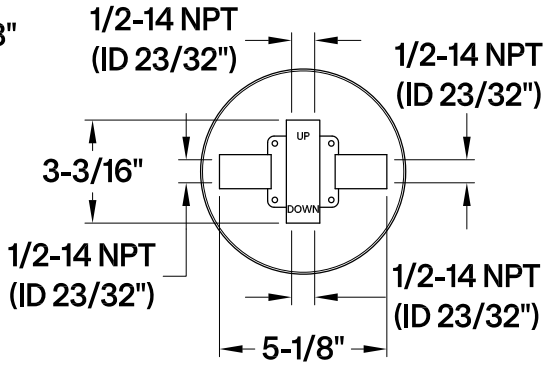

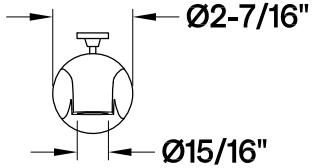

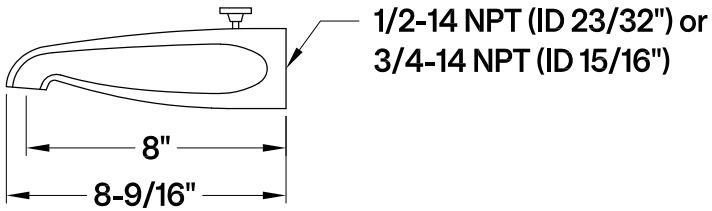

2026-04-A