# ASSEMBLY INSTRUCTIONS

| ITEM | PART NAME | QTY |
|---|---|---|
| 1 | SEAT | 1 PC |
| 2 | Leg | 2 PCS |
| 3 | Support | 2 PCS |

| ITEM | HARDWARE NAME | DESCRIPTION | QTY |
|---|---|---|---|
| A | JCBC BOLT M6 x 50mm | | 4 PCS |
| B | JCBC BOLT M6 x 40mm | | 6 PCS |
| C | FLAT WASHER M6 x 22 mm | | 6 PCS |
| D | SPRING WASHER | | 10 PCS |
| E | FLAT WASHER M6 x 13 mm | | 4 PCS |
| F | BARREL NUT | | 4 PCS |
| G | ALLEN KEY | | 1 PC |

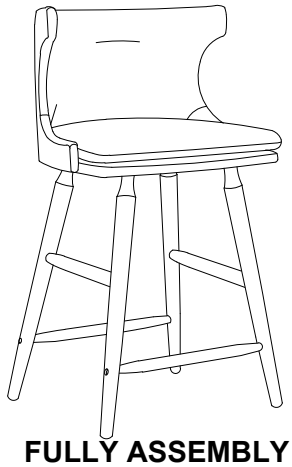

**FULLY ASSEMBLY**

STEP 1

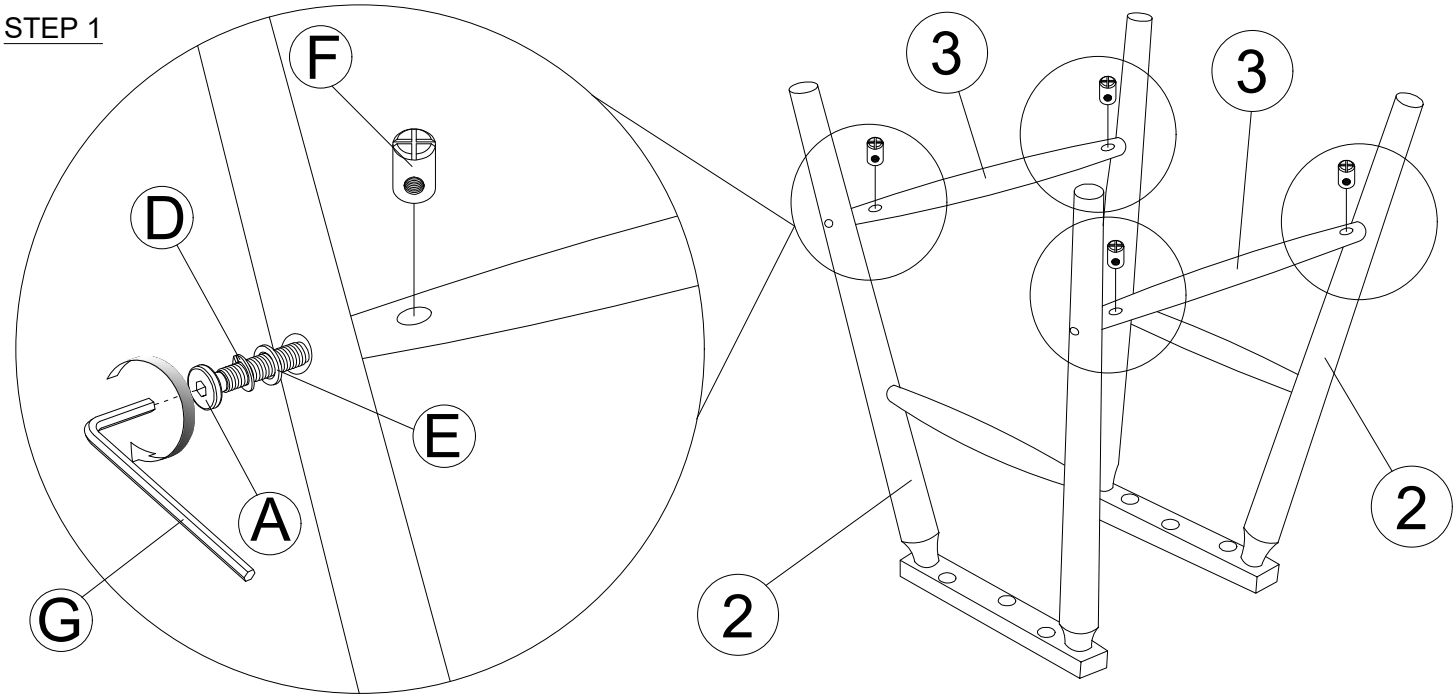

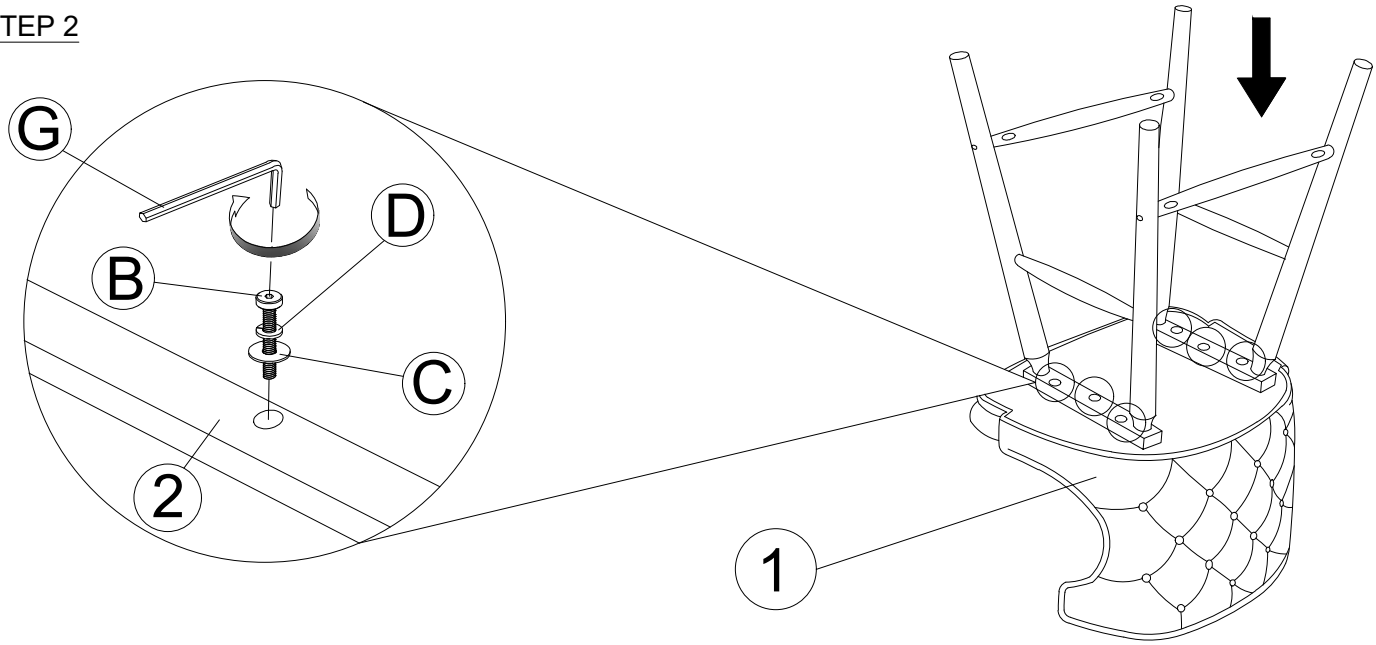
STEP 2