PARIS MIRROR

PRODUCT SPECIFICATIONS
NYXBLK08

NYX Towel Warmer in Black 24 x 71







DESCRIPTION

Designed with a refined ladder-style silhouette and polished rounded details, NYX adds a modern spa-inspired touch while keeping your towels warm, dry, and ready to use. With its slim wall-mounted profile, this towel warmer is ideal for contemporary bathrooms, ensuite spaces, luxury renovations, and hospitality projects. Its generous height provides excellent towel capacity without overwhelming the wall, making it both practical and visually striking.

FEATURES & BENEFITS

- Comes with color matched metal brackets
- Surface Temp: Between 100° F - 160° F
- Made from stainless steel
- Engineered for Splash Protection
- Integrated Wiring
- Heats up in 5 Minutes

AVAILABLE TOWEL WARMER OPTIONS

- Range of designer finishes

SPECIFICATIONS

- **Dimensions:** 24" x 71" x 4.7"
- **Ingress Protection Rating:** IP44
- **Power Requirement:** 200 W

SAFETY SPECIFICATIONS

- Entire assembly meets UL/cUL standards
- International Certifications
- Conforms to CSA standards
- ETL tested and compliant
- Hardwired connection (120 VAC)
- Amperage: 1.32 A
- Resistance: 72

Website: parismirror.com
Phone Number: 1-855-444-9333
Email: info@parismirror.com

PARIS MIRROR USA
1395 Brickwell Avenue, Suite 800
Miami, FL, 33131

PARIS MIRROR CANADA
1625 Chabanel O, Suite 201
Montreal, Qc, H4N 2S7

PARIS MIRROR

PRODUCT SPECIFICATIONS
NYXBLK08

NYX Towel Warmer in Black 24 x 71

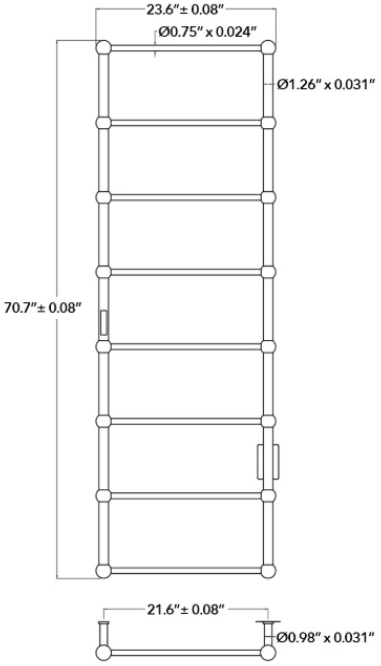

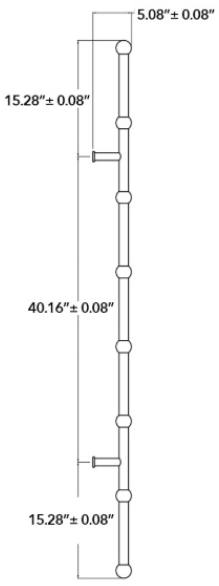

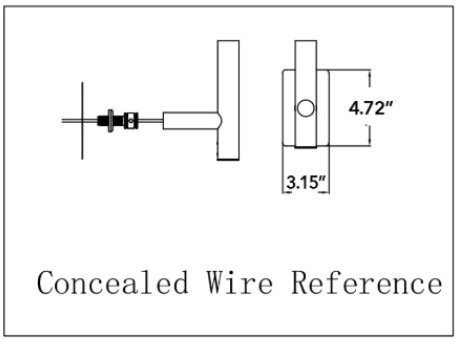

INSTALLATION

- Decide on wall positional placement.
- Prepare & install wall hooks measured to distance between towel warmer's anchors.
- Match & attach 3 electrical wires from towel warmer to home electrical wires: Live to Live, Ground to Ground, Neutral to Neutral.
- Hang and affix to wall.

CARE & SAFETY

- Wear suitable eye wear protection when drilling. Use caution when using power tools near water, beware of hidden cables or pipes.
- Be cautious if drilling on tiled surfaces in case the drill slips. Applying a piece of masking tape on the wall before marking out fixing holes can help stopping the drill from moving.

CLEANING & MAINTENANCE

- It is recommended to clean the unit with a soft, dry, non-abrasive cloth when turned off.
- Never use cleaning agents or abrasive material on any type of surface finish.

Website: parismirror.com
Phone Number: 1-855-444-9333
Email: info@parismirror.com

PARIS MIRROR USA
1395 Brickwell Avenue, Suite 800
Miami, FL, 33131

PARIS MIRROR CANADA
1625 Chabanel O, Suite 201
Montreal, Qc, H4N 2S7