BED FRAME

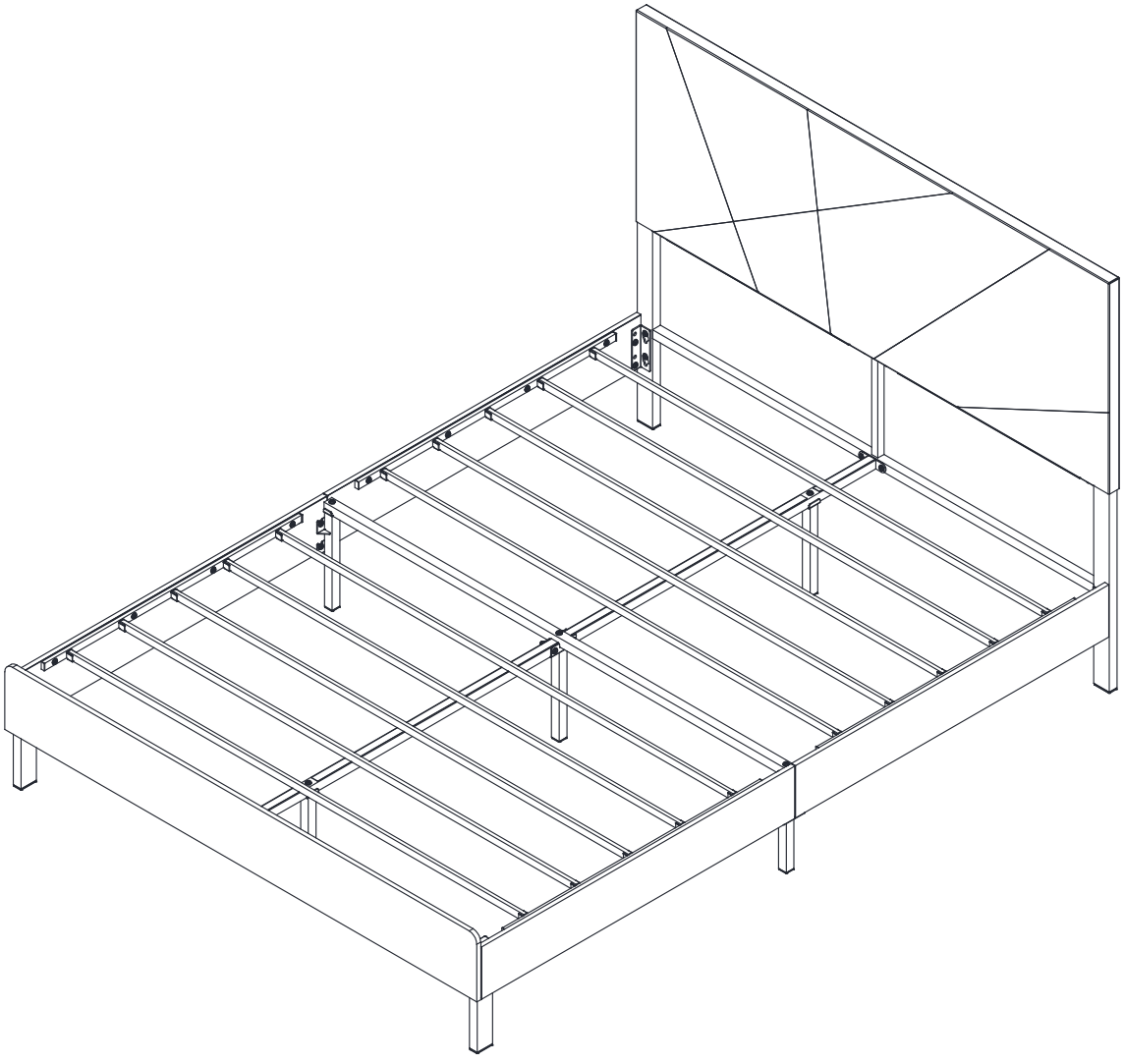

Thank you for choosing our products, please assemble and use it following the instructions.

Assembly Instruction

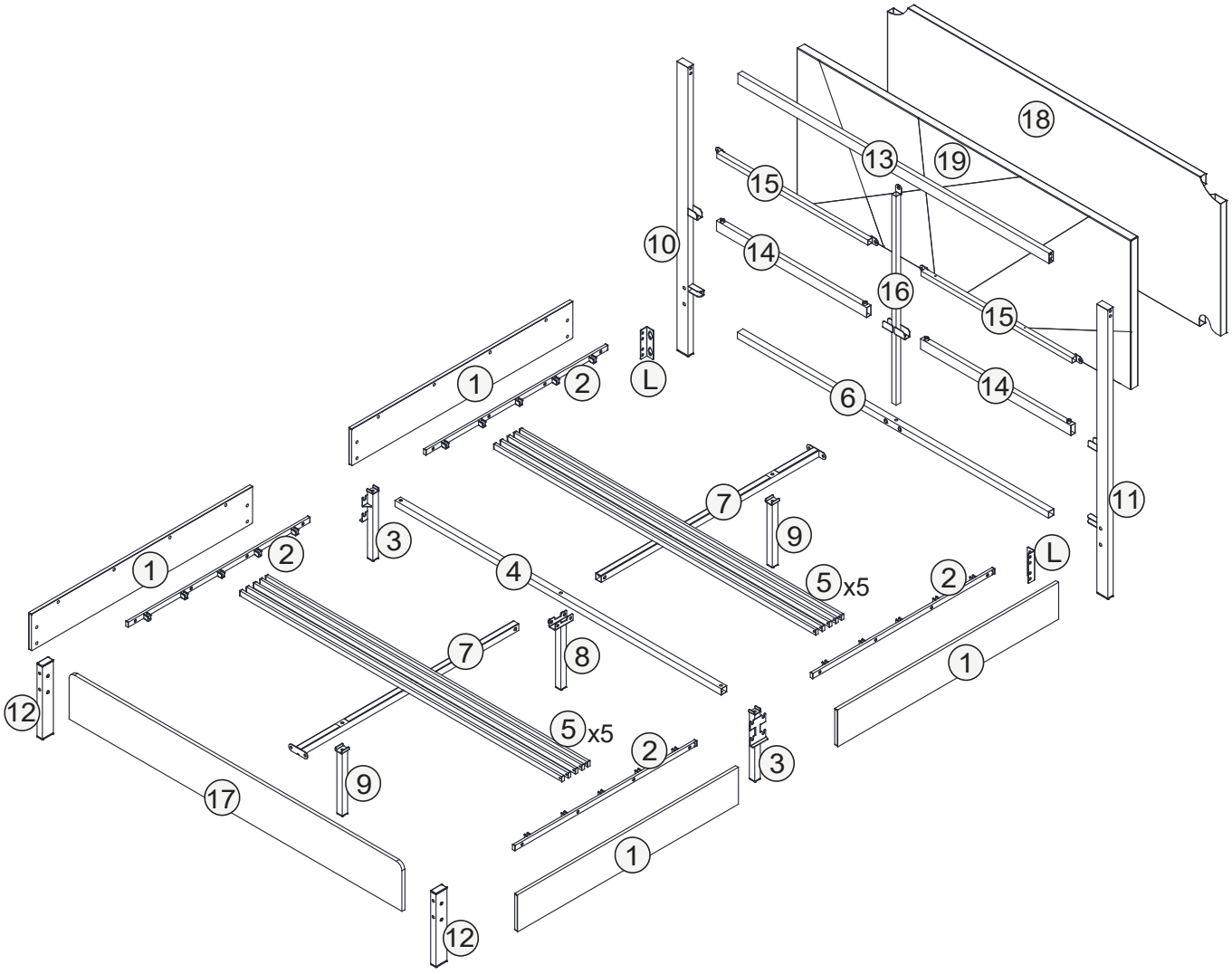

Important Note

HARDWARE NOTE :

1.Two or more people are required for assembly

2.Do not screw on the bolts too tight unless the installation is done. Make sure all bolts are tightly screwed before you use it.

Components

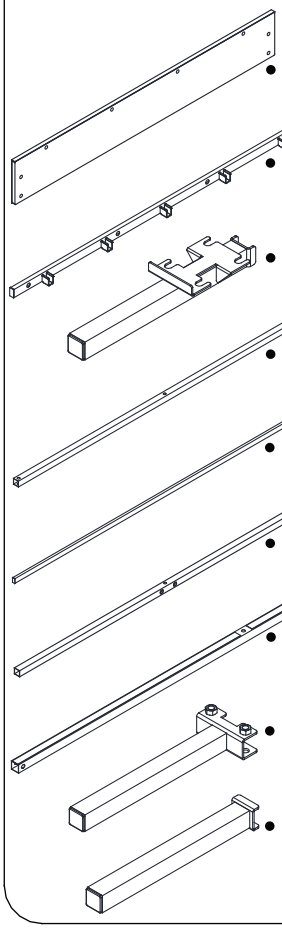

1 x4pcs
2 x4pcs
3 x2pcs
4 x1pc
5 x10pcs
6 x1pc
7 x2pcs
8 x1pc
9 x2pcs

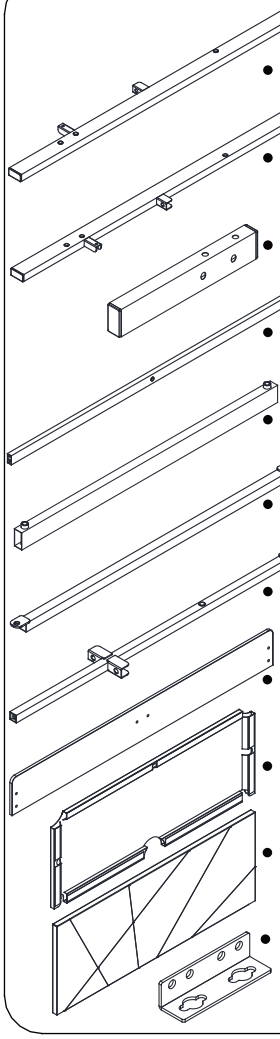

10 x1pc
11 x1pc
12 x2pcs
13 x1pc
14 x2pcs
15 x2pcs
16 x1pc
17 x1pc
18 x1pc
19 x1pc
L x2pcs

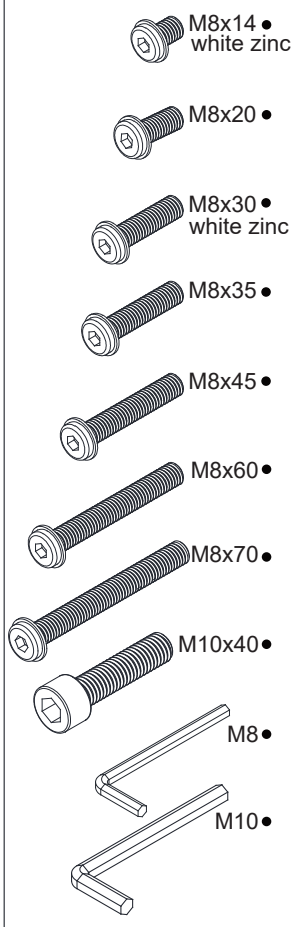

M8x14 white zinc A x21pcs
M8x20 B x17pcs
M8x30 white zinc C x4pcs
M8x35 D x8pcs
M8x45 E x3pcs
M8x60 F x5pcs
M8x70 G x4pcs
M10x40 H x4pcs
M8 I x1pc
M10 J x1pc

1

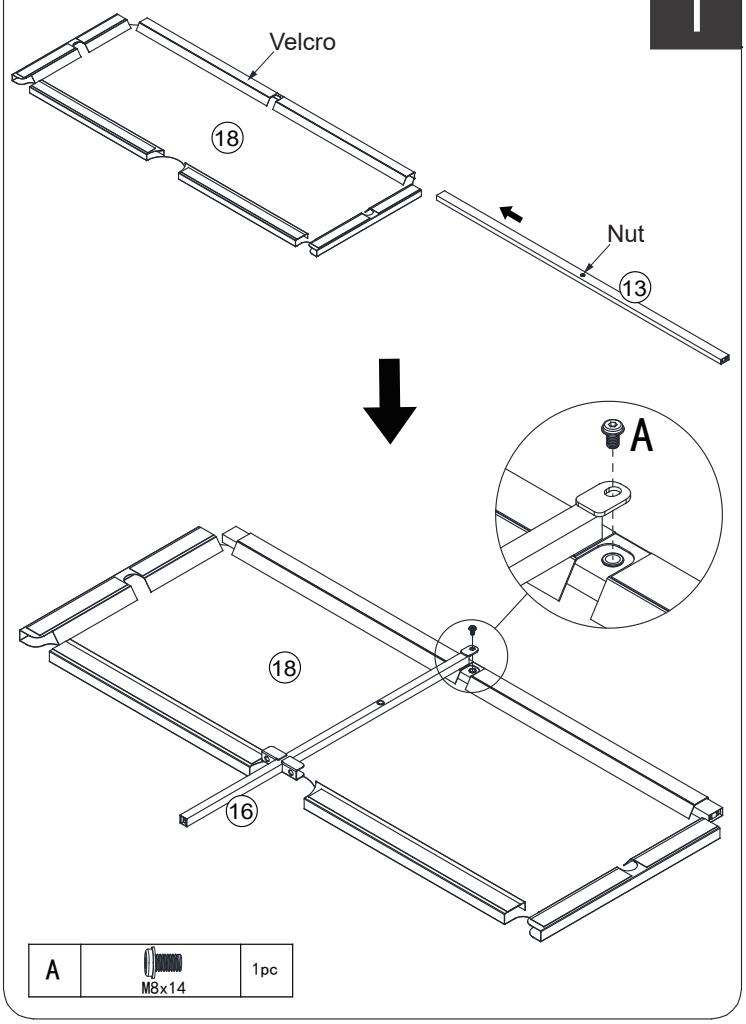

A	M8x14	1pc

2

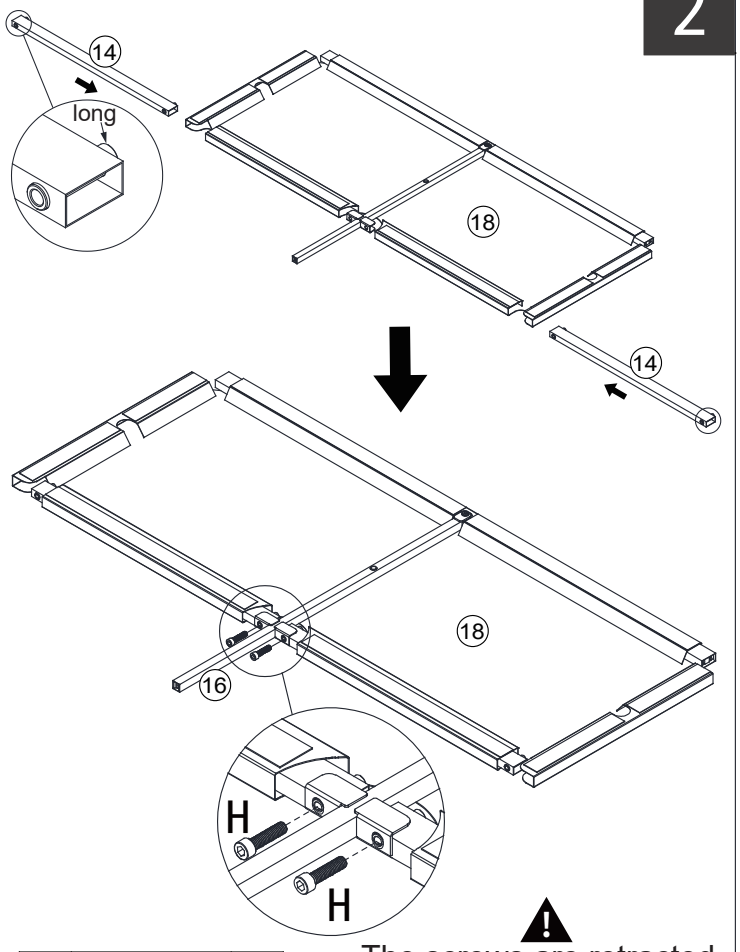

H	M10x40	2pcs

The screws are retracted by 50 percent.

3

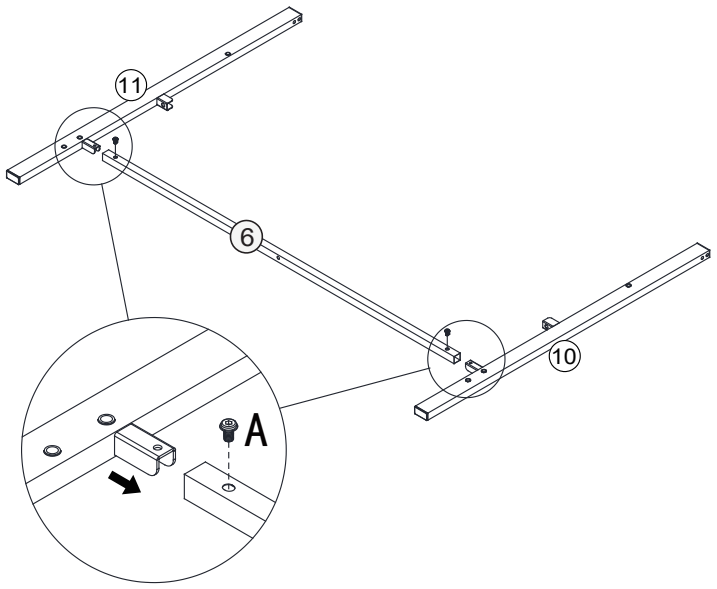

A	M8x14	2pcs	white zinc

4

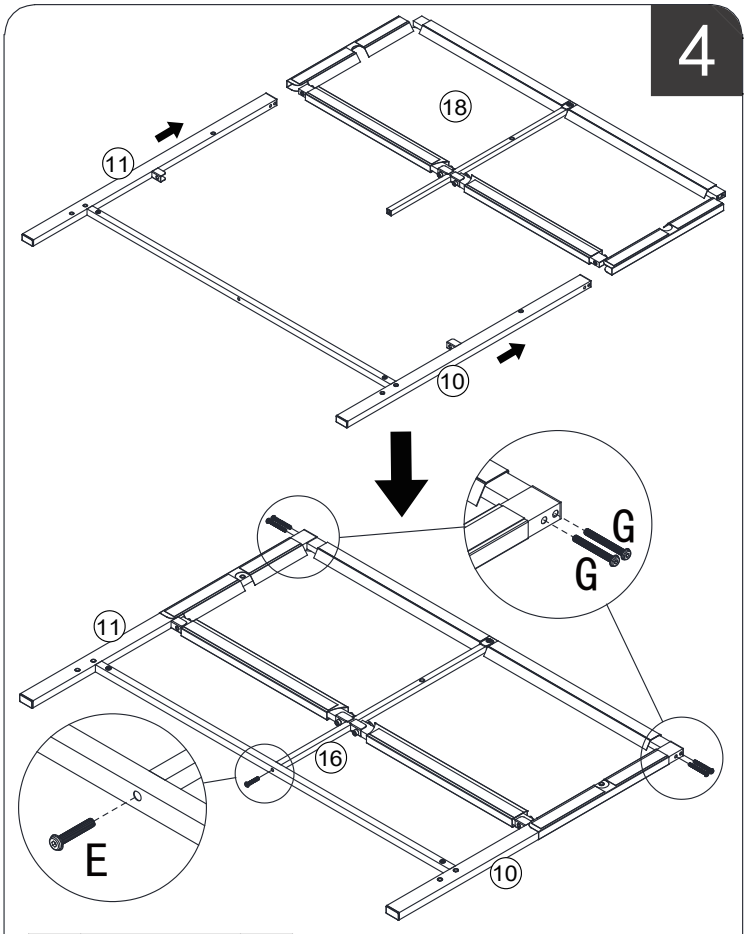

E	M8x45	1pc
G	M8x70	4pcs

5

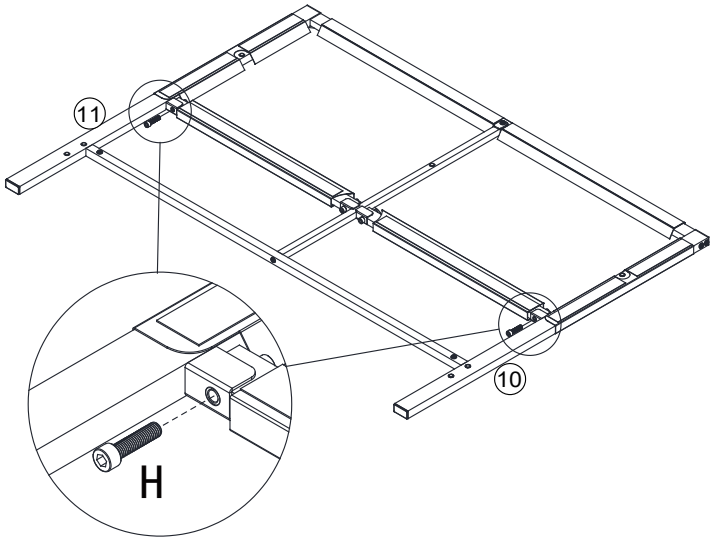

Fully tighten all the screws.

H	M10x40	2pcs

6

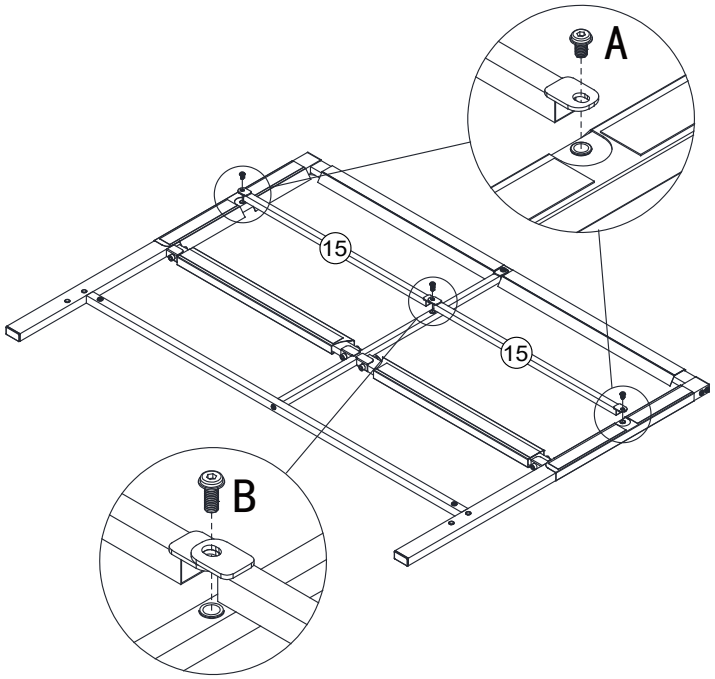

A	M8x14	2pcs	white zinc
B	M8x20	1pc	

7

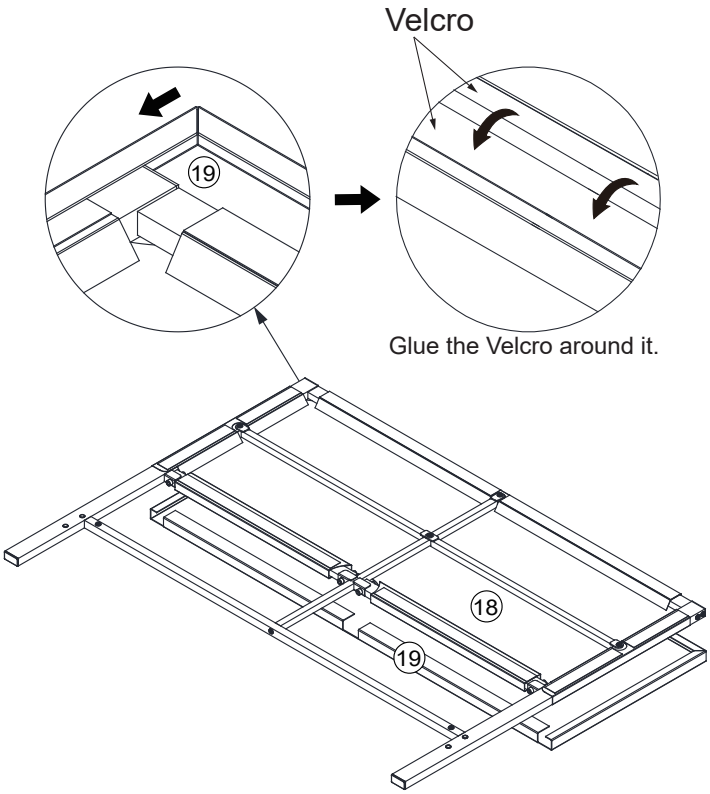

8

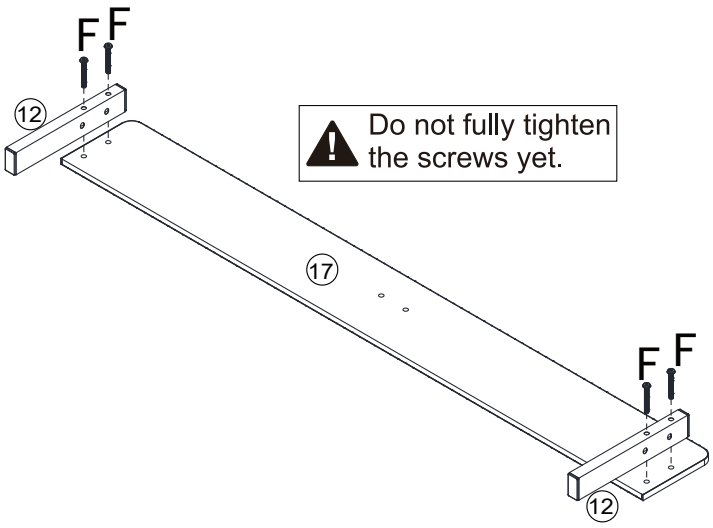

F	M8x60	4pcs	

9

x4

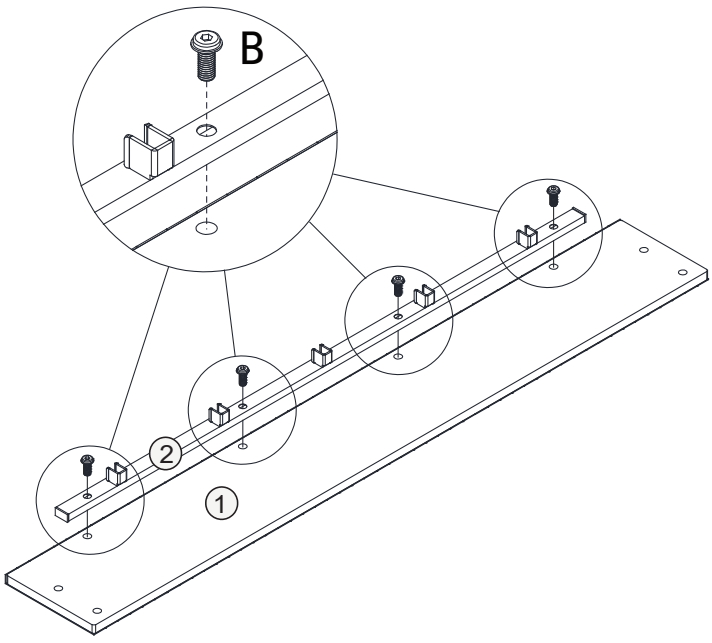

B	M8x20	16pcs	

10

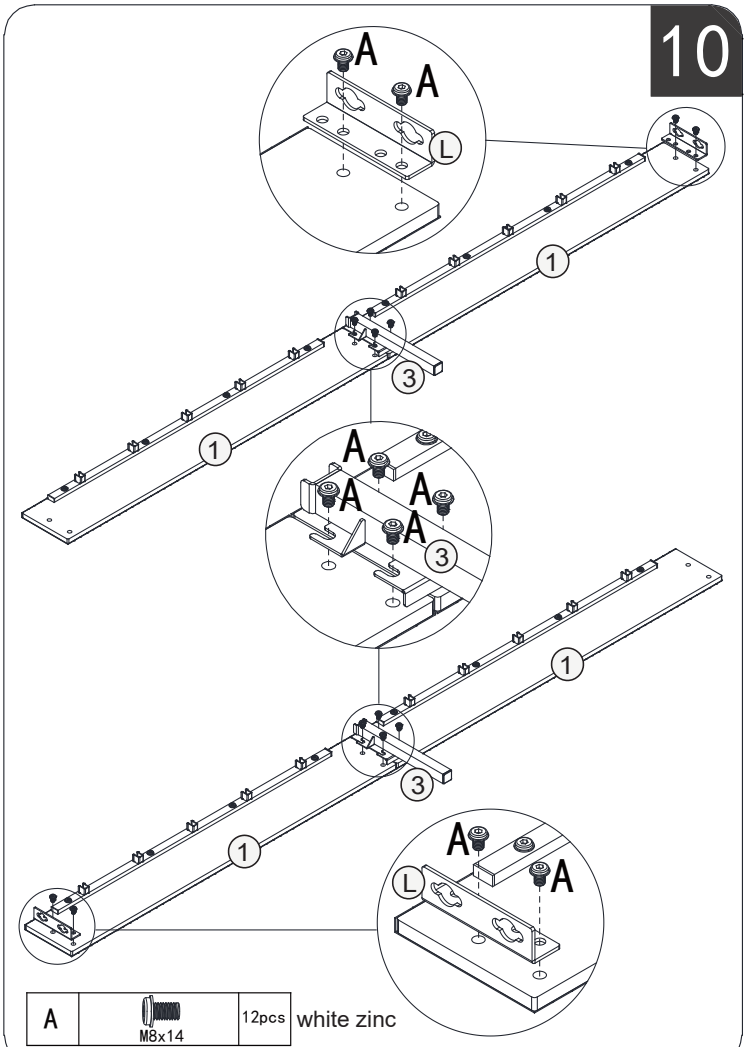

A	M8x14	12pcs	white zinc

11

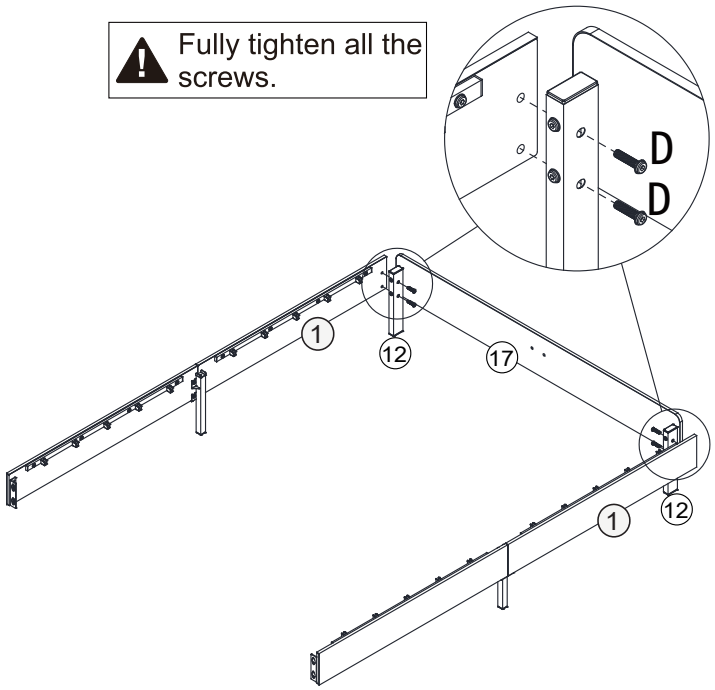

D	M8x35	4pcs

12

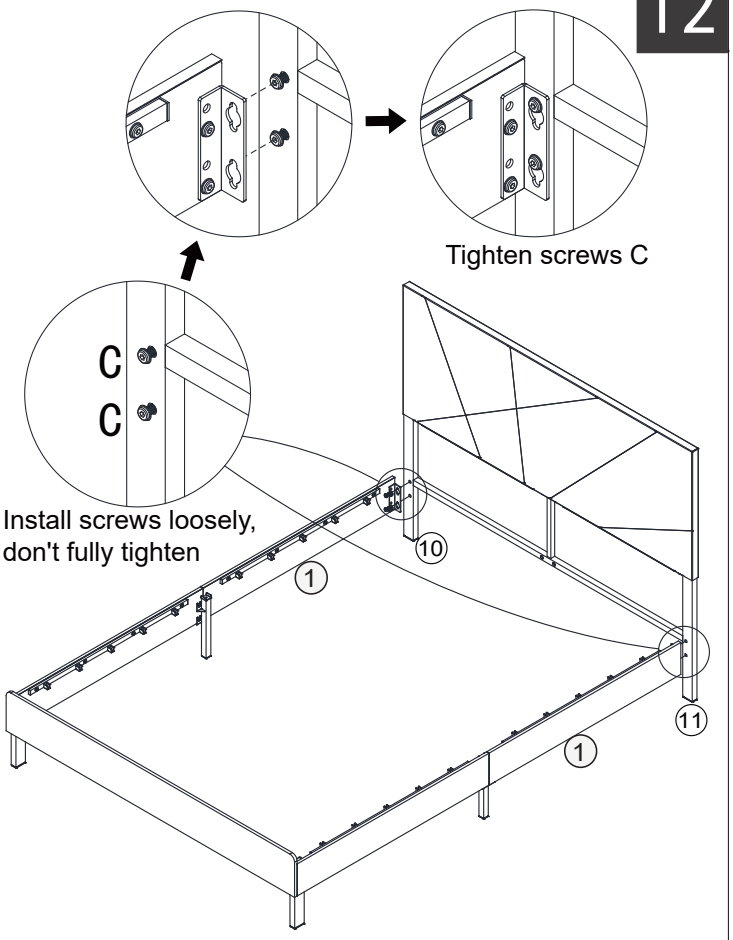

C	M8x30	4pcs	white zinc

13

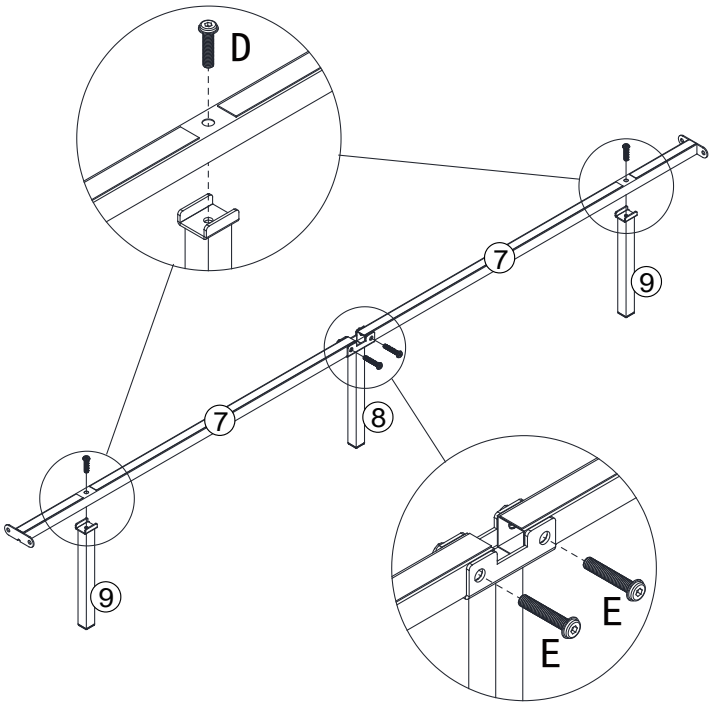

D	M8x35	2pcs
E	M8x45	2pcs

14

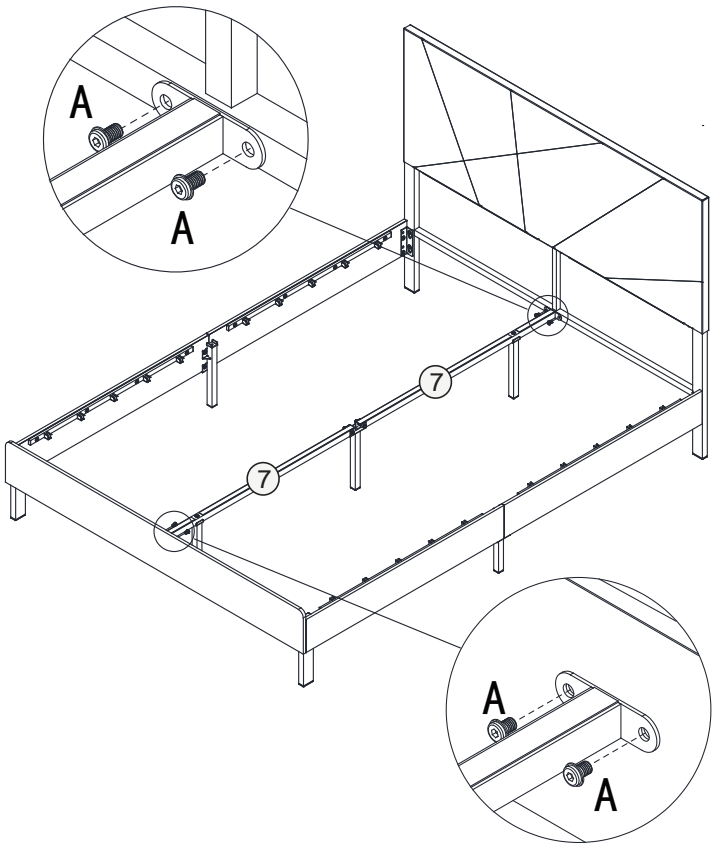

A	M8x14	4pcs	white zinc

To assemble first

15

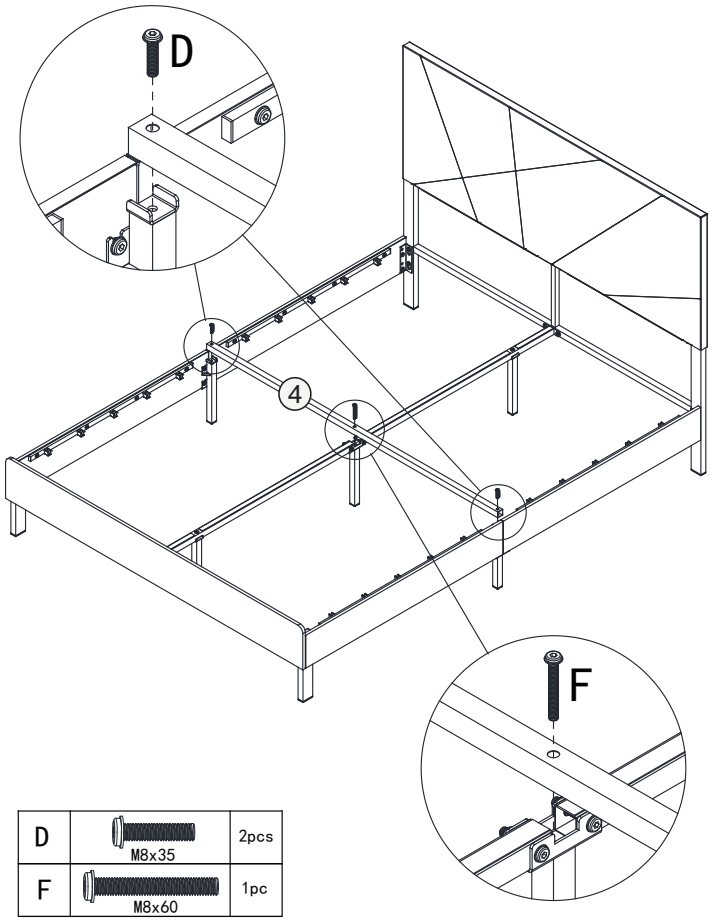

D	M8x35	2pcs
F	M8x60	1pc

16

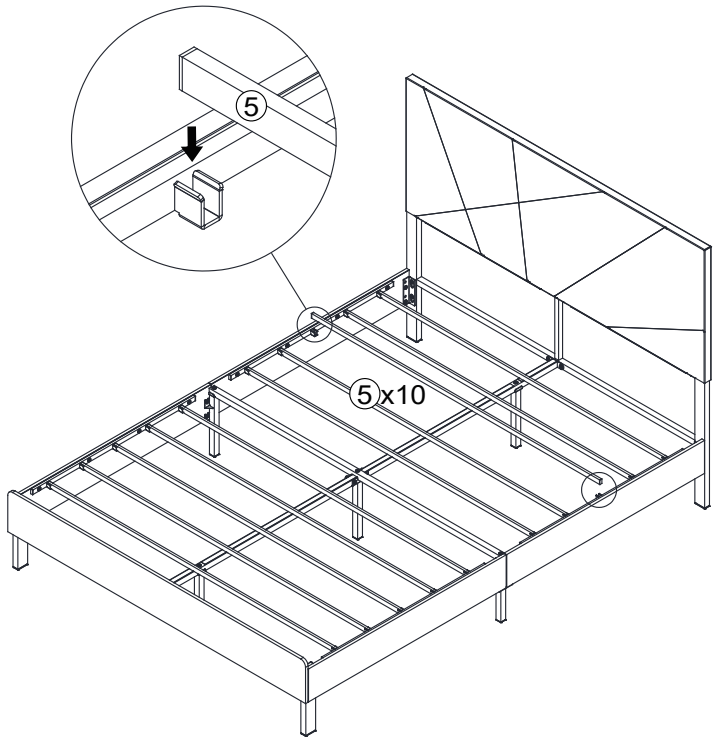

17

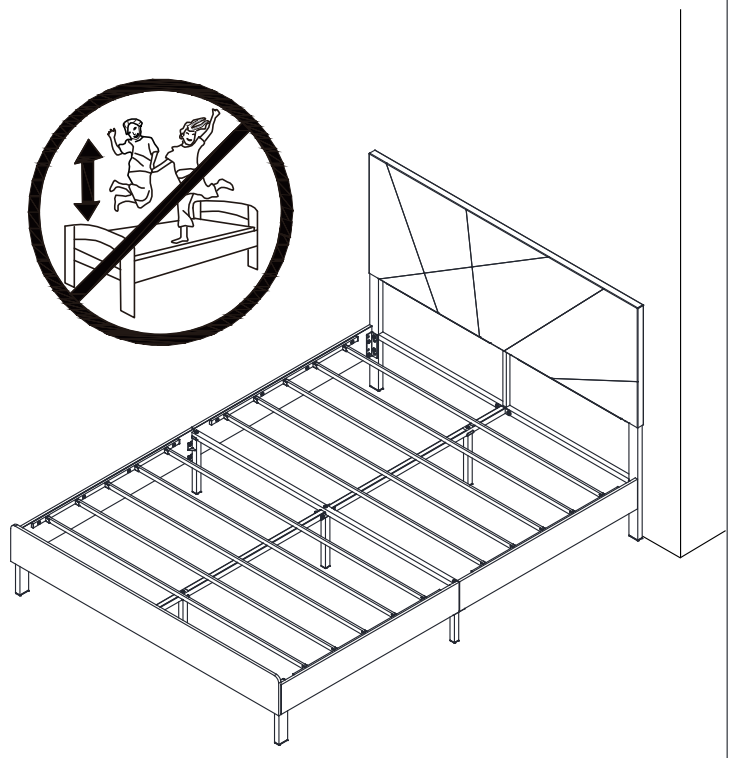

Finish