ASSEMBLY INSTRUCTIONS
—— Metal Patio Dining Table ——

Thanks for choosing our product. Please kindly check parts listed below and read this manual carefully, then assemble them step by step. Please feel free to contact us for any questions.



ATTENTION

1. If there is any part missing, please kindly send us messages to let us know the name of missing part regarding to the first page of instructions. We will send replacement to you asap.
2. If there is any damage, please send clear photos about damaged part to us as attachment, we will check and offer you best solution soon.
3. We are concerned about each customer's experience, if there is any loss or damage, please contact us at any time, we will provide effective solutions.

Part List

A/2PCS 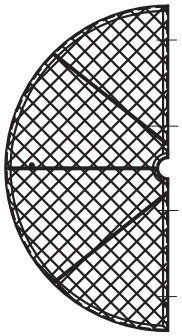	B/1PCS 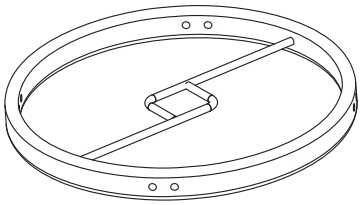	C/4PCS 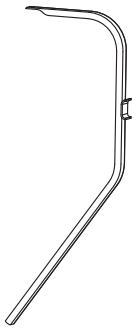
D/1PCS 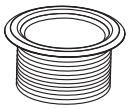	E/1PCS 	F/1PCS 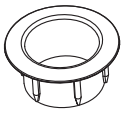
G/1PCS 	a/8PCS  M6*15	b/8PCS  M6*25
	c/20PCS 	d/4PCS 
	e/1PCS 	f/1PCS 

STEP 1

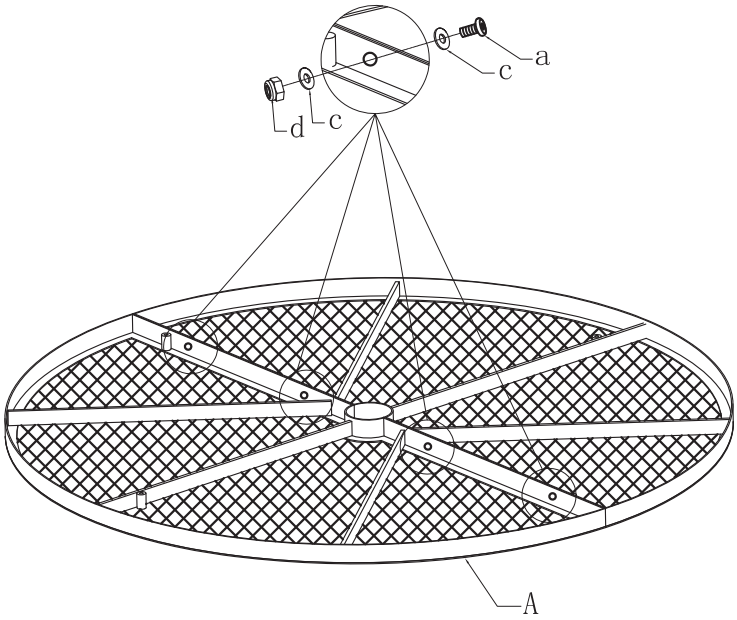

STEP 2

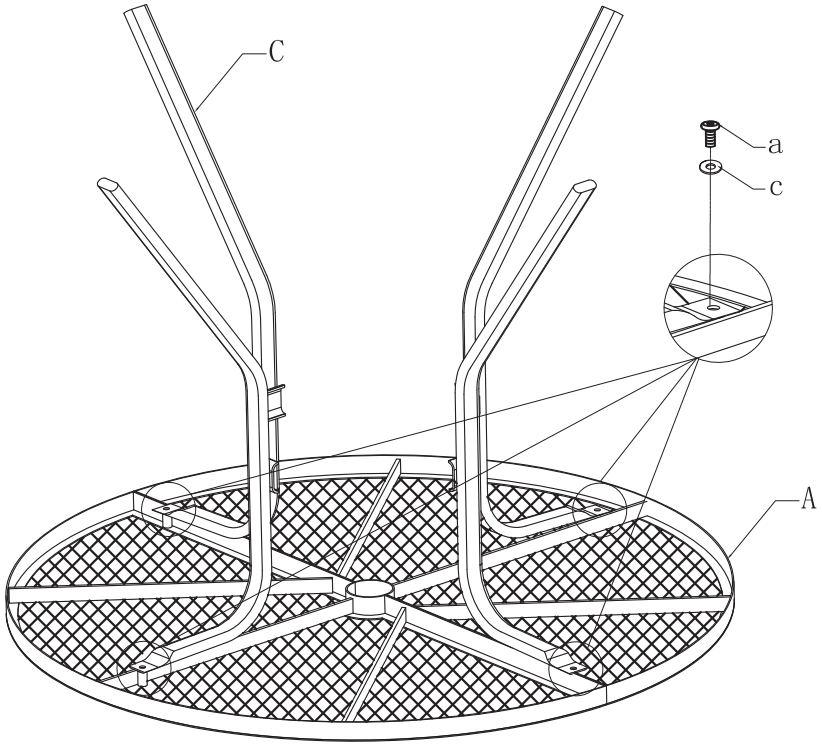

STEP 3

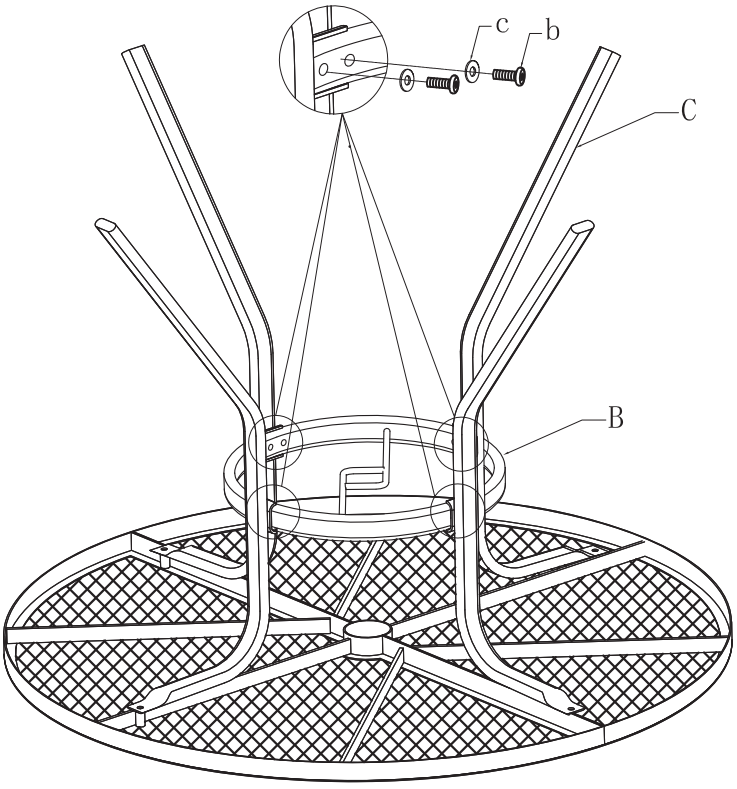

STEP 4

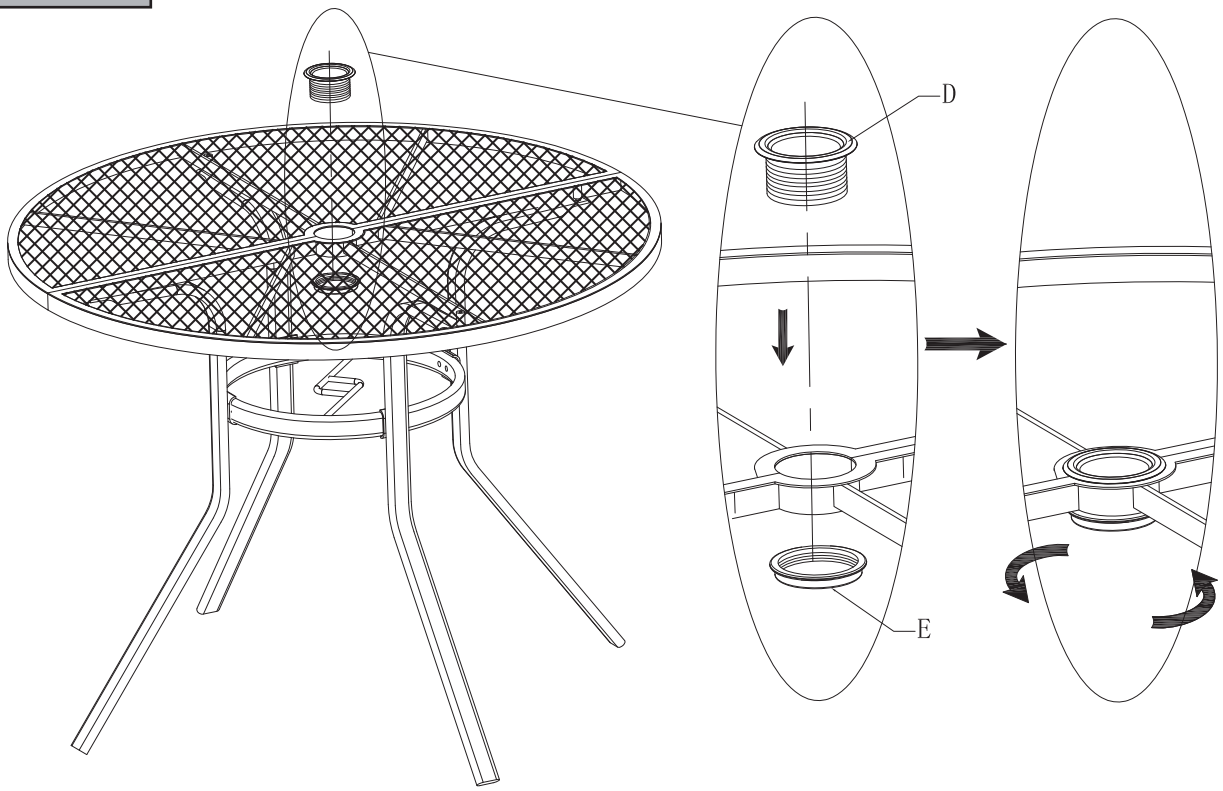

STEP 5

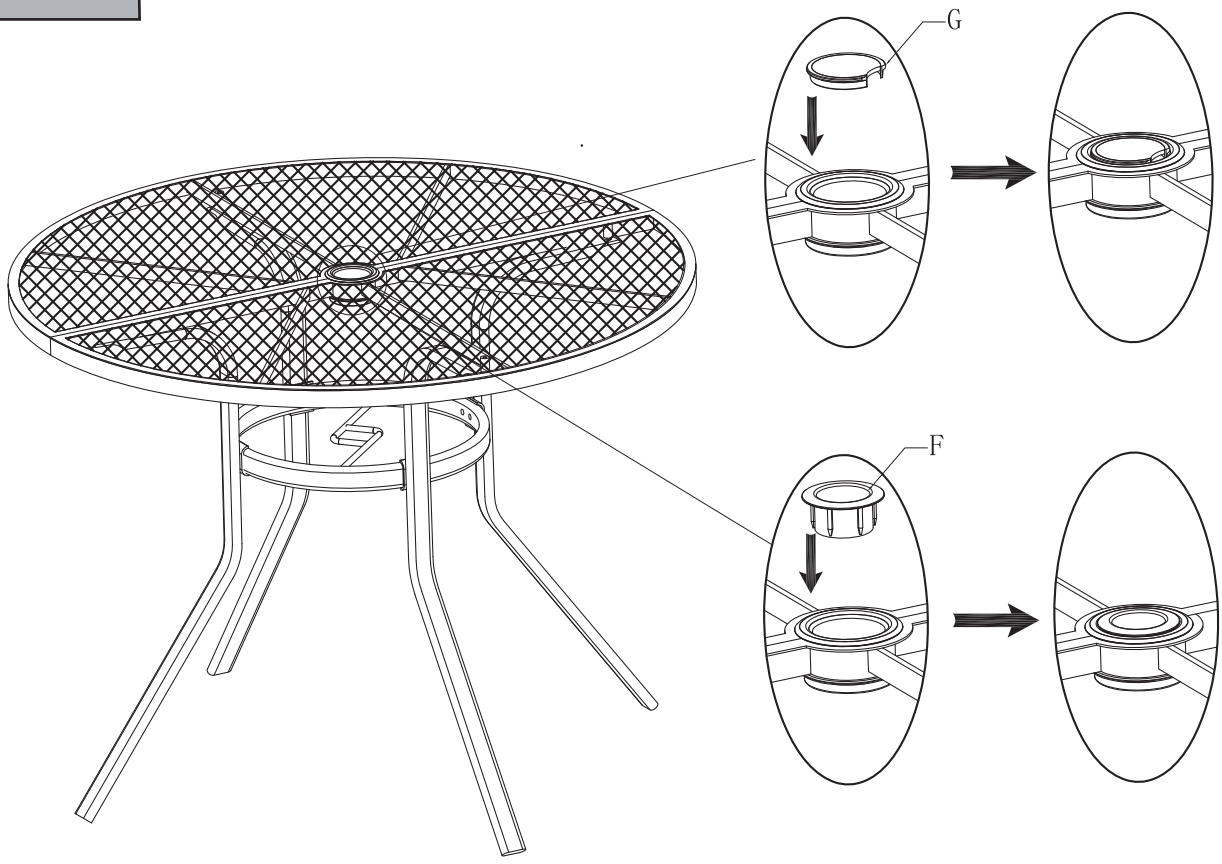

STEP 6

