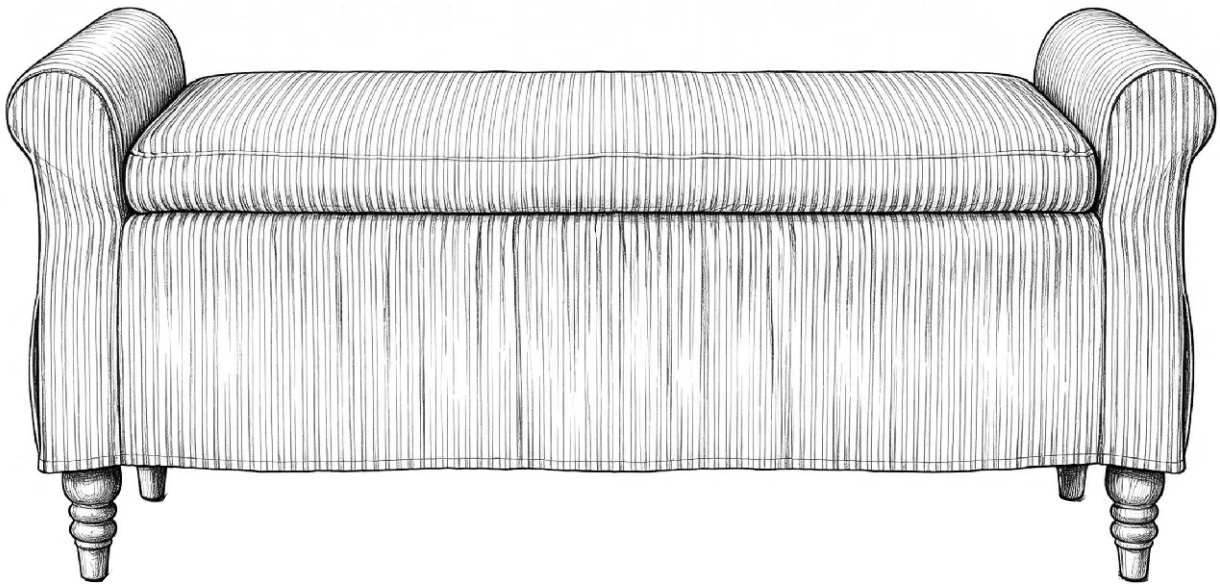

ITEM NO. BEM1951

Scan for manual,
video & advice.

MAINTENANCE AND WARNINGS

Thank You For Choosing Our Furniture.
Please read the instructions and warnings carefully before use, to ensure safe and satisfactory operation of this product.

NOTE :
This brochure contains IMPORTANT safety info. Please read and keep it for future reference.



Weight Limitation
300 LBS


Installation:
15 minutes.


Two Person



Before You Start

Please follow the steps below:

- Unbox the package and check if all parts and accessories are complete.
- If you find something missing, stop assembly and contact your supplier immediately.
- Please do not completely tighten all the hardware until the entire assembly is completed! Be sure to tighten all the hardware once the assembly completed.
- NOTE:Should be assembled on soft surface to keep balance.

After-Sales Service

- If you encounter any issues or need technical support during use, please contact our after-sales team. We offer long-term maintenance and warranty services.



Warranty

We strive to offer high , quality products, and we also try our best to satisfy each and every customer that orders from us with product or service as needed.Each customer must provide a record of their order such as the order number, or item receipt for any items that are out of the warranty period you may also still receive replacement parts by purchasing them with our company if they are available.

Are you having dificulty with assembly? Missing parts? Please send email with your order number to customerservice@hulalahome.com

For return, please check the return policy with the retailer or market place you bought from. Appreciate your purchasing from us. Pop up your life by our furniture piece!

Daily Maintenance

- Keep furniture away from heat.
- Do not use cleaning agents containing acids, alkalis,or corrosive substances, as they may damage the surface. It is recommended to use neutral cleaning agents or specialized furniture cleaners.
- Do not place furniture under direct sunlight, material will possibly fade over time.
- Do not use on site dry cleaning machine.
- Children should not climb or jump on the furniture.
- Do not write on furniture without a padded barrier to protect the surface.
- Not for commercial use, for residential use only.

Exploded Diagram

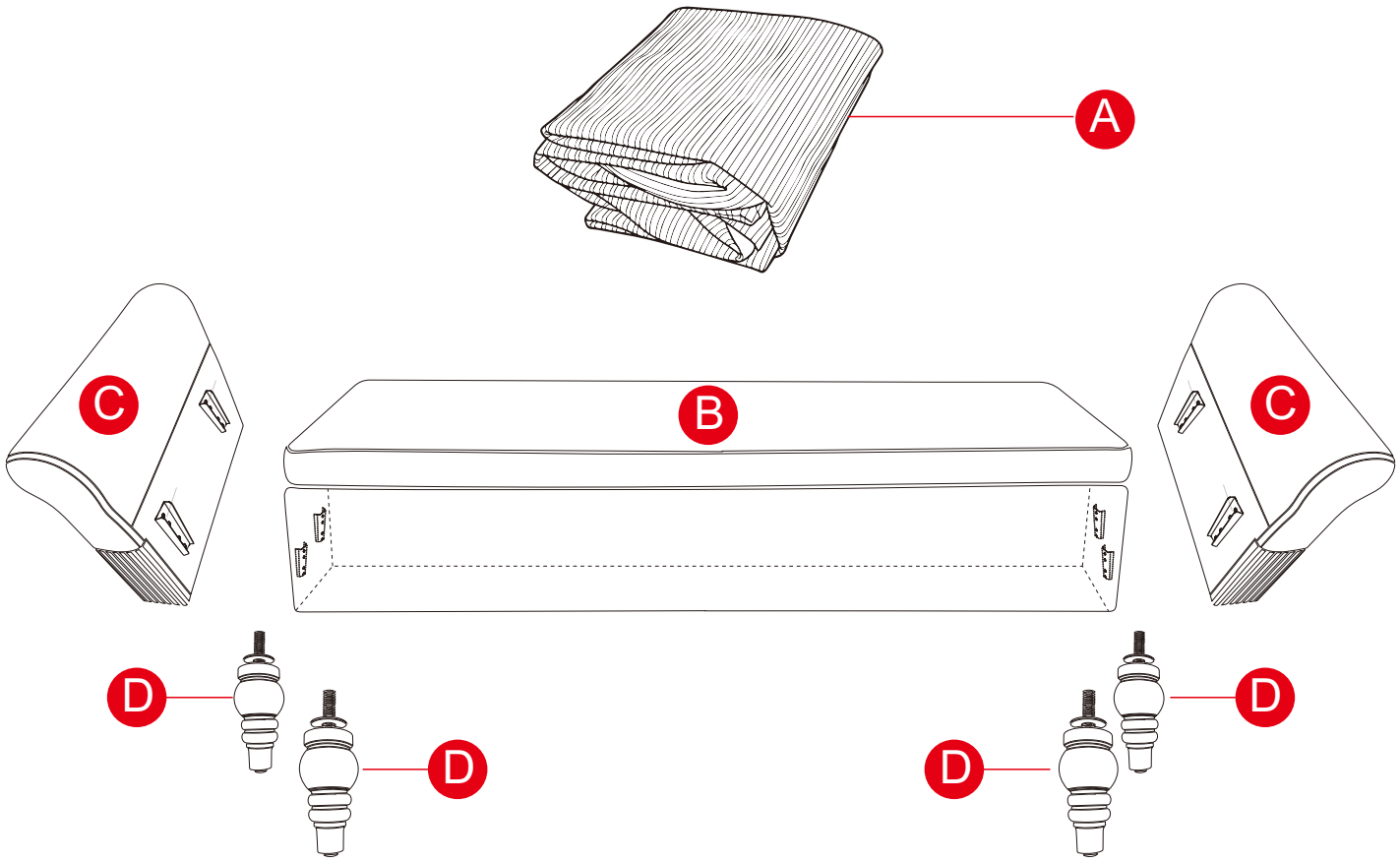

Parts List

A x1

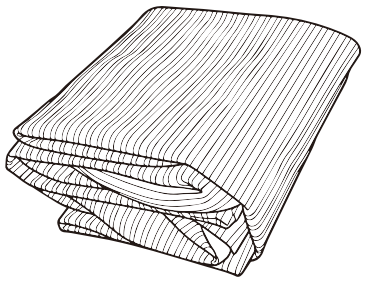

Sofa cover

B x1

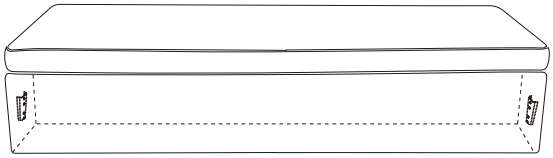

Seat cushion

C x2

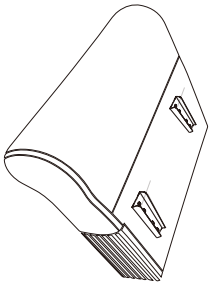

Arms

D x4



Legs

Assembly Instructions

Step 1

First, put Seat cushion B on a clean cloth, then open the top . cover and take out the Legs D, Armrests C,and cushion cover A from inside

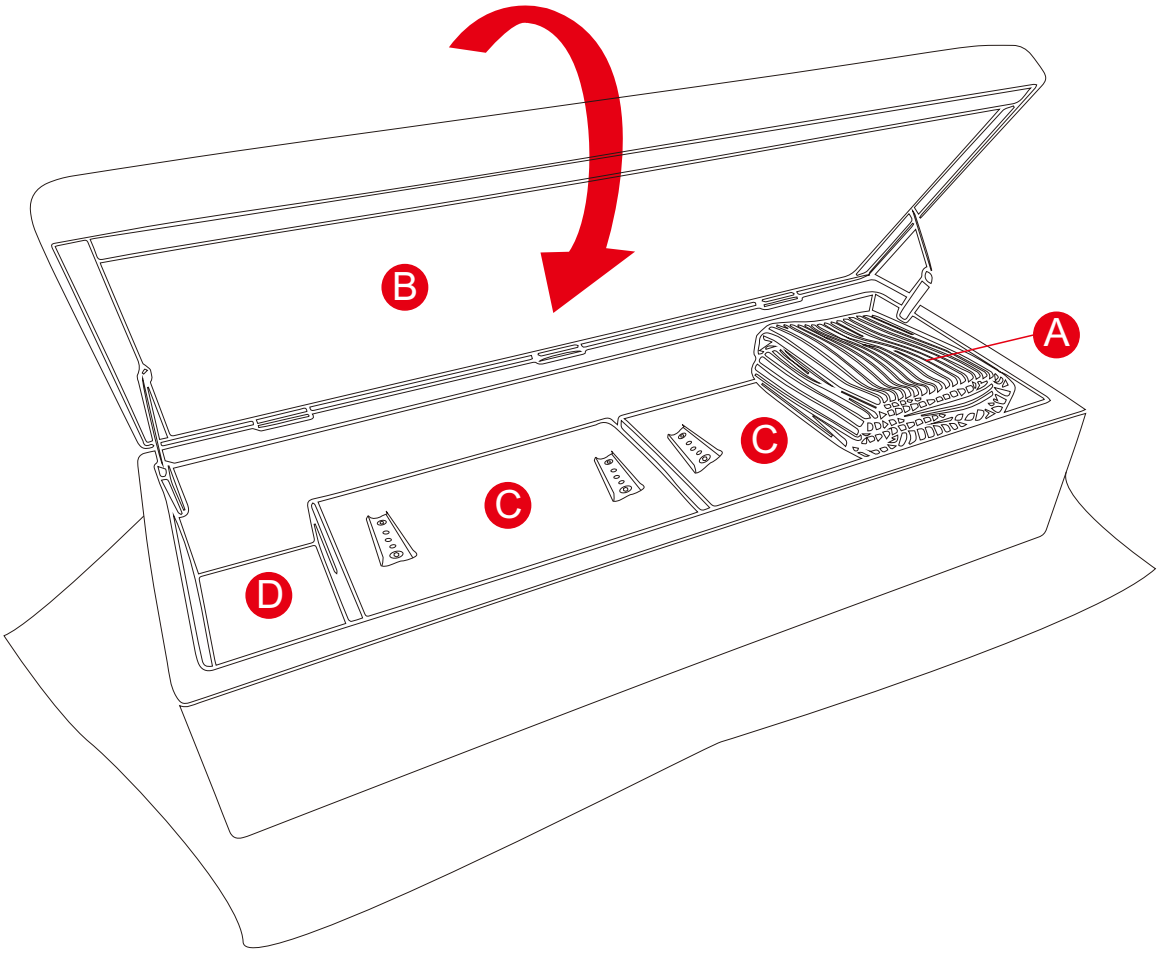

Step 2

Lift the Seat cushion B and align it with the slot on the Armrest C, then insert it.

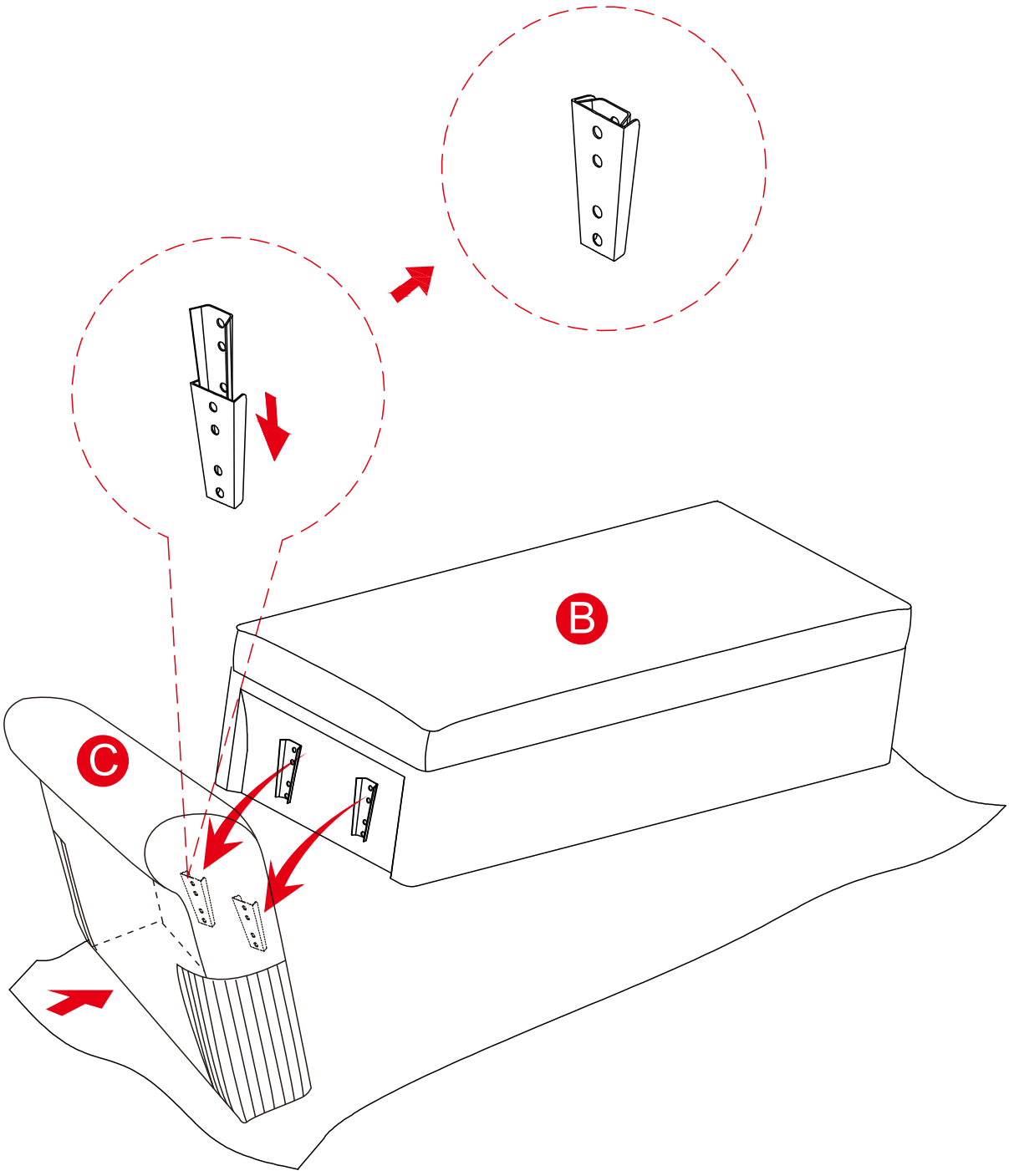

Step 3

Install one side of the Armrest, then lift the other side of the Seat cushion B and insert it into the Armrest C slot.

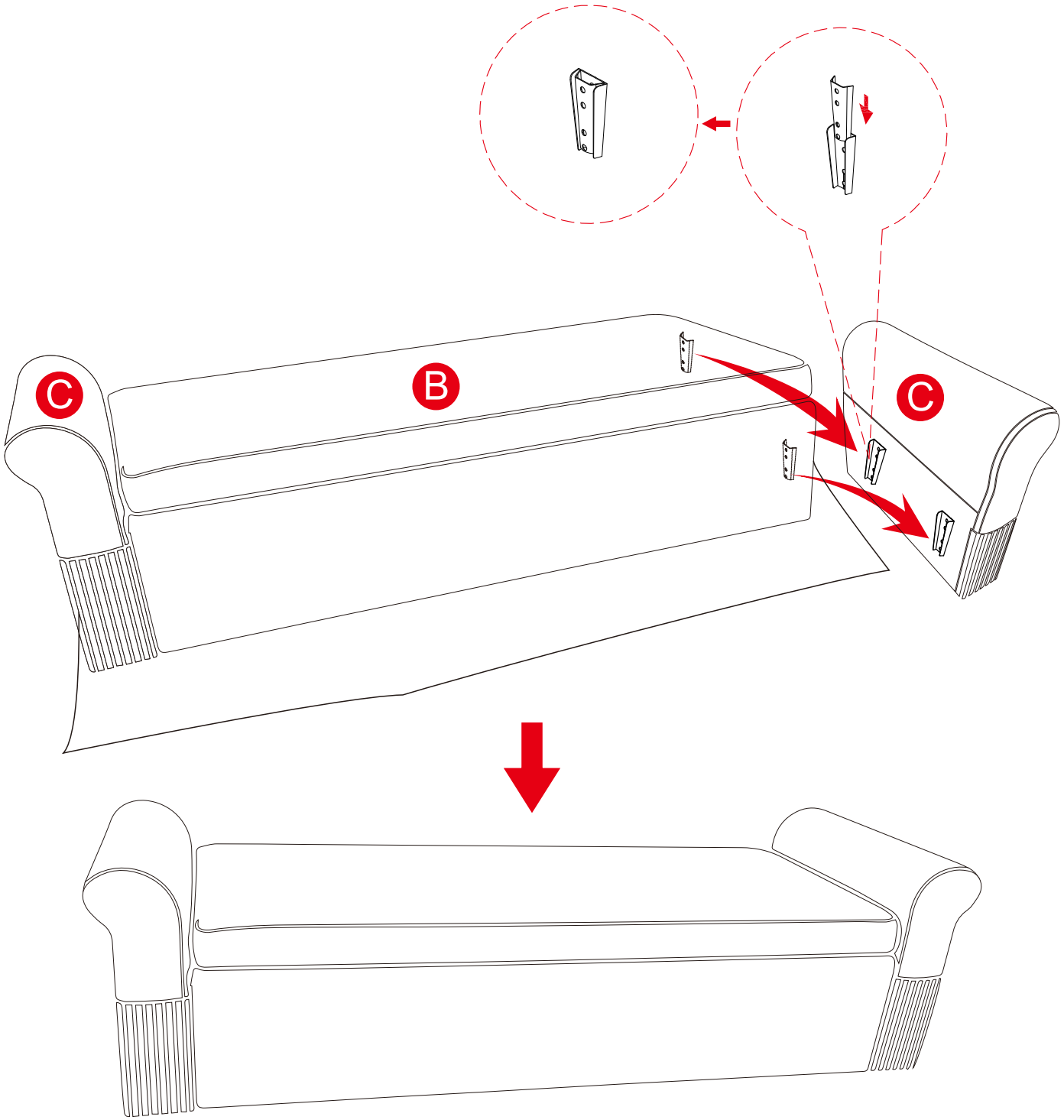

Step 4

Flip the seat over, then align Legs D with the hole on the bottom of the seat and tighten it by turning in the direction of the arrow.

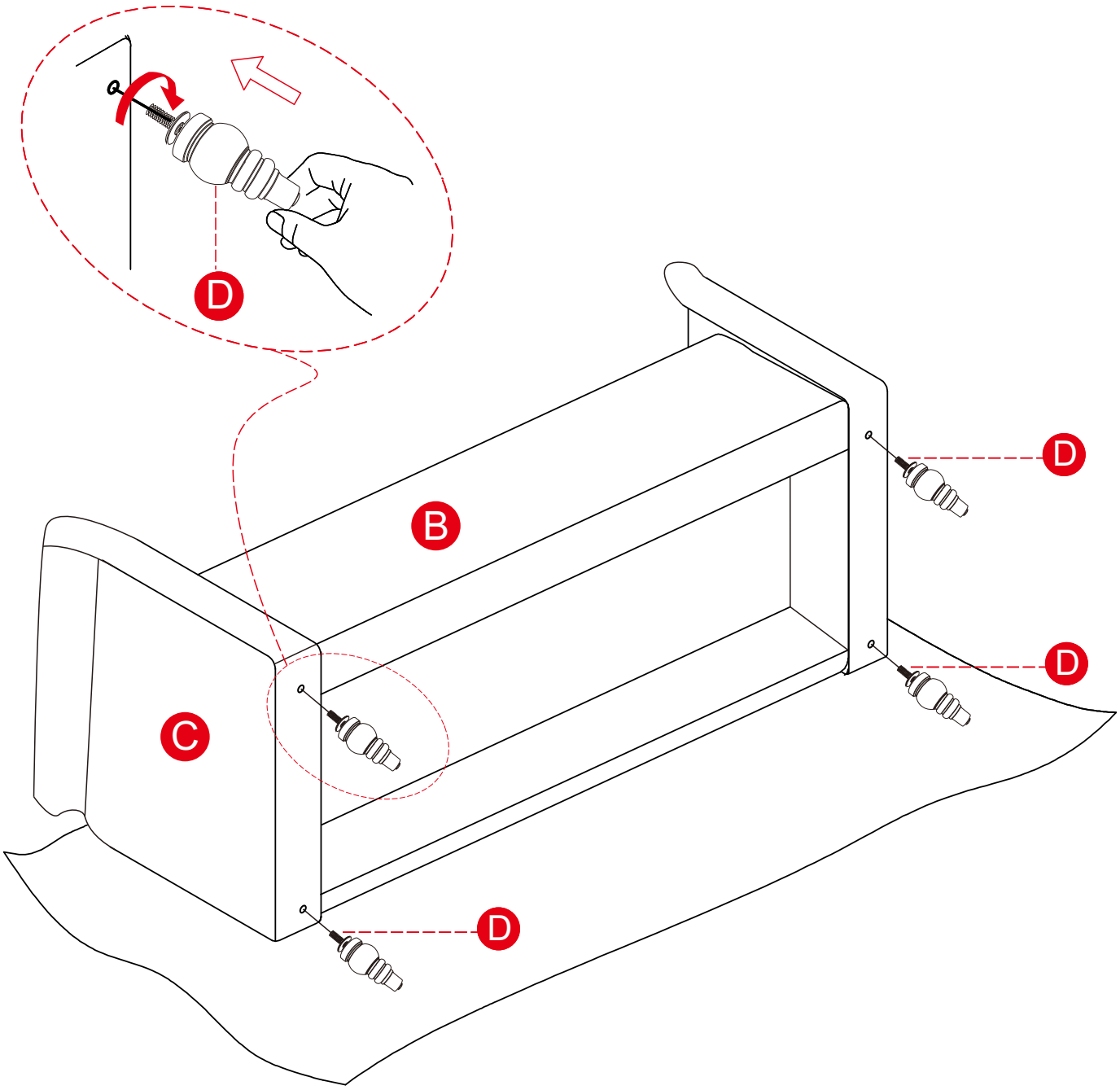

Step 5

Open the Seat cushion B cover

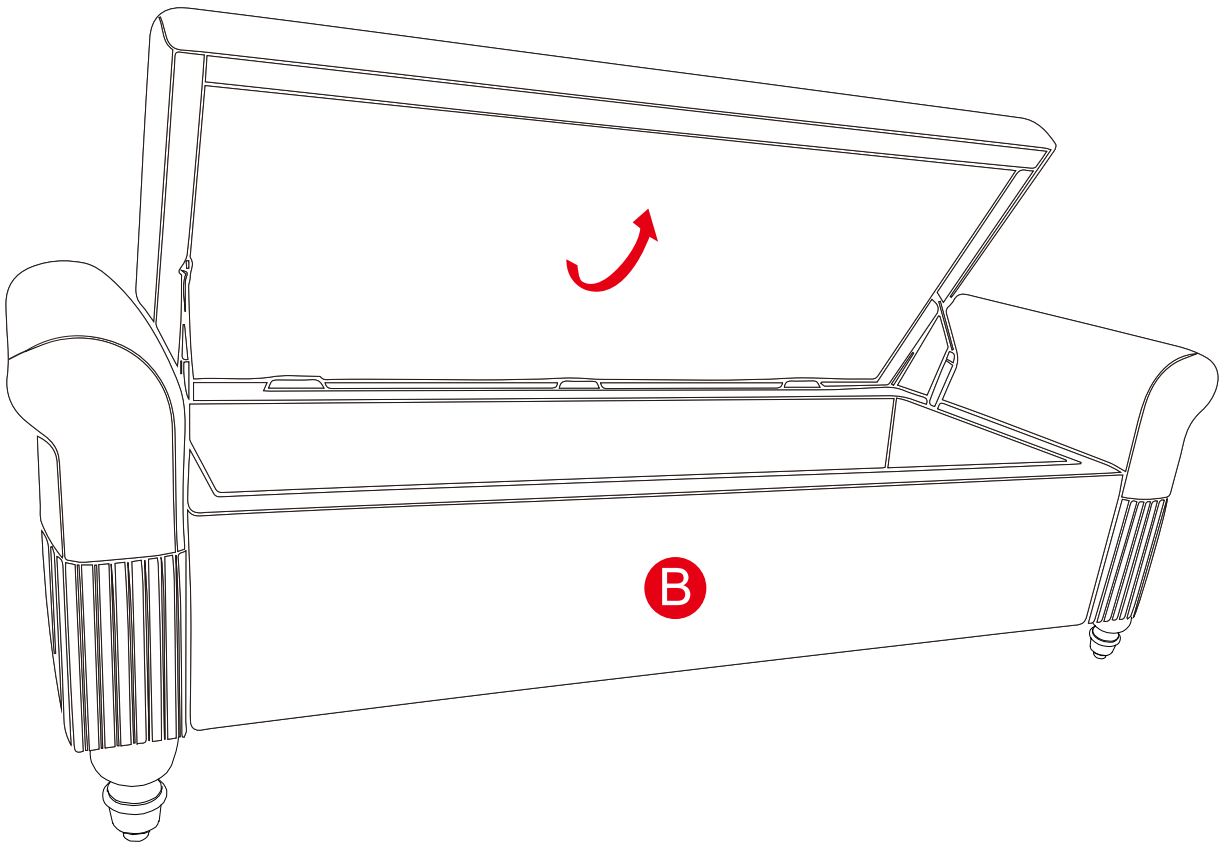

Step 6

Two people, one on each side, putting the sofa cover A onto the sofa.

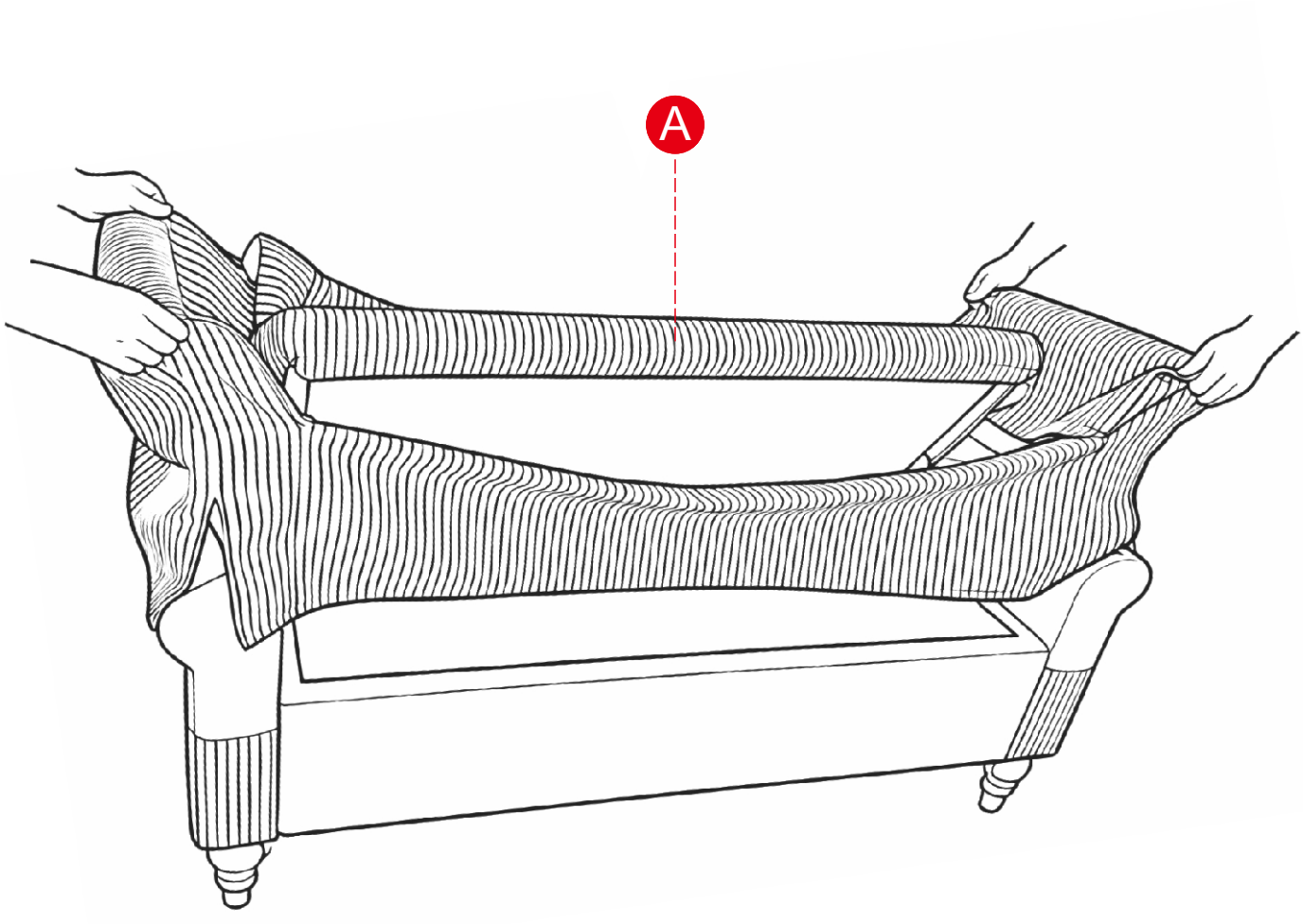

Step 7

Completed.

