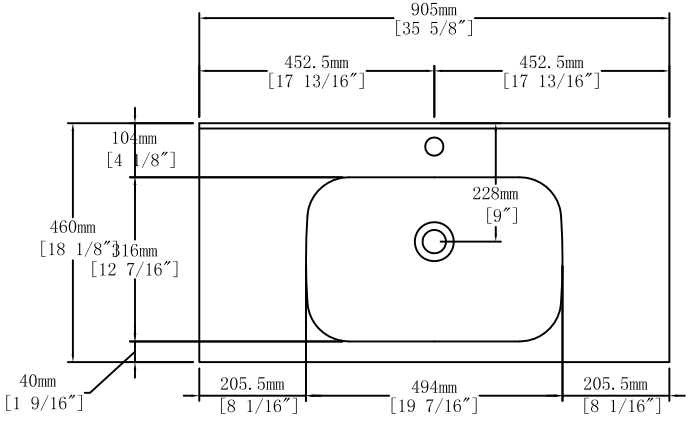

Top View

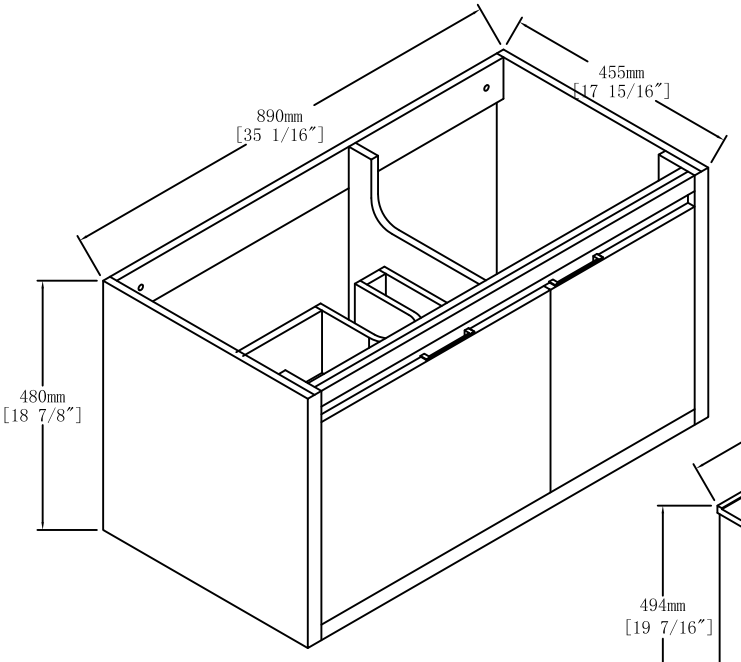

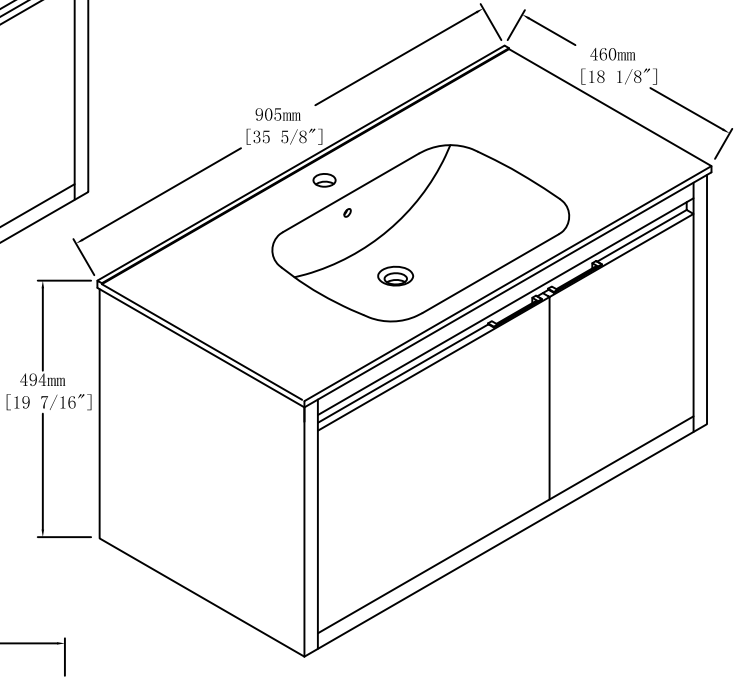

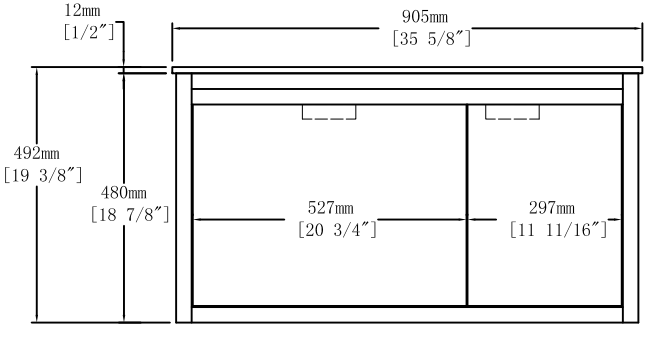

Front View

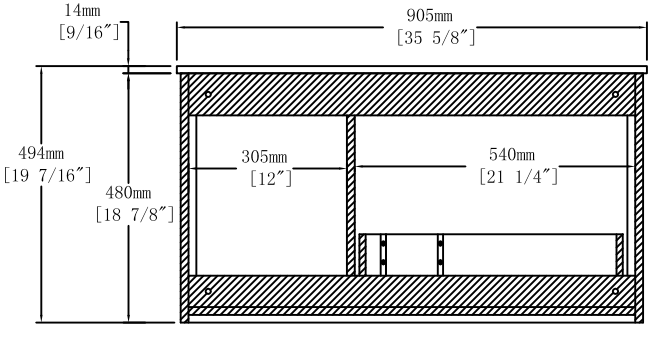

Front View