1.Turn off the power.

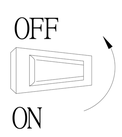

2.Unscrew two nuts (F)on the canopy(E).

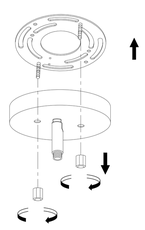

Accessories:

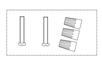

3.Open the lamp frame (I) into 6 equal parts, untie the wires.

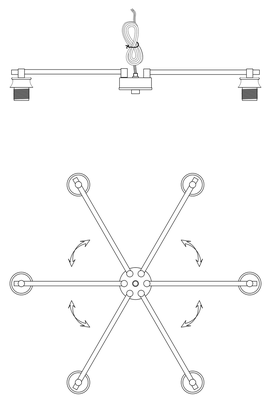

4.Twist the tubes(G)(H) from the bottom up, when twisting the tubes, the wires should pass through each tube (The last straight tube does not include the node), and then tighten the canopy(E).

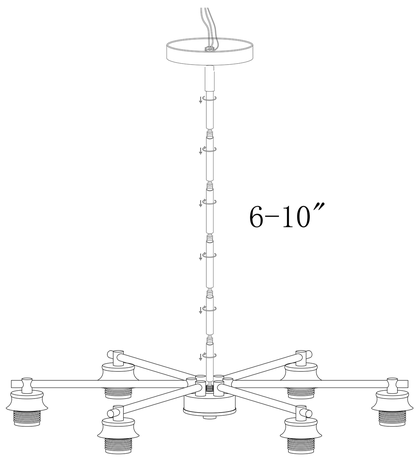

5.Install the mounting plate (D) with two screws (B) on the junction box (A).

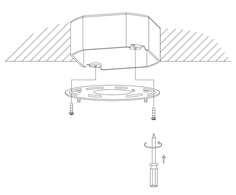

6.Positive pole, negative pole, and the ground wire should all be connected to the wires correspondingly, and then the electrical tape wrapped with the wires and the wiring caps(C).

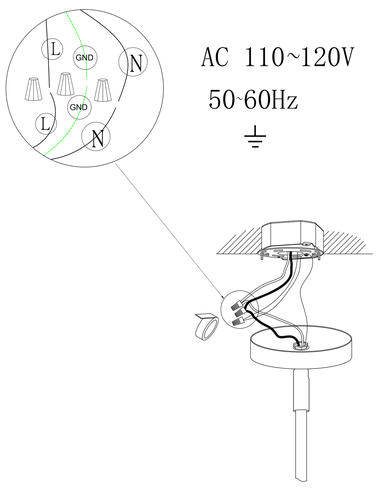

AC 110~120V

50~60Hz

⏚

7.Lift the whole lamp upward, fix the screws in the two holes of the canopy (E), tighten the nuts (F), and hang up the lamp.

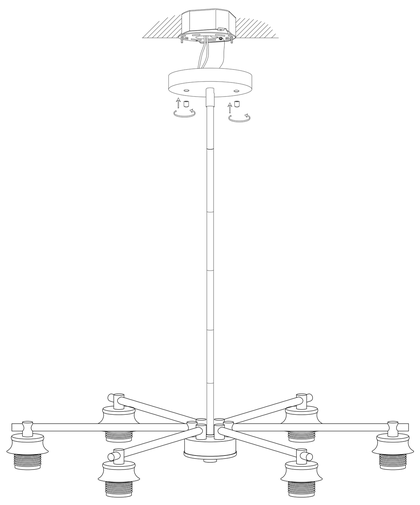

8.The holes of the glass shade (J) are aligned with the lamp holder, and tighten them with the loops(K).

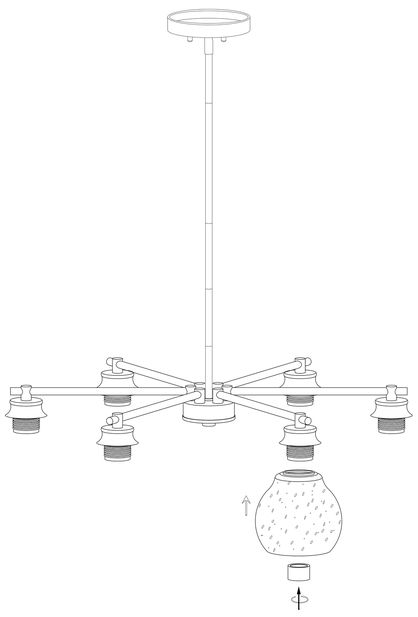

9.Install the bulbs (L)(Not included).

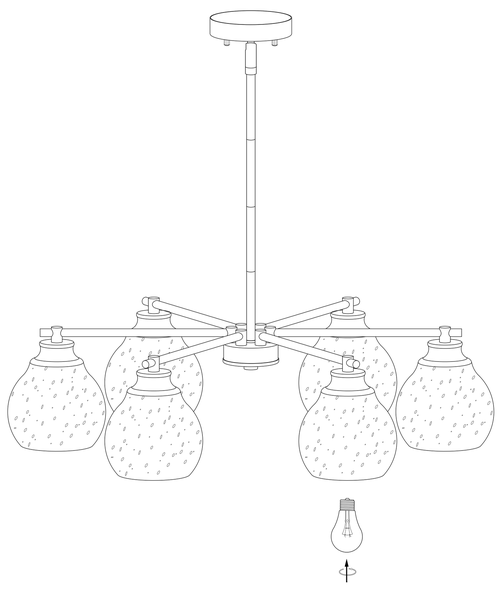

E26 6*MAX 60W

10.Finished, turn on the light.

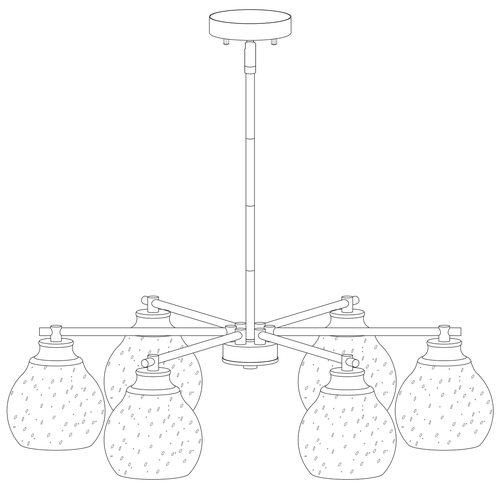

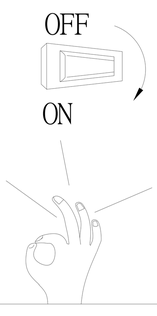

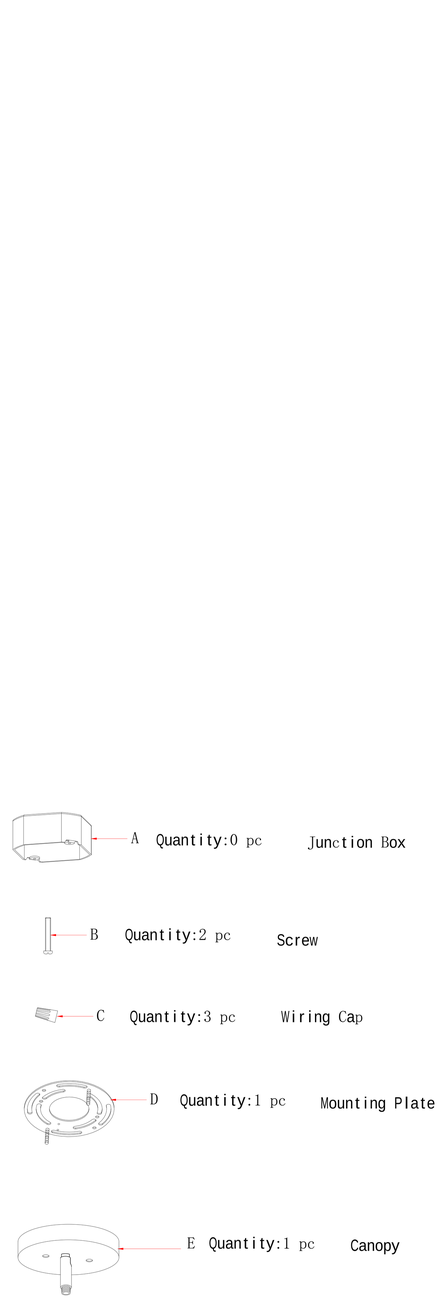

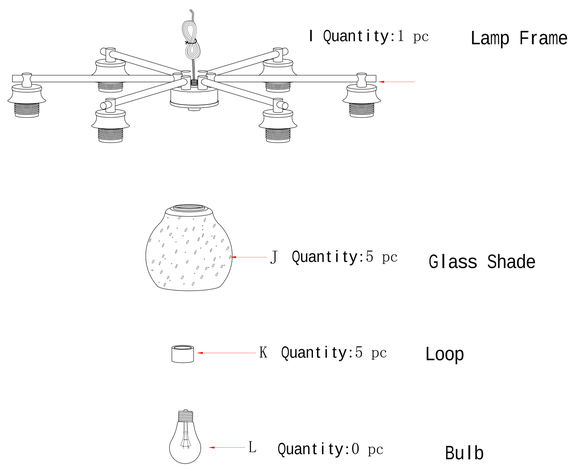

Notice:

This light fixture shoud be installed in accordance with all applicable, local installation codes, and by a person familiar with the construction and operation of it, as well as the hazards involved. Inspect items and contents carefully. If any damage or defect is found, do not install it.