Assembly Drawing & Parts List

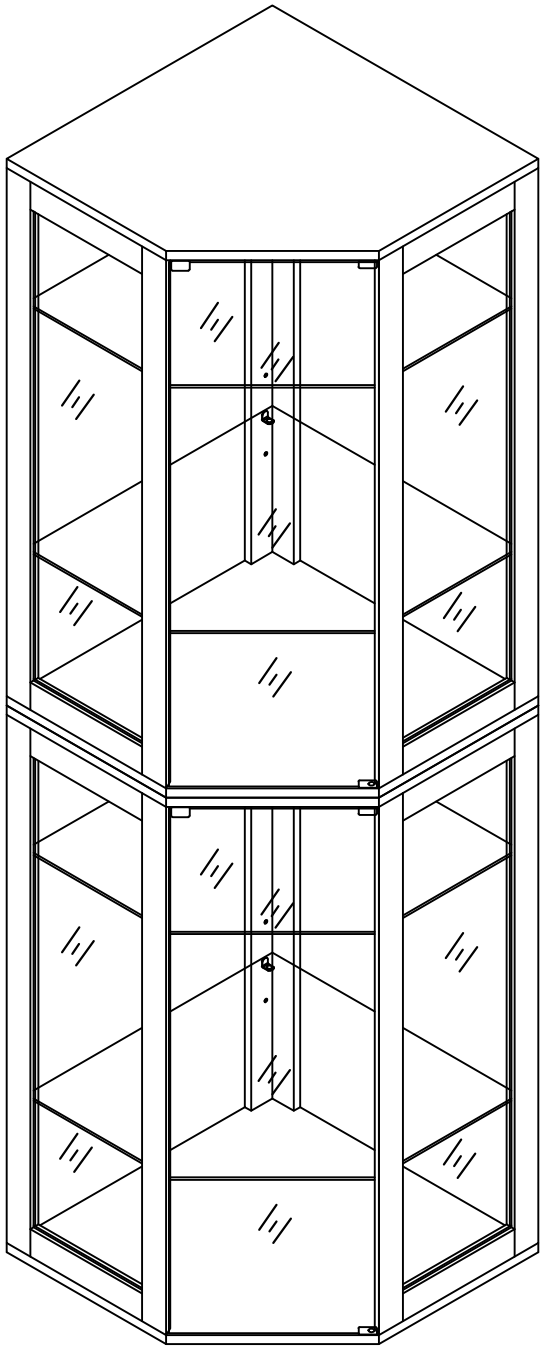

CORNER GLASS TALL CABINT
JC-012

PACKAGE INCLUDE

STRUCTURE FOR REFERENCE TO ASSEMBLY

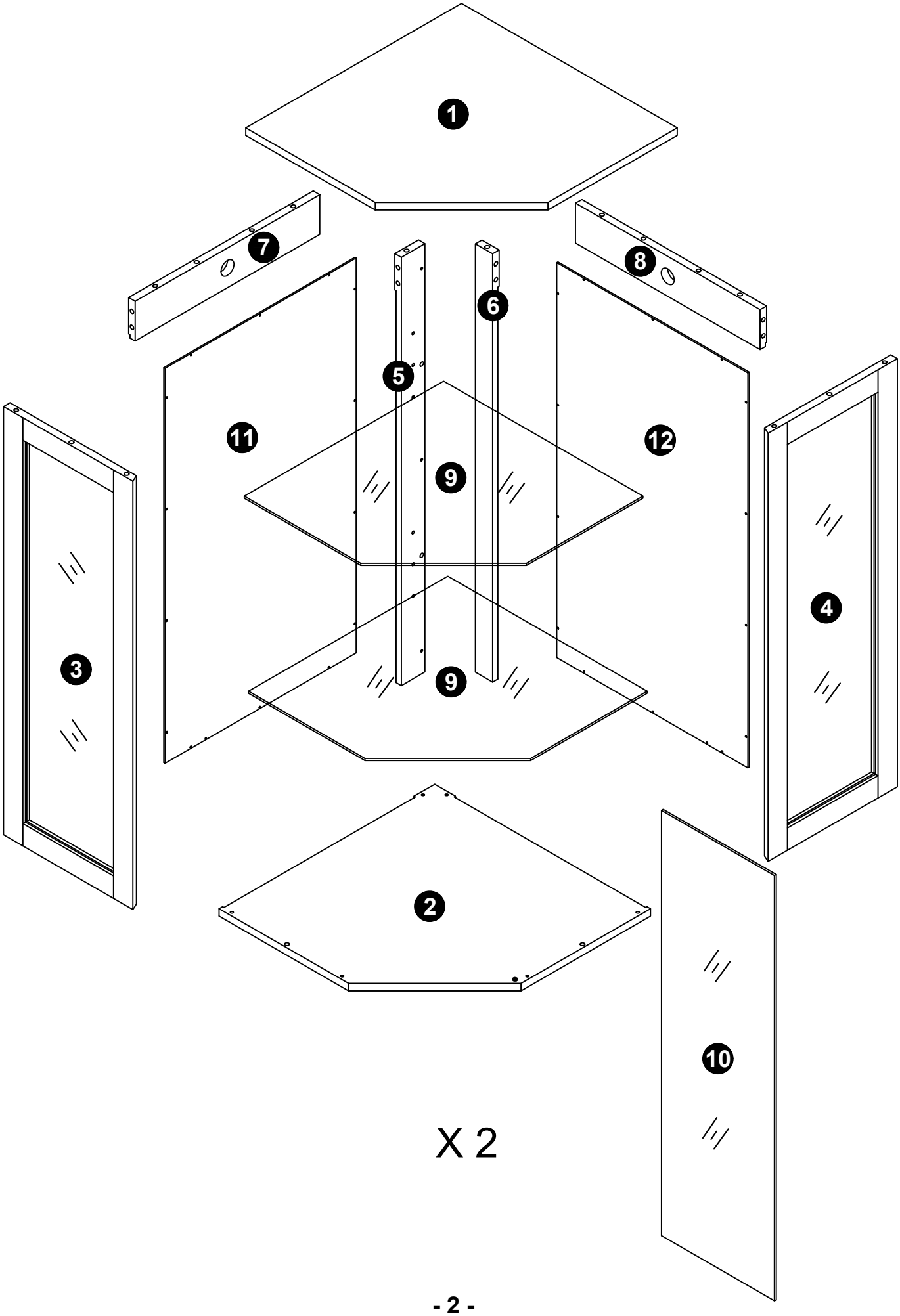

PART IDENTIFICATION

A x 40+1	B x 40+1	C x 28+1	D x 6
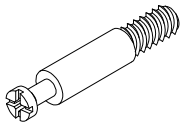	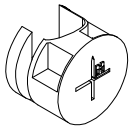	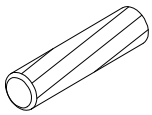	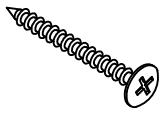
Ø6*34mm	Ø15*10mm	Ø8*30mm	Ø4*25mm

E x 8	F x 56+1	G x 2	H x 20
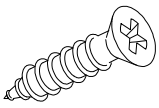	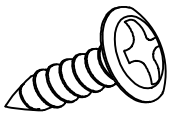	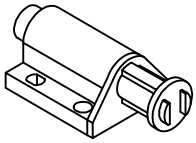	
Ø3*12mm	Ø3.5*12mm		

I x 2	J x 2	K x 2	L x 2
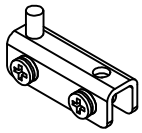	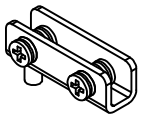	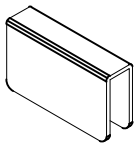	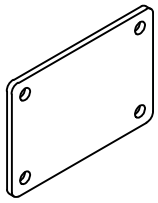

M x 2	N x 2	O x 16	P x 2
 M1 M2 M3	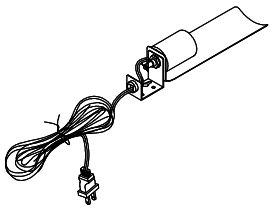		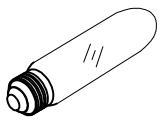

Q x 12
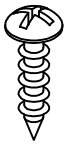
Ø3*12mm

STEP 1

C x 4
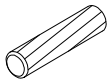
Ø8*30mm
D x 6

Ø4*25mm

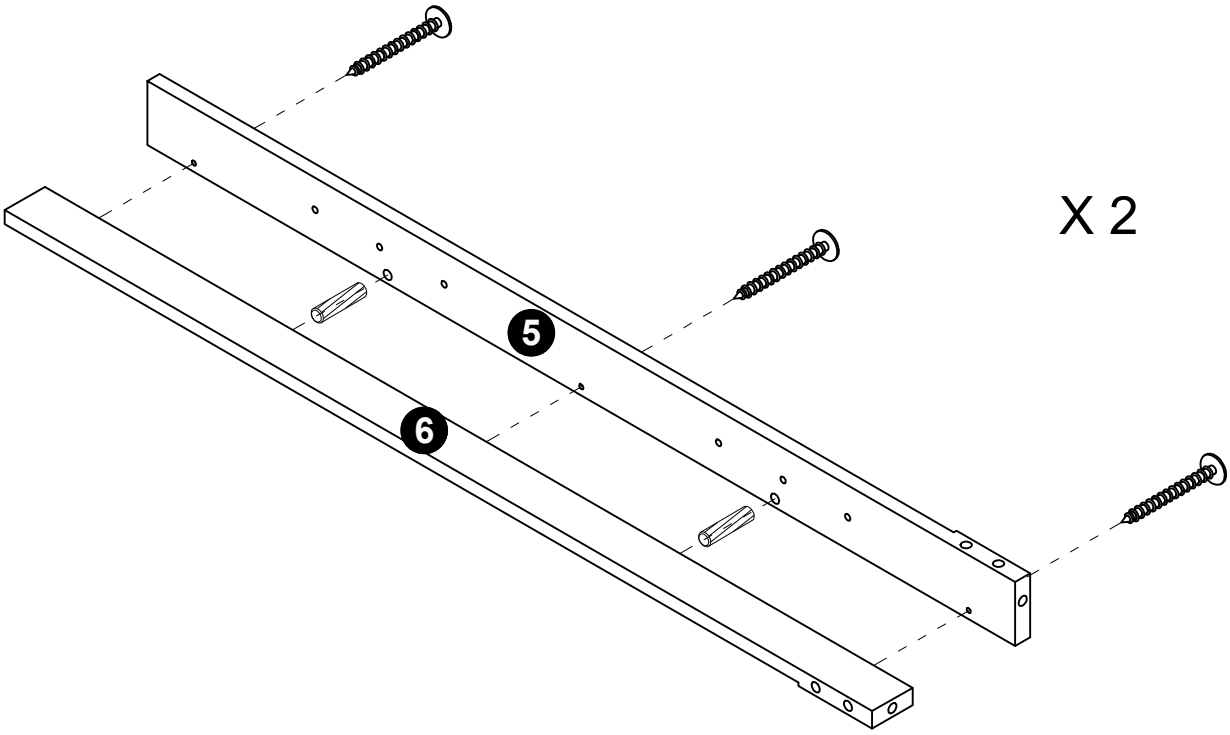

X 2

STEP 2

A x 4

Ø6*34mm

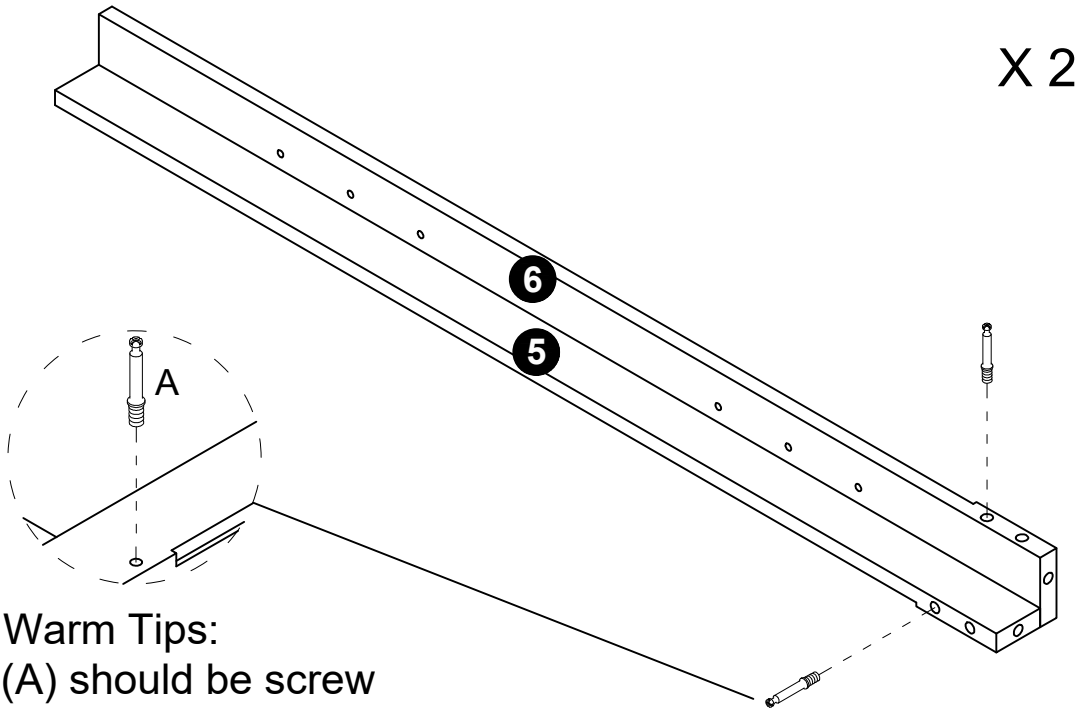

X 2

Warm Tips:
(A) should be screw
to the small holes.

STEP 3

B x 2

Ø15*10mm
C x 2
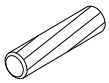
Ø8*30mm

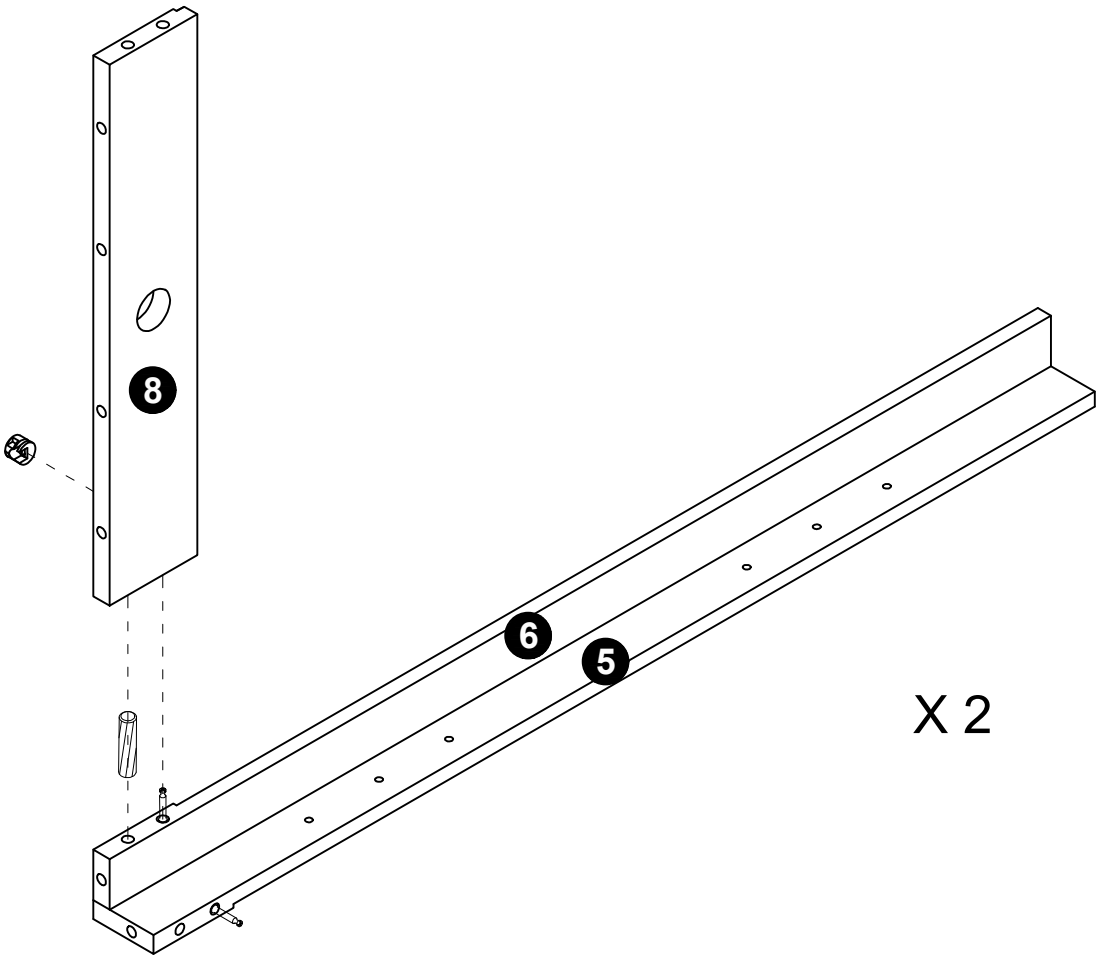

X 2

STEP 4

A x 4

Ø6*34mm

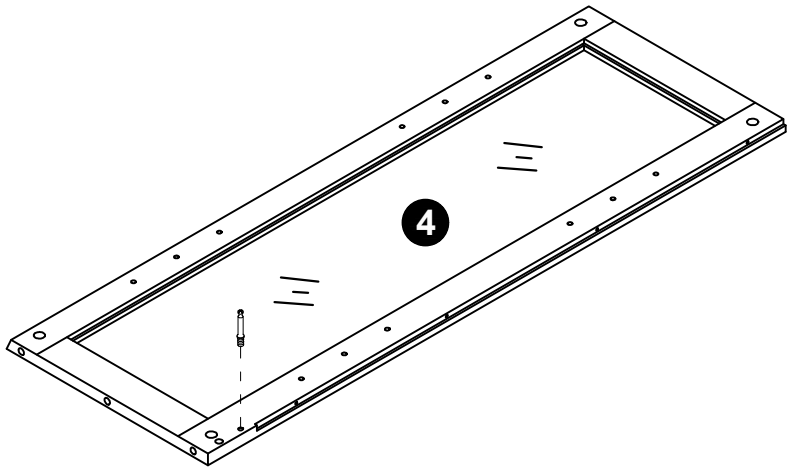

X 2

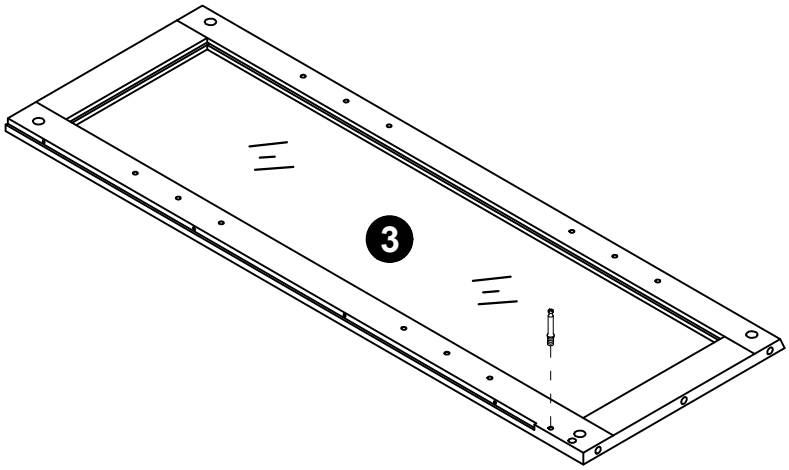

STEP 5

B x 2

Ø15*10mm
C x 2
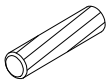
Ø8*30mm

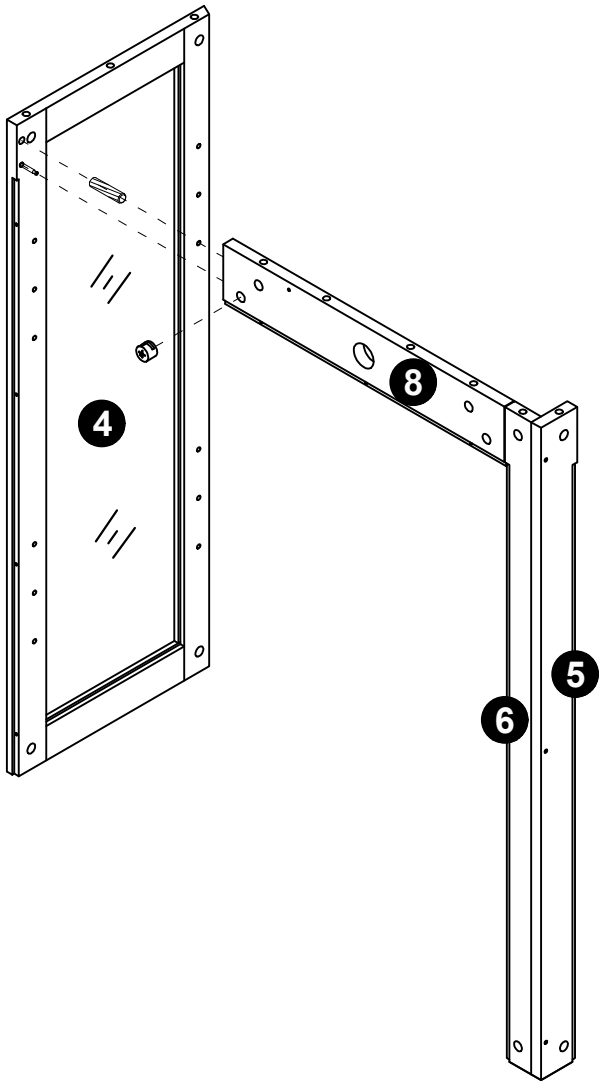

X 2

STEP 6

A x 12

Ø6*34mm

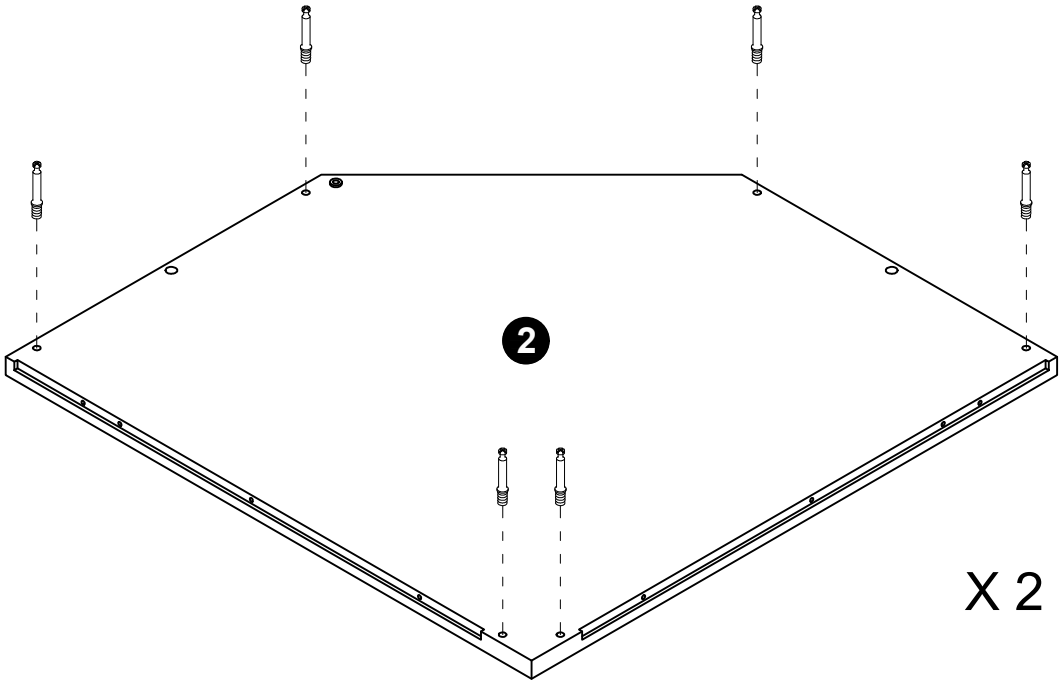

X 2

STEP 7

B x 8

Ø15*10mm
C x 2
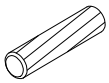
Ø8*30mm

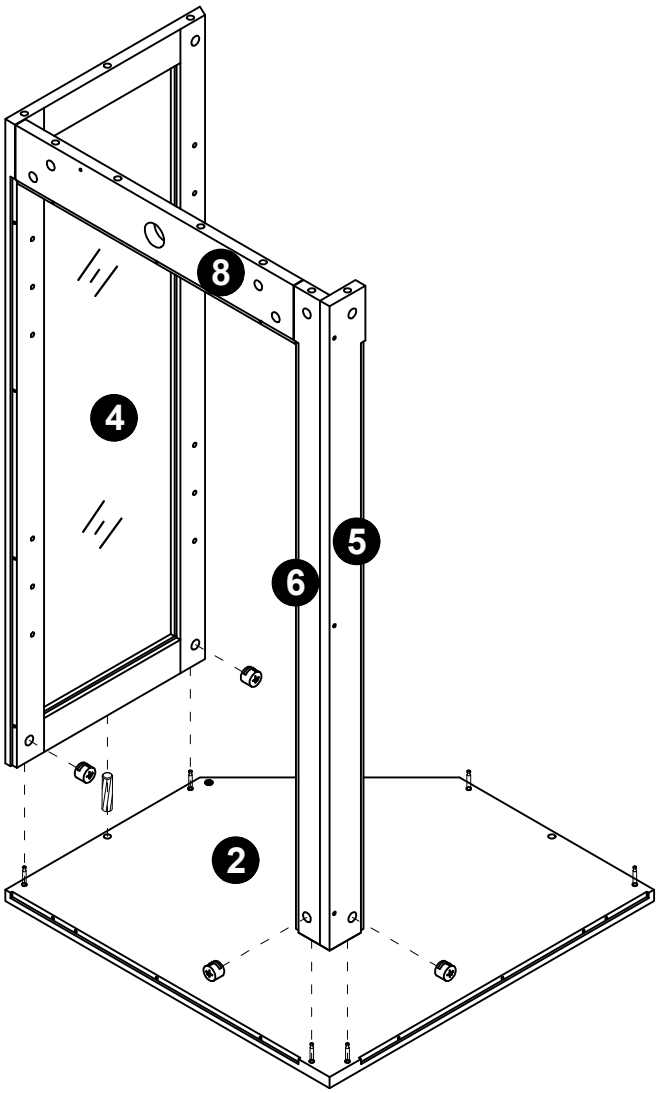

X 2

STEP 8

B x 2

Ø15*10mm
C x 2
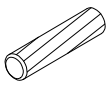
Ø8*30mm

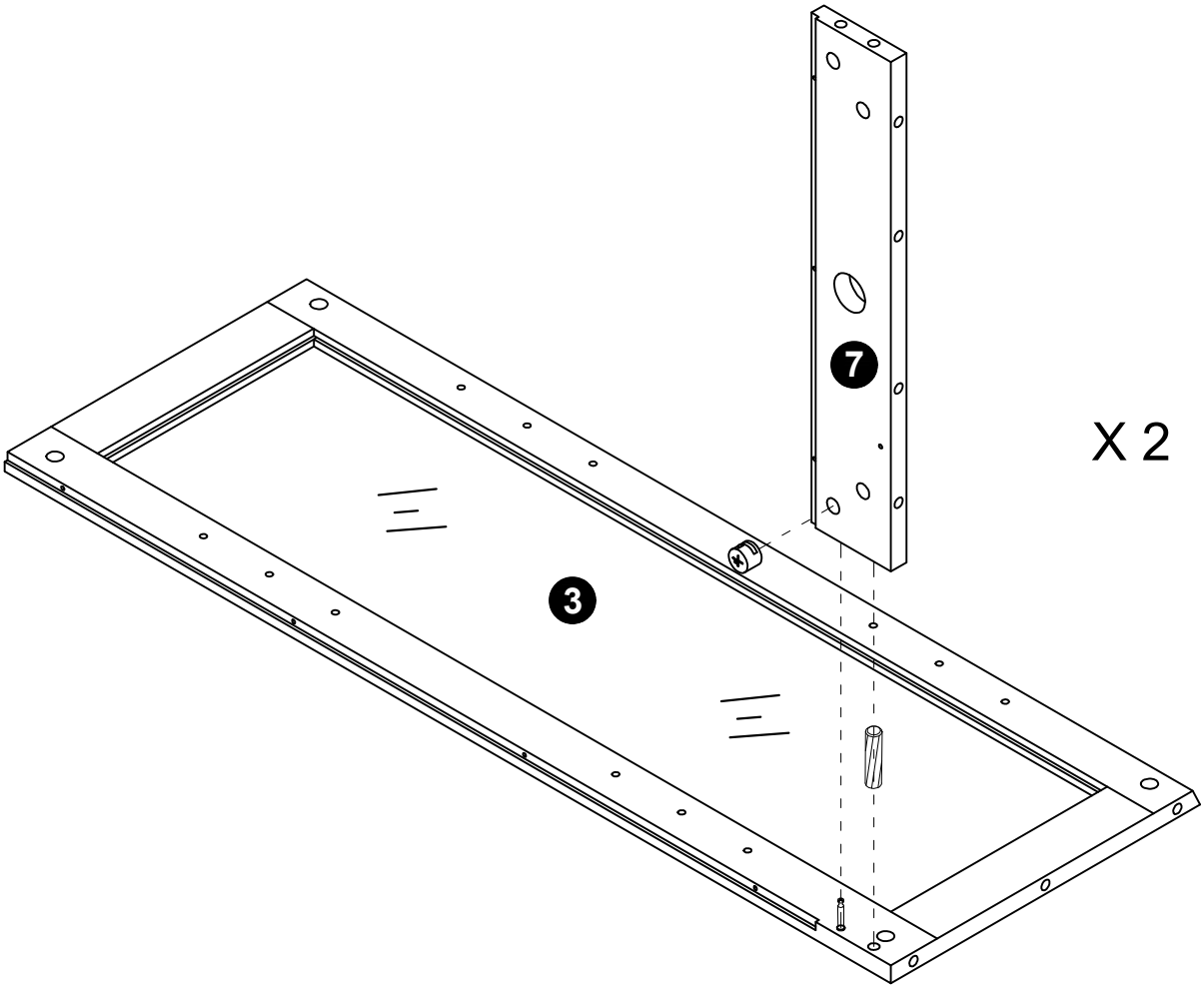

X 2

STEP 9

B x 6

Ø15*10mm
C x 4
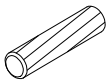
Ø8*30mm

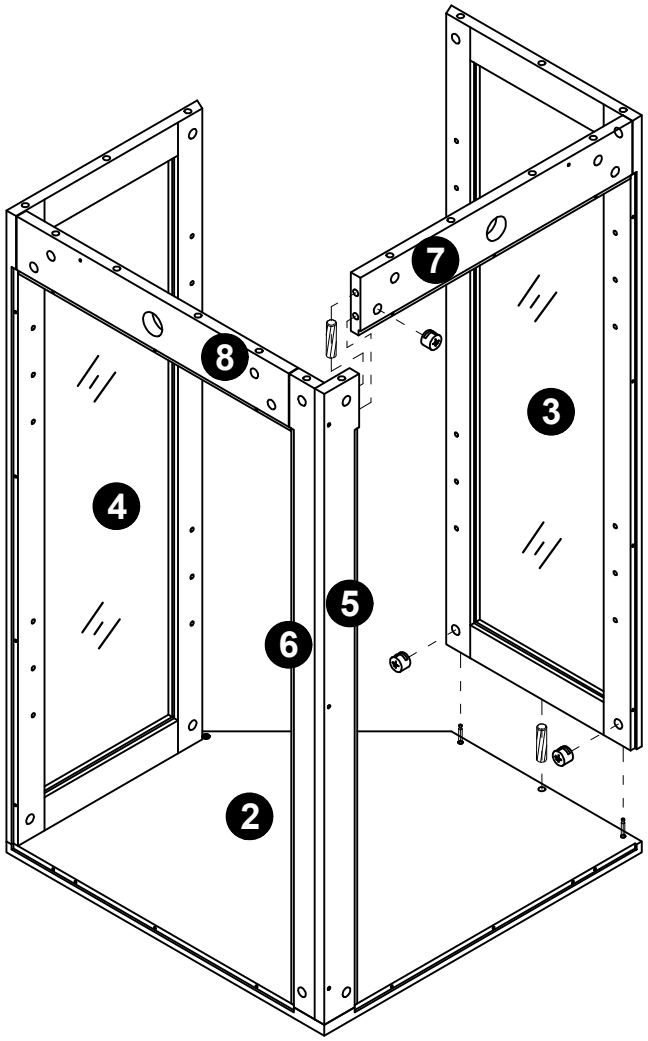

X 2

STEP 10

A x 20

Ø6*34mm

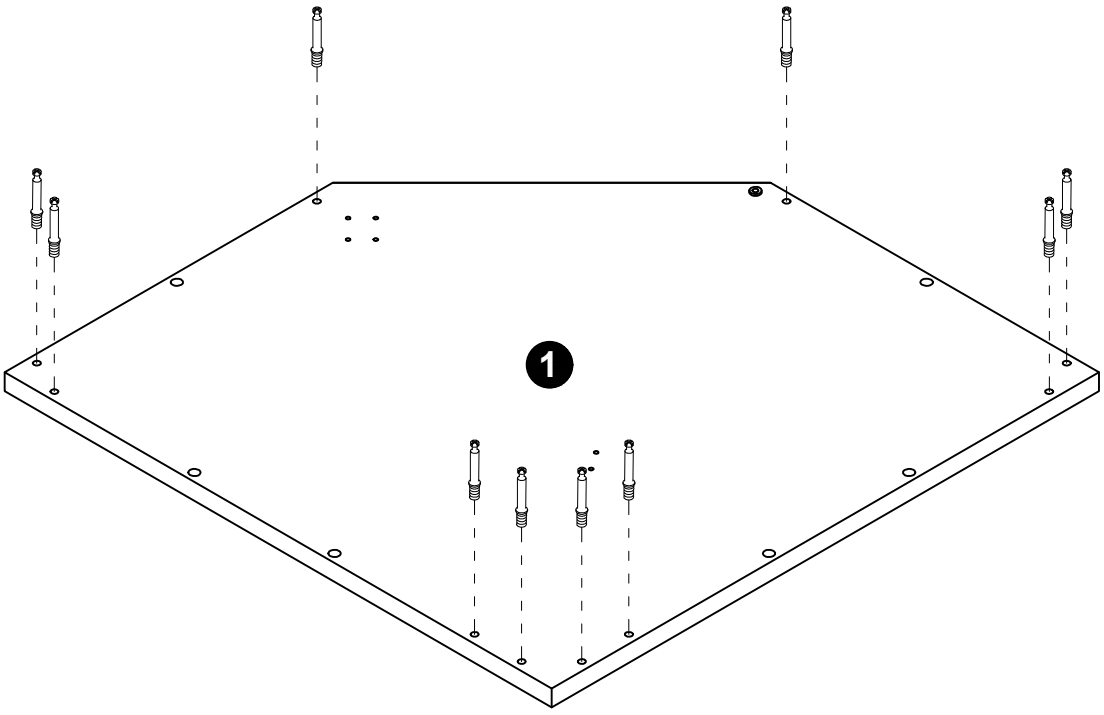

X 2

STEP 11

Q x 8
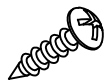
Ø3*12mm
G x 2
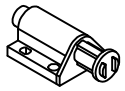

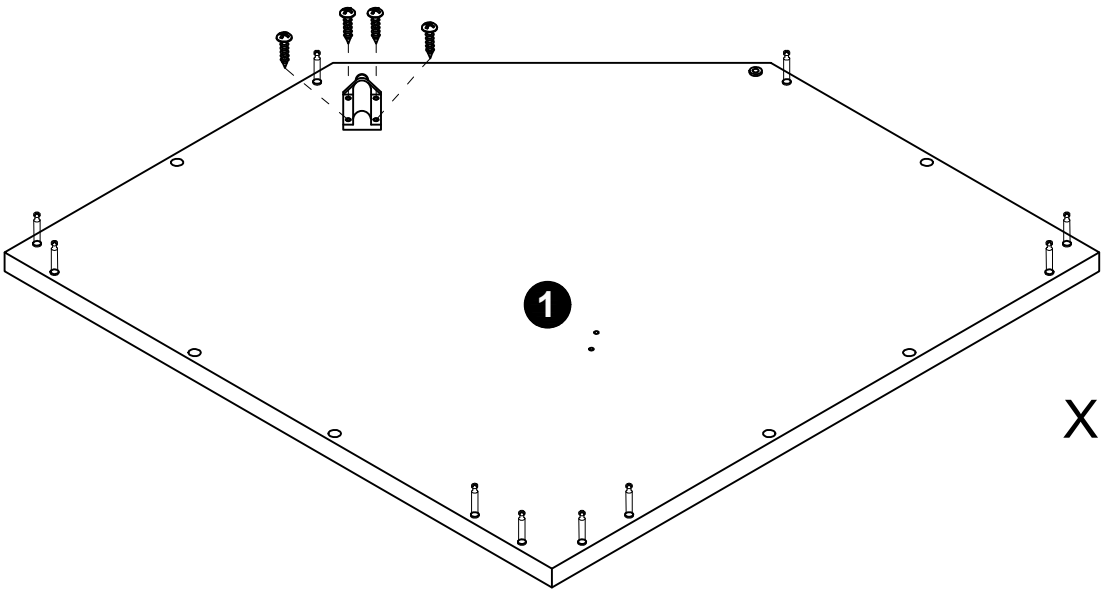

X 2

STEP 12

Q x 4
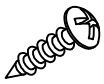
Ø3*12mm
N x 2

P x 2


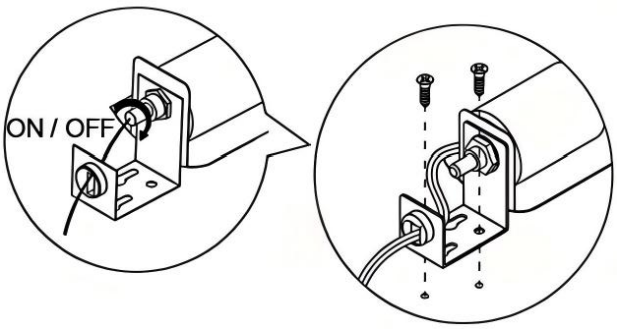

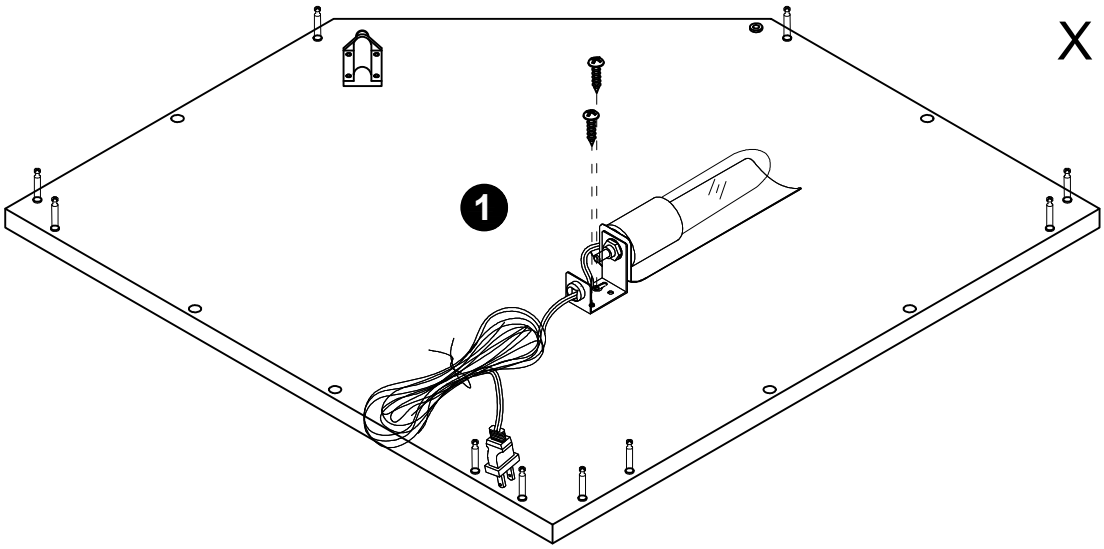

X 2

STEP 13

B x 20

Ø15*10mm
C x 12
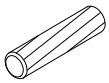
Ø8*30mm

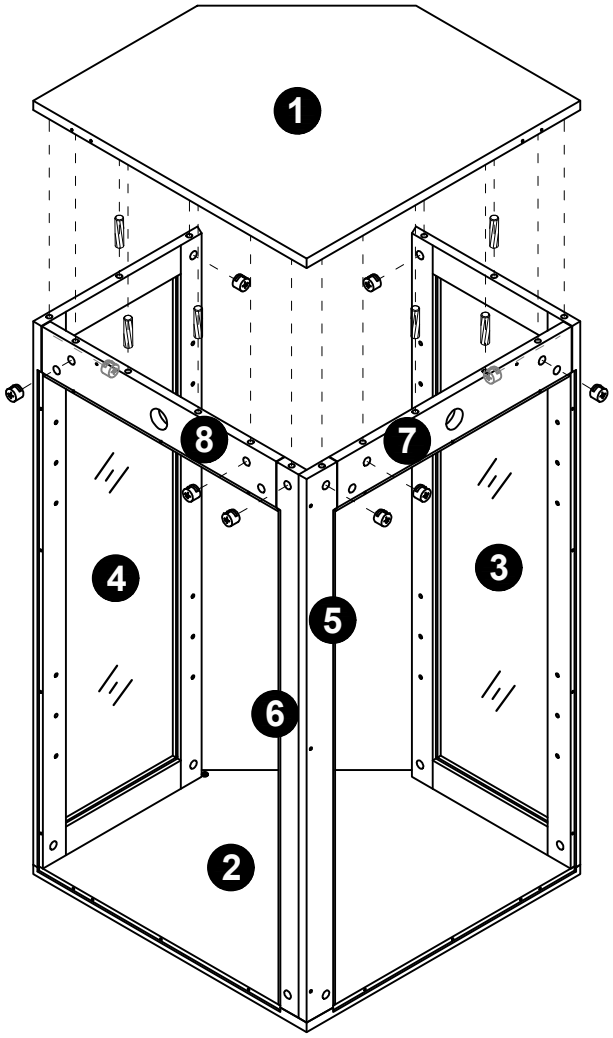

X 2

STEP 14

F x 28

Ø3.5*12mm
M x 2

M1

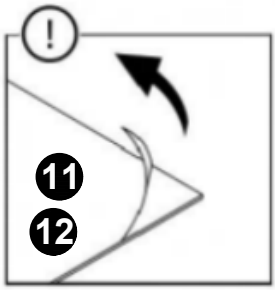

Remove protective film on the mirror panel.

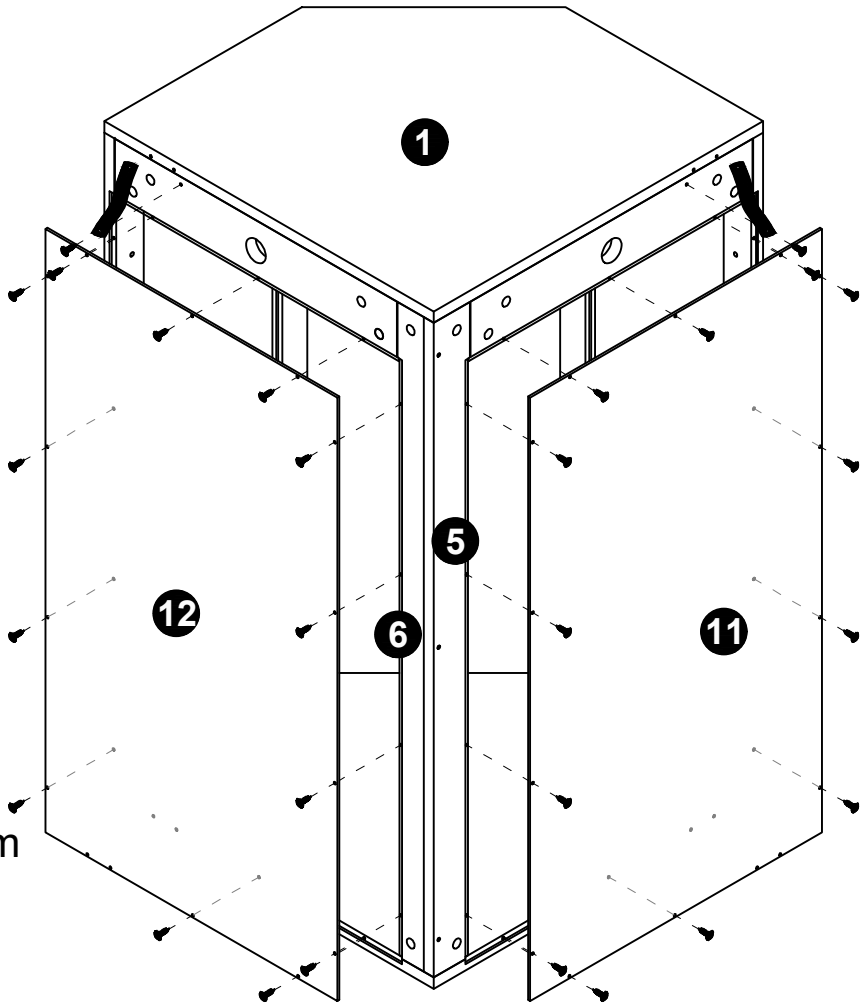

STEP 15

F x 28

Ø3.5*12mm

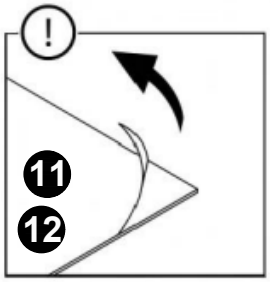

Remove protective film on the mirror panel.

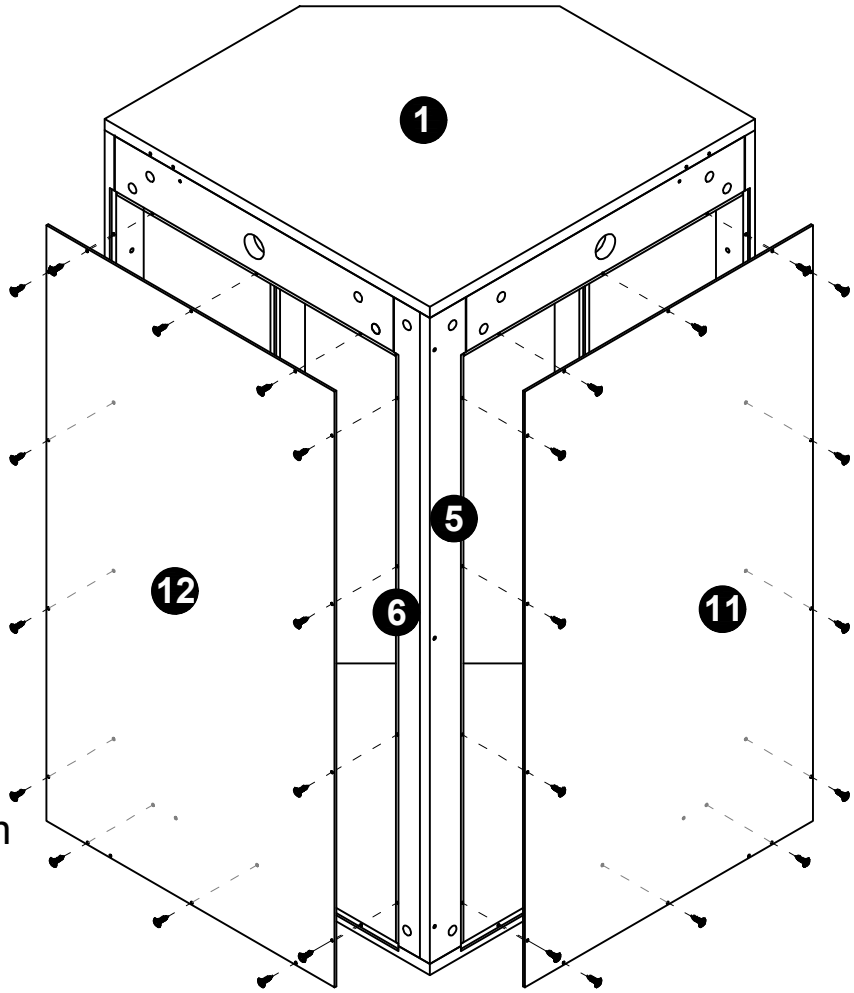

STEP 16

O x 16


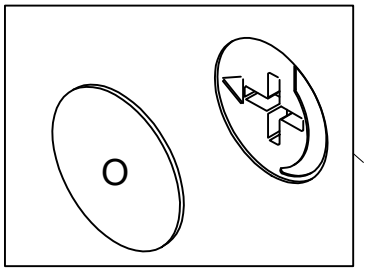

In order to make the product more beautiful

Please paste hard ware O on the exposed holes

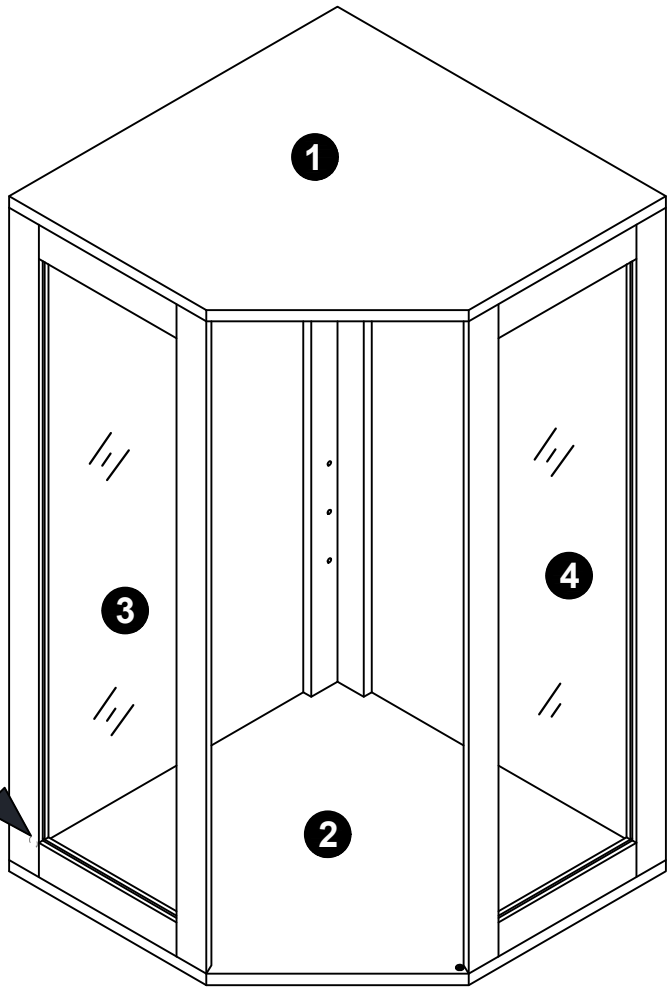

X 2

STEP 17

H x 20



X 2

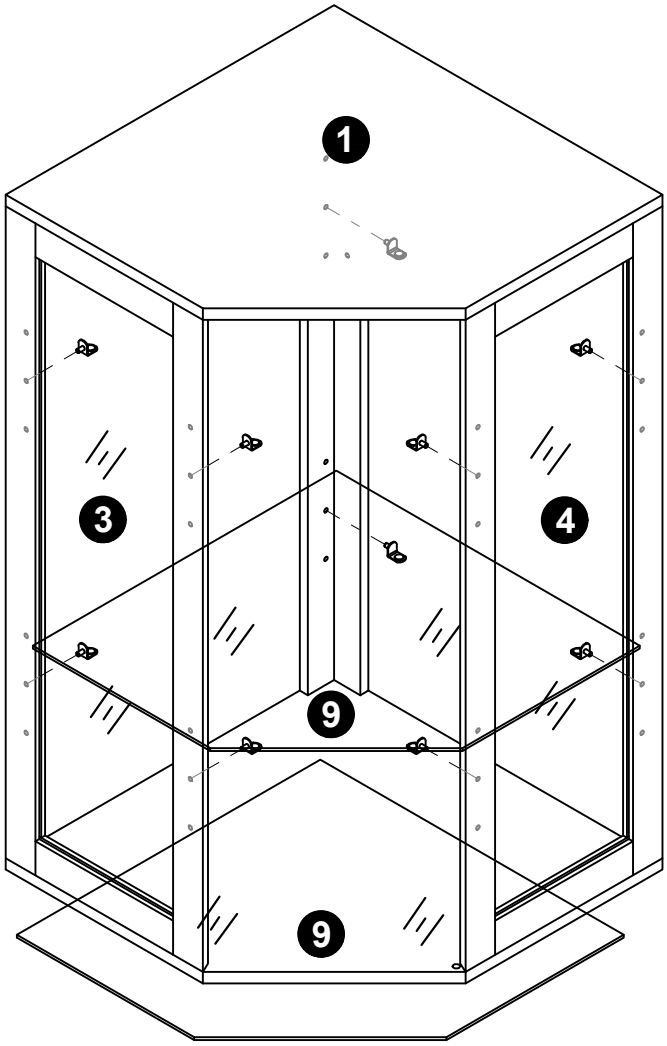

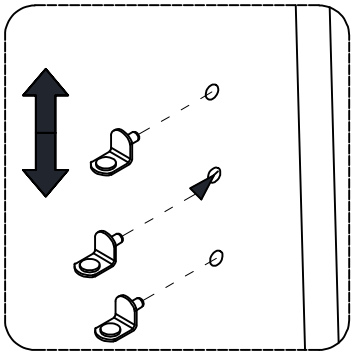

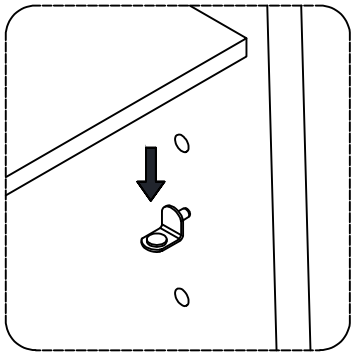

STEP 18

I x 2

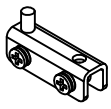

J x 2

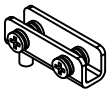

K x 2

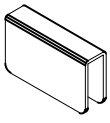

X 2

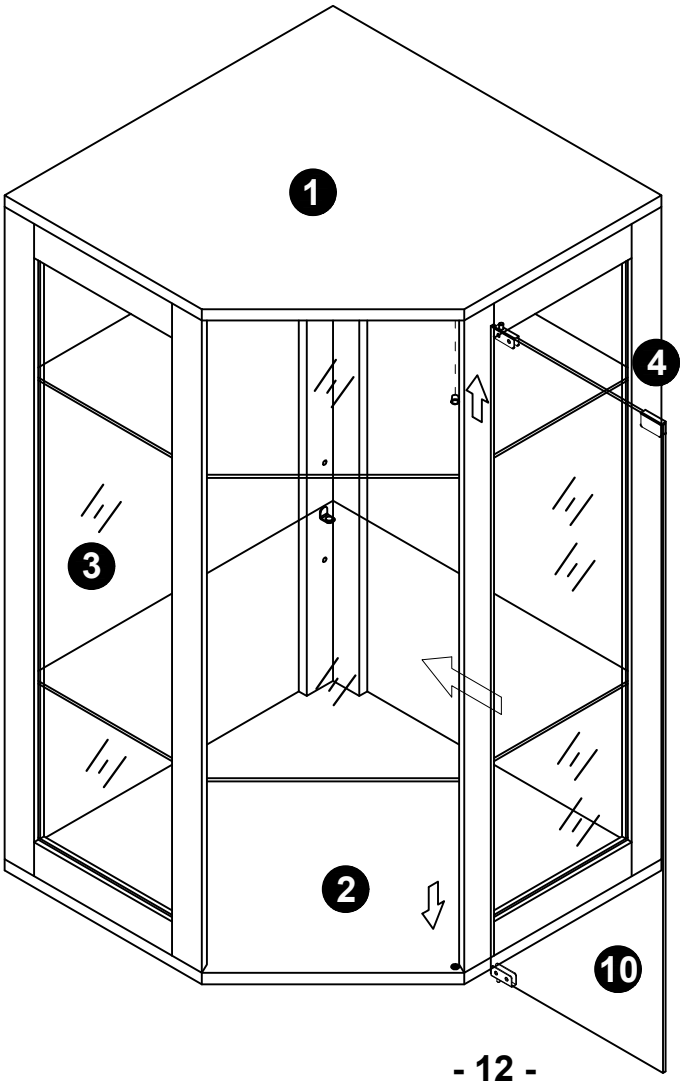

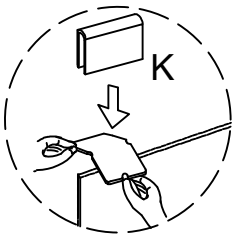

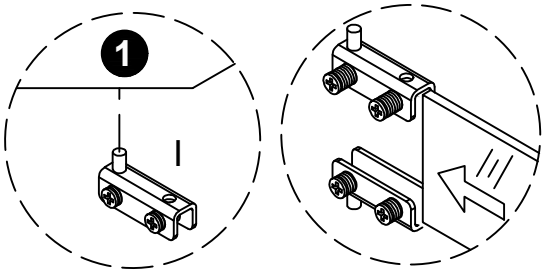

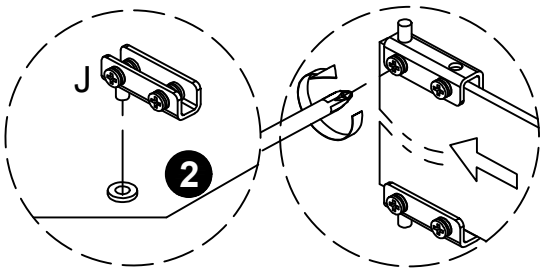

STEP 19

E x 8

Ø3*12mm
L x 2
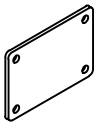
M x 2
 M2 M3

