Installation Instruction

Please don't tighten the screws completely and go back later for a final tightening of all the screws after pieces are aligned with each other.

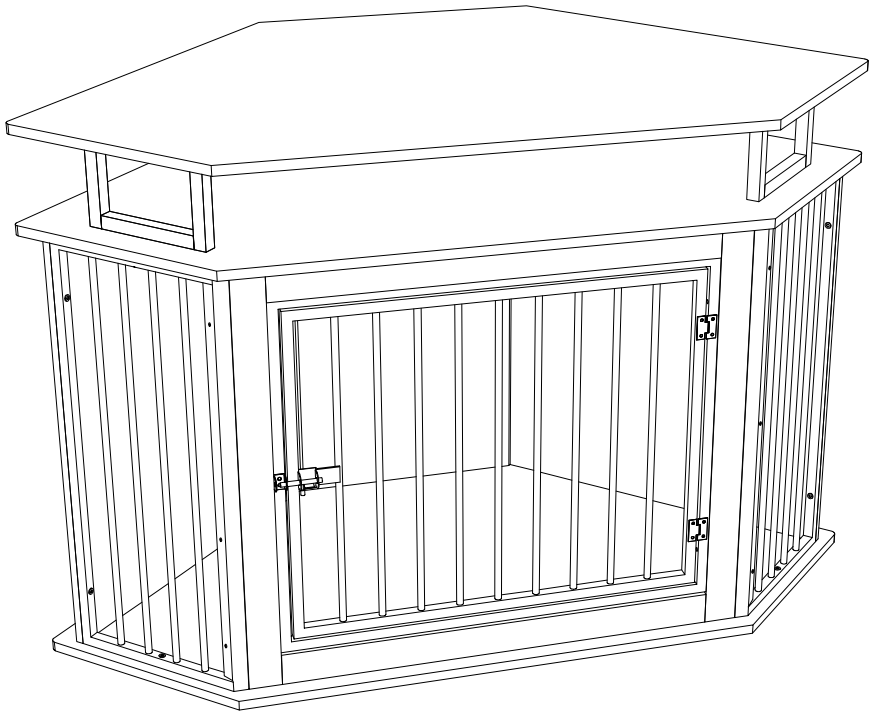

MADE IN CHINA

Explosion Diagram

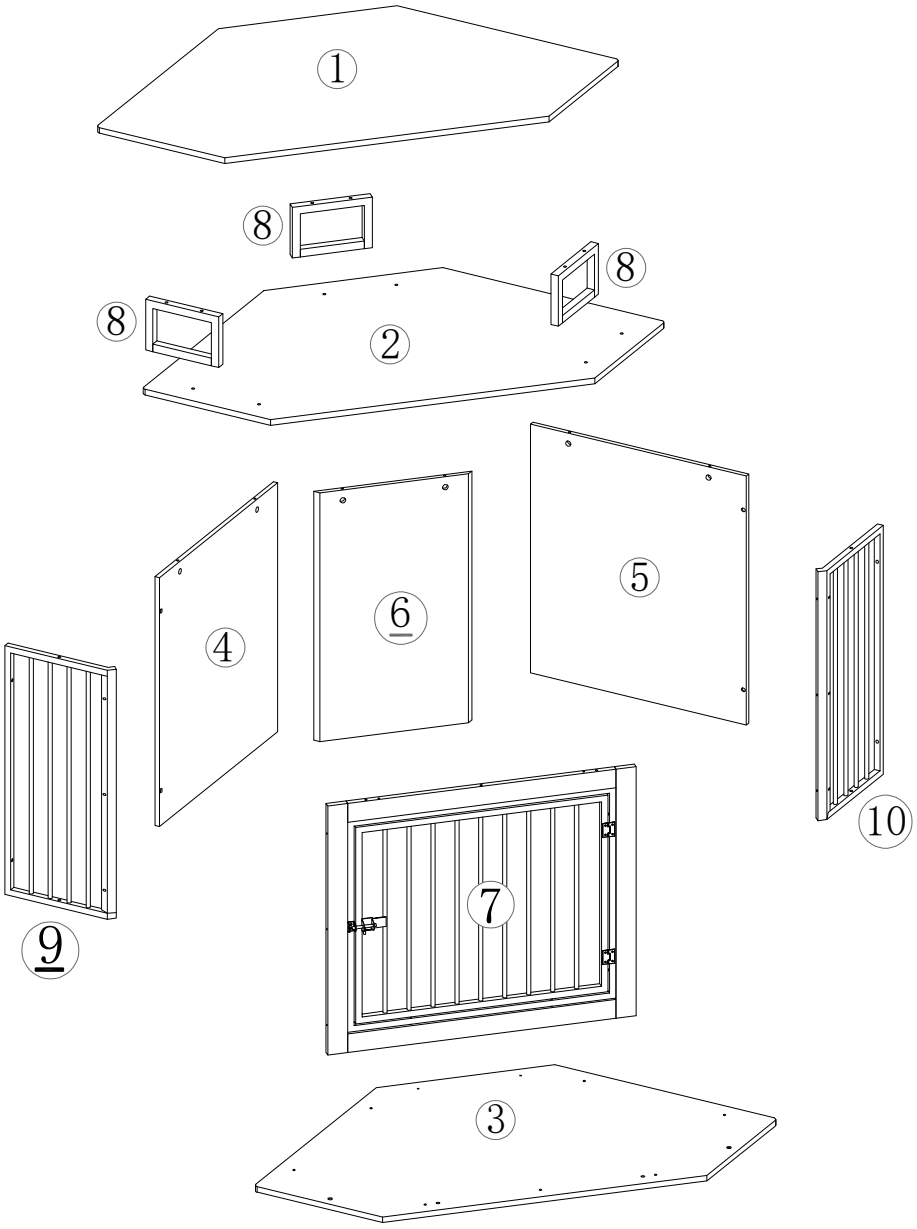

Parts and Operation Elements

① 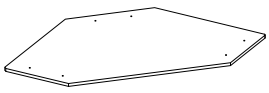 1PC	② 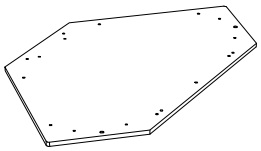 1PC	③ 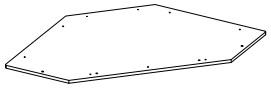 1PC	④ 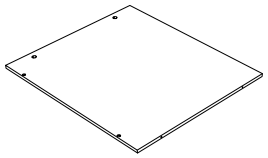 1PC
⑤ 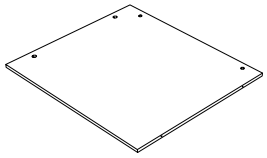 1PC	⑥ 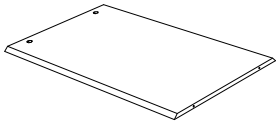 1PC	⑦ 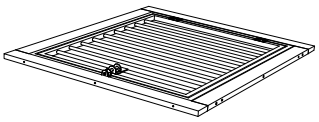 1PC	⑧ 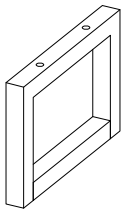 3PCS
⑨ 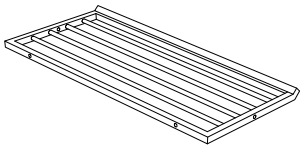 1PC	⑩ 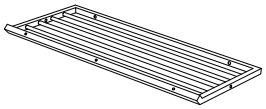 1PC		

HARDWARE LIST

A 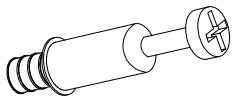 ϕ6*34mm 12+1PC	B 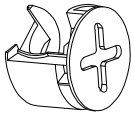 ϕ15*9.5mm 12+1PC	C  ϕ6*30mm 4PCS	D 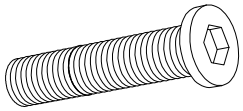 M6*30mm 12+1PC
E 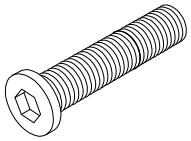 M6*24mm 8+1PC	F 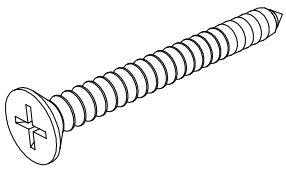 M4*40mm 12+1PC	G ϕ7 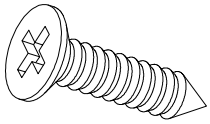 M3.5*12mm 8+1PC	H  M4 1PC
J 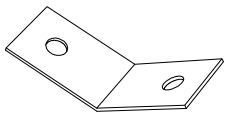 4PCS	K 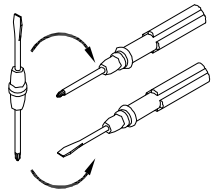 1PC	L 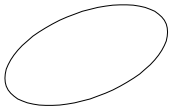 12+1PC	

01

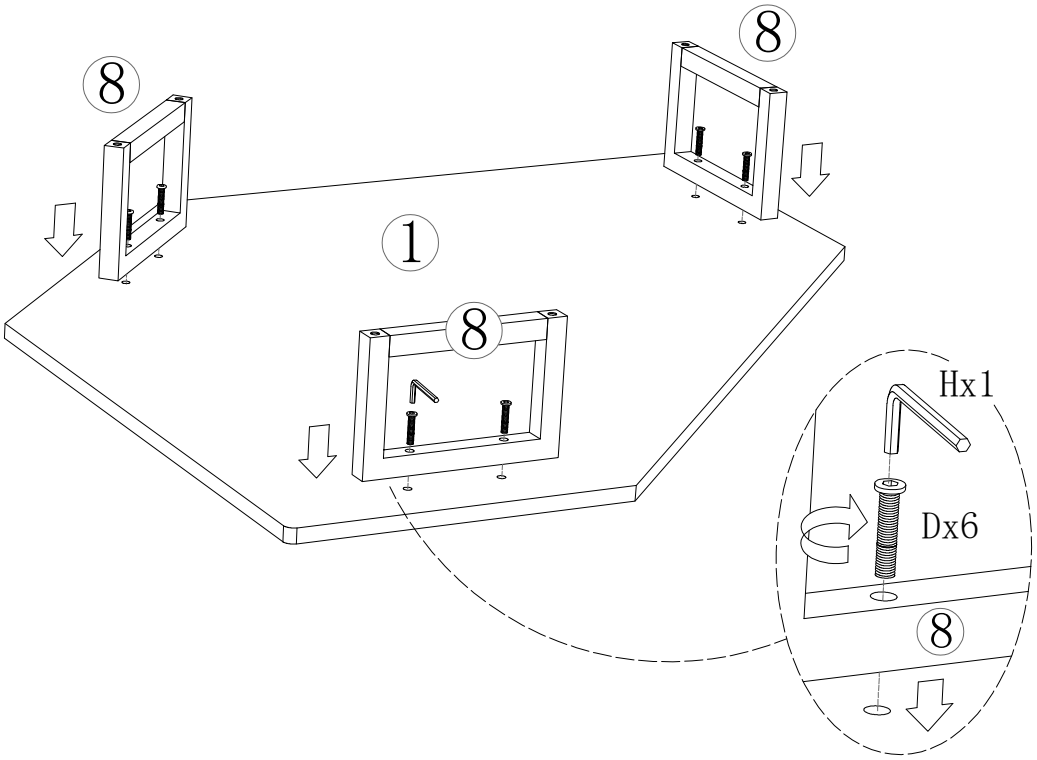

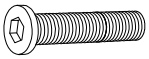

Dx6



Hx1

02

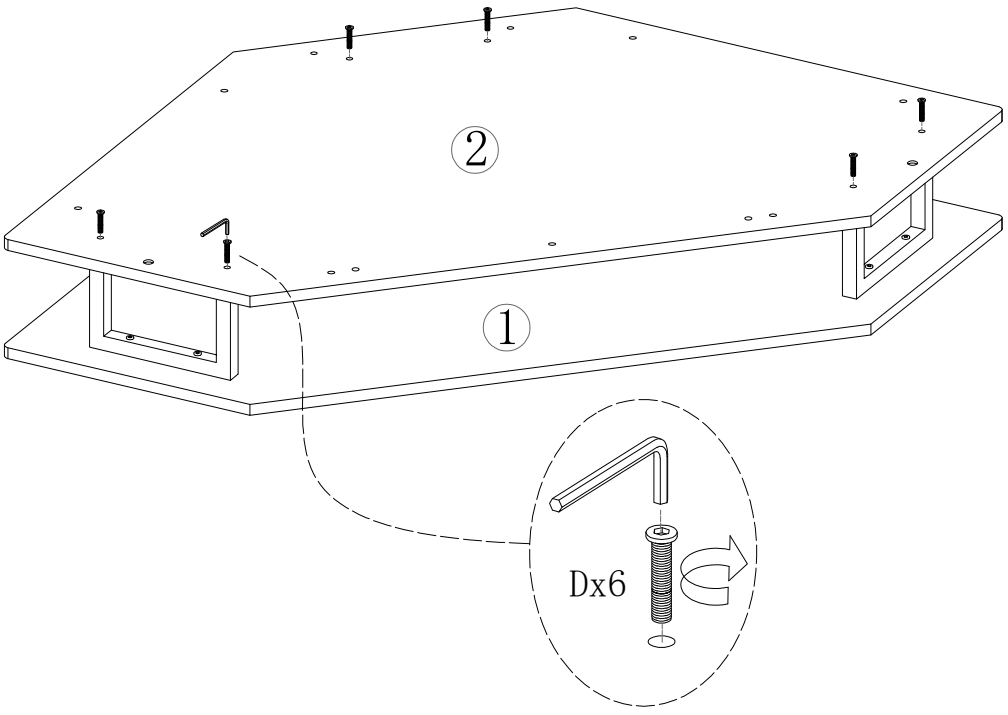

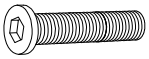

Dx6

03

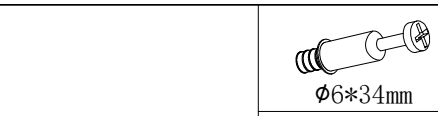

Ax9

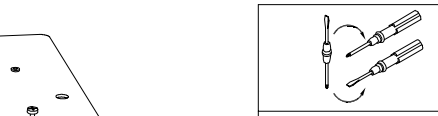

K

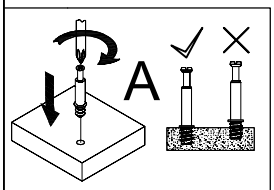

04

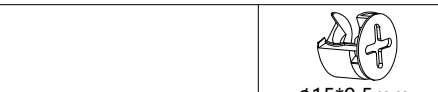

Bx2

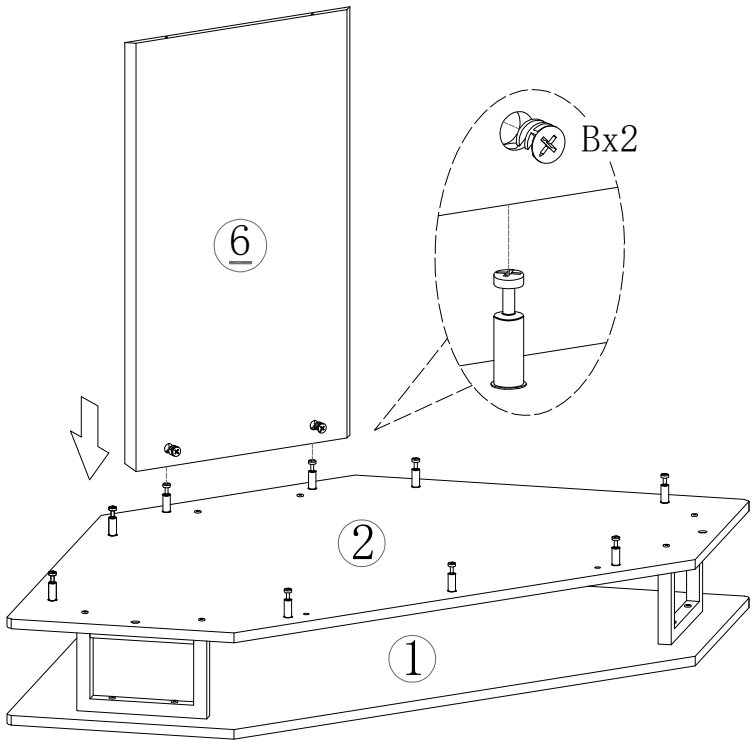

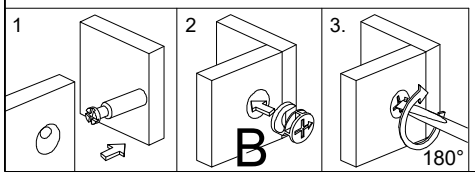

05

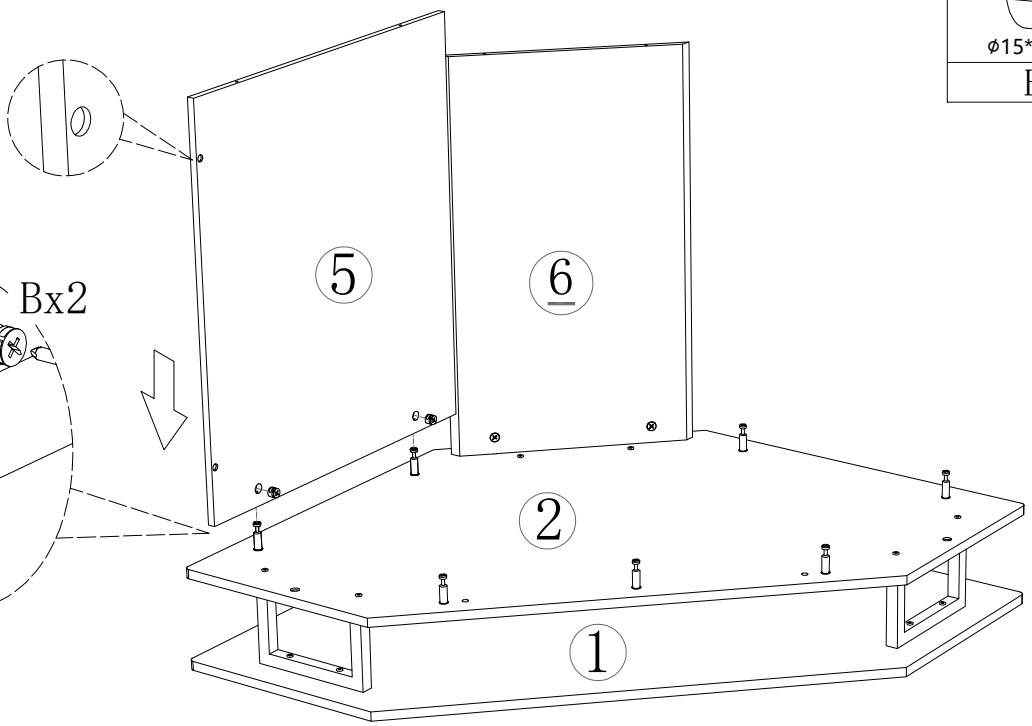

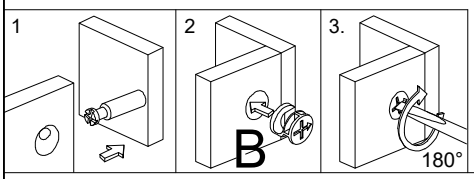



Bx2

06

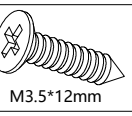

Gx4

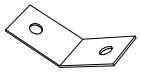

Jx2

Back View

07



Bx2

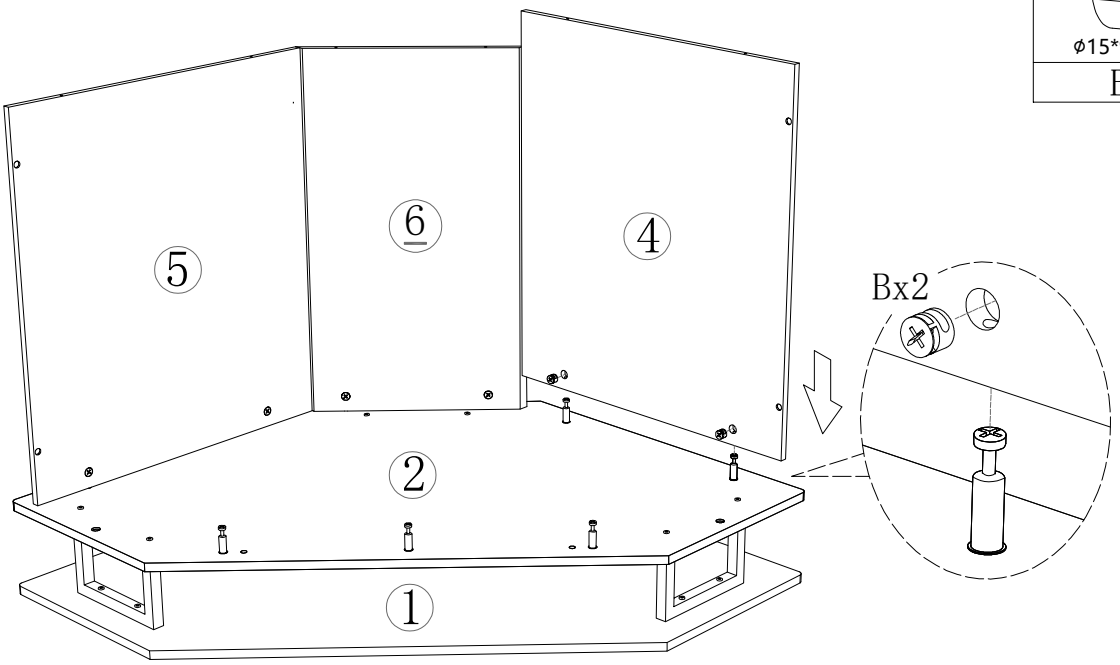

Front View

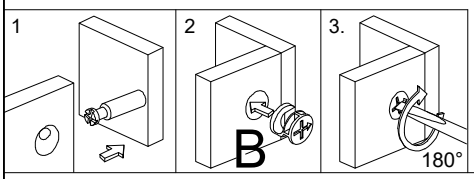

08

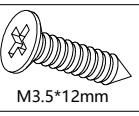

Gx4

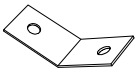

Jx2

Back View

09

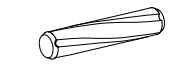

Cx2

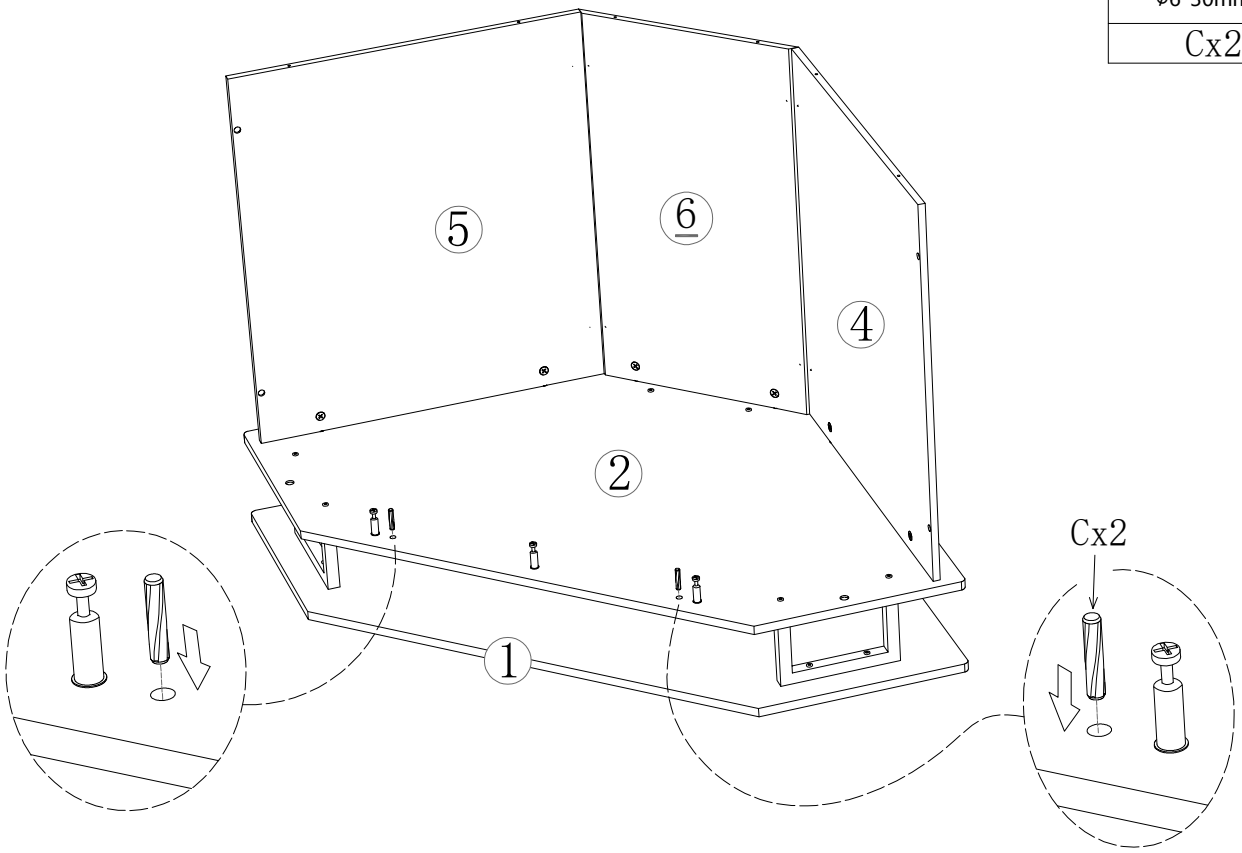

10

Before installation, please make sure to confirm that the iron door bolt is in the same direction as the component 4



Bx3

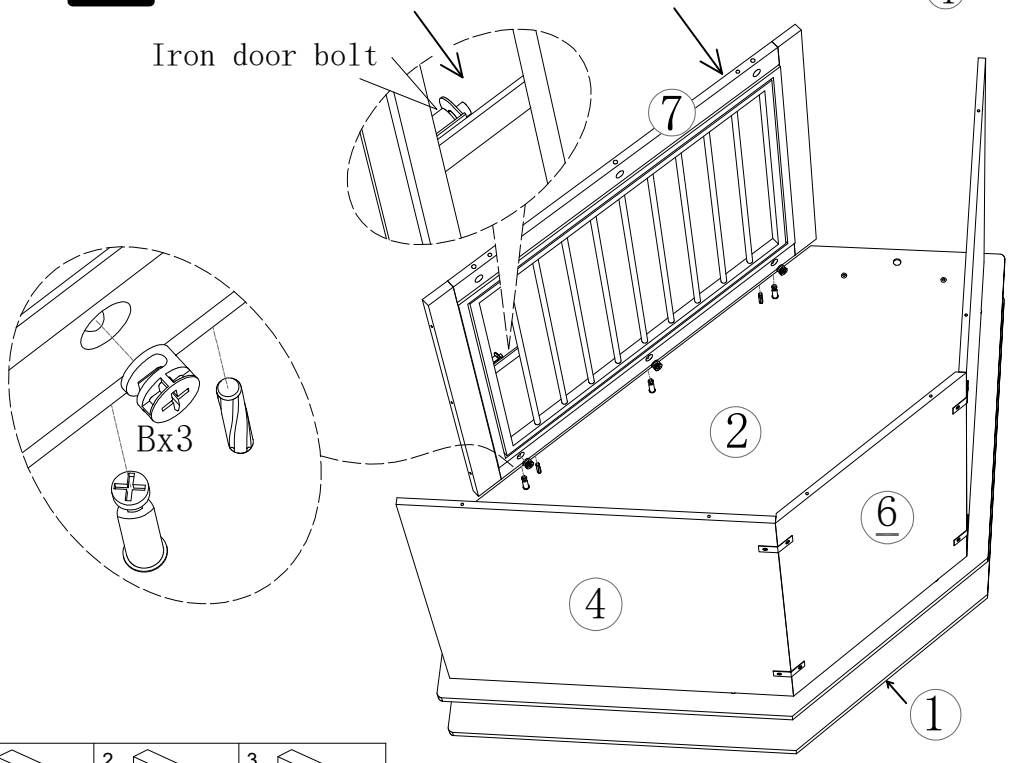

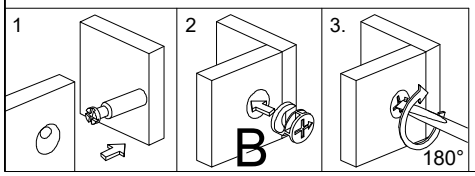

11

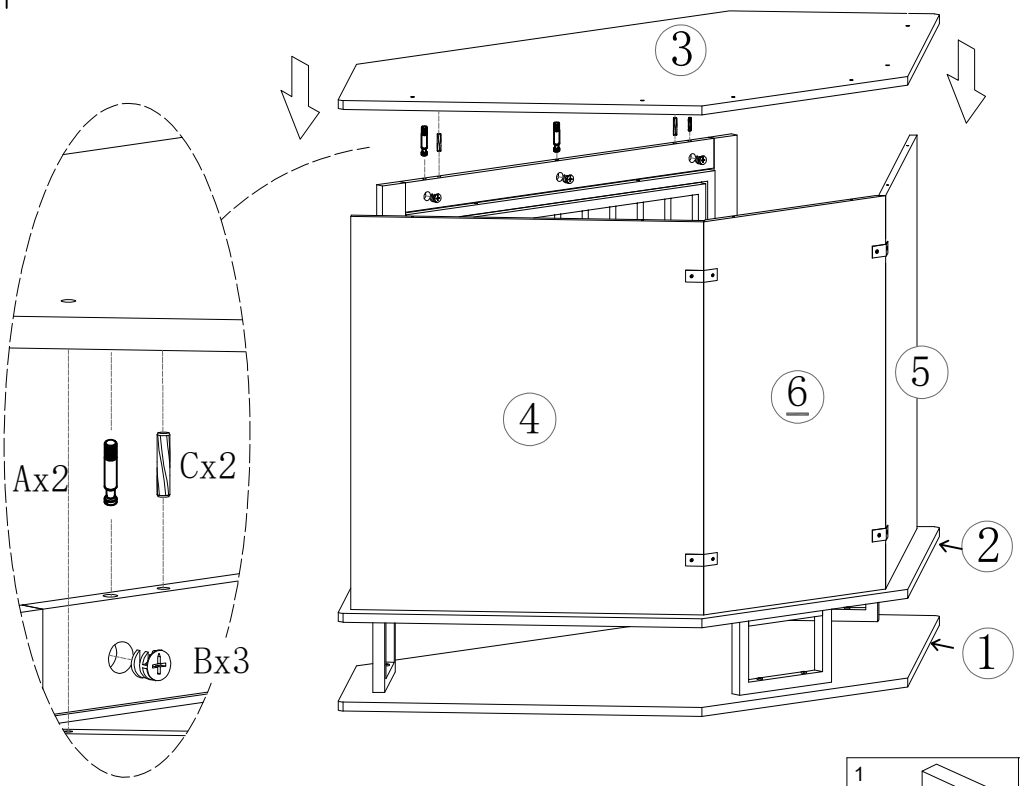

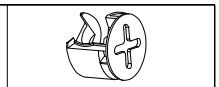

Bx3



Cx2

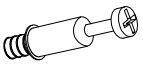

Ax3

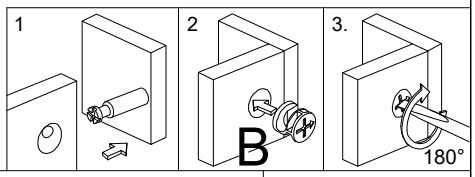

12

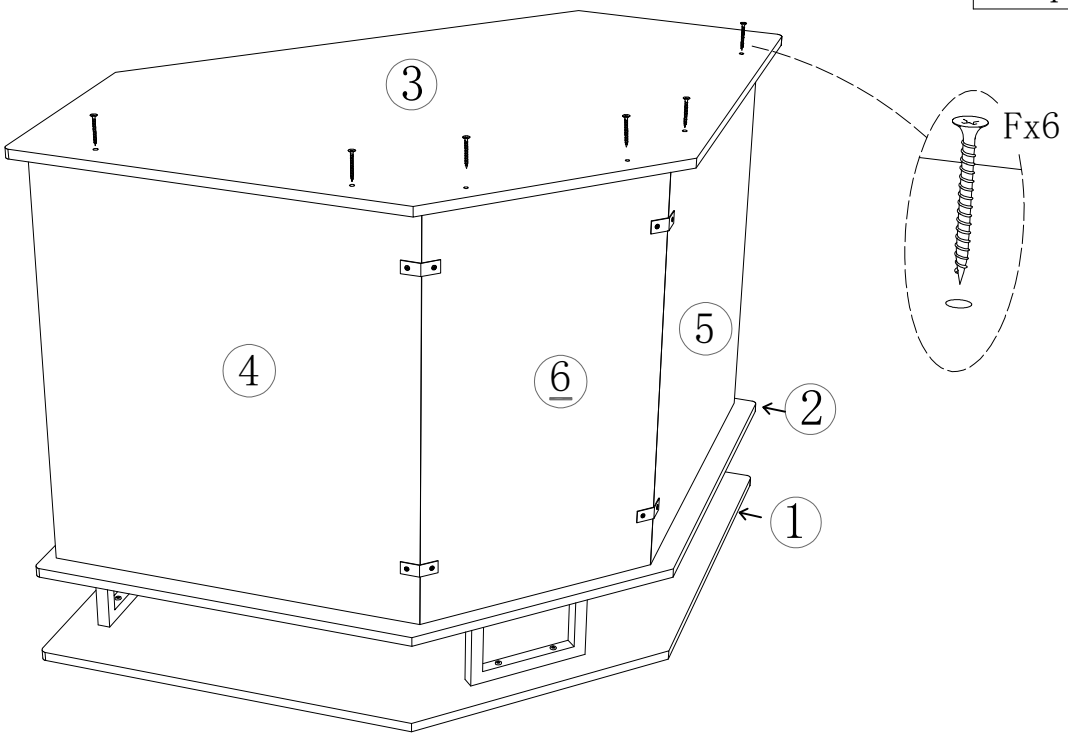



Fx6

13

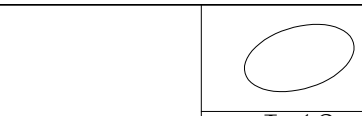

Jx12

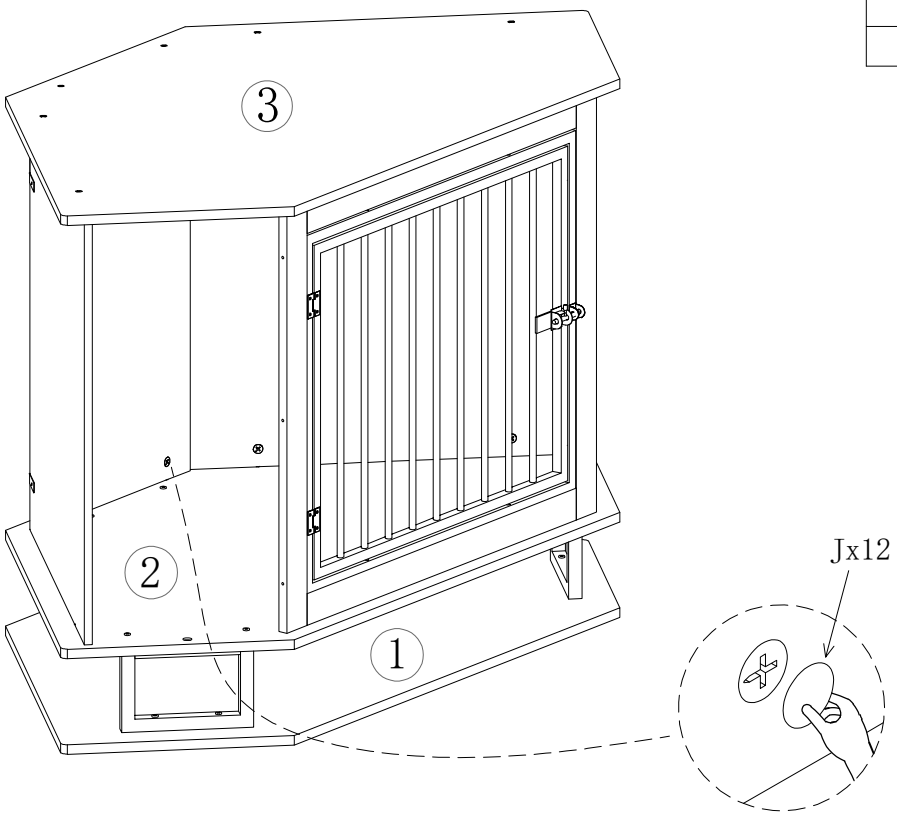

14

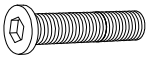

M6*24mm

Ex8

15

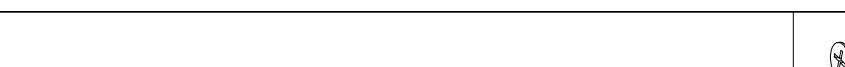

M4*40mm

Fx6

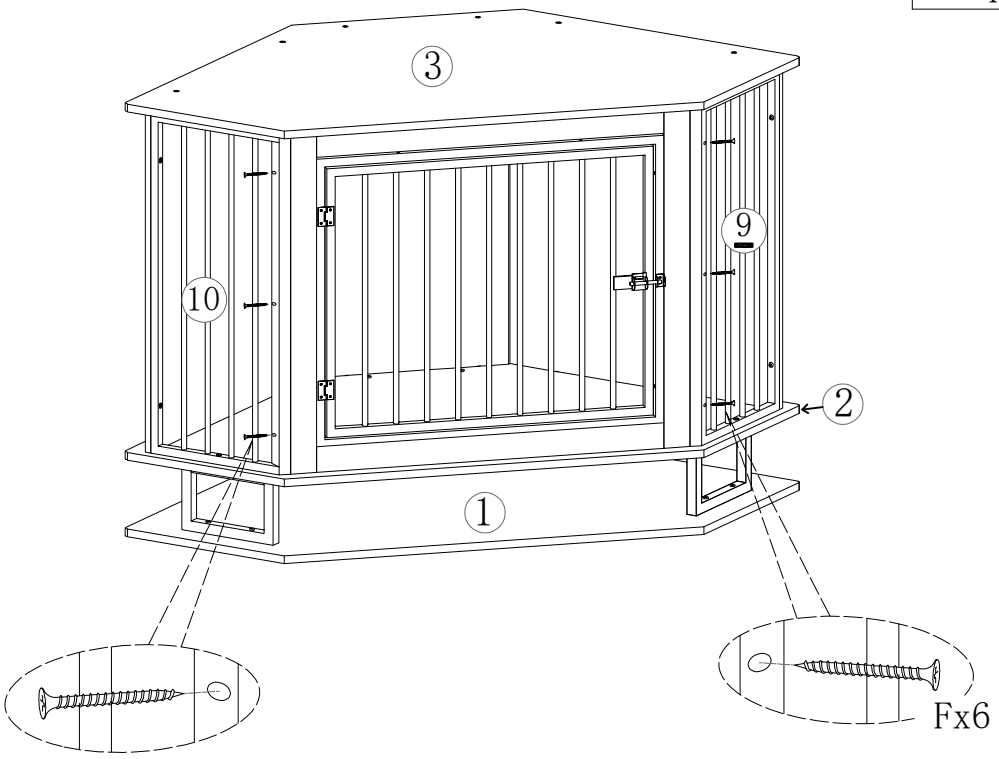

16

Two people are needed to assist with installation

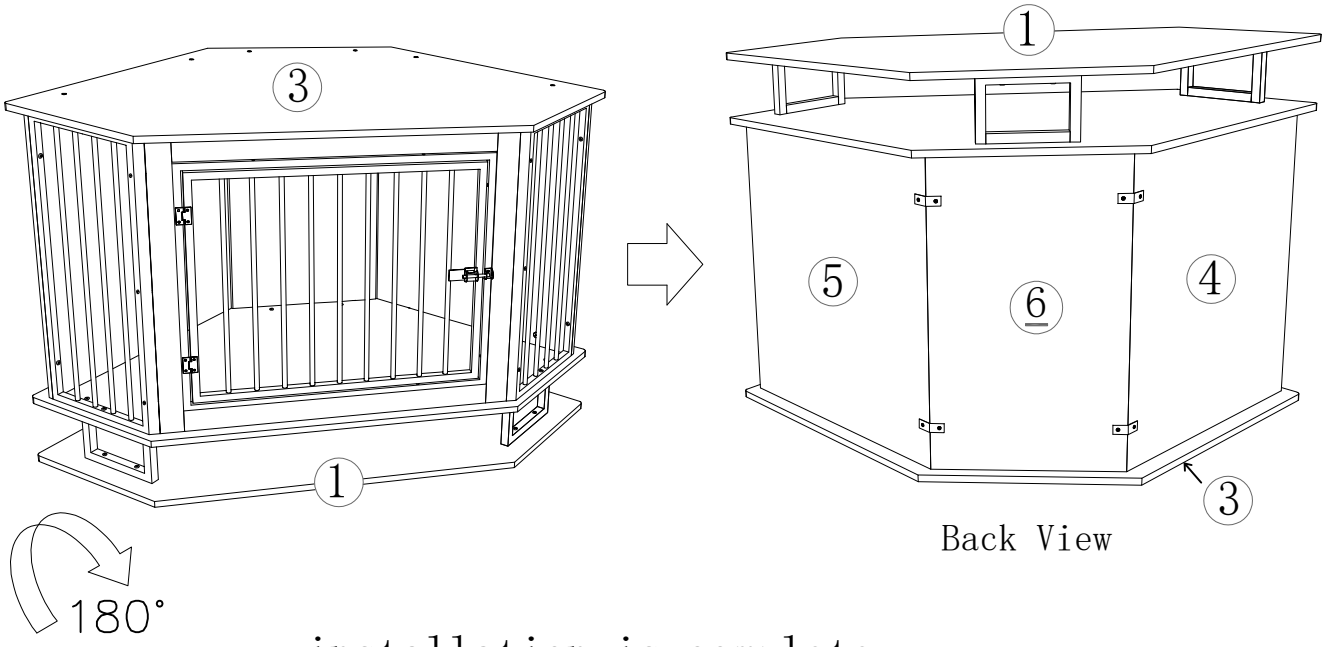

installation is complete