ALTERNATING STEP CROSS-OVER LADDER - COLA-2-68-32

APPROX WEIGHT: 268.21 lbs.
DOES NOT INCLUDE WEIGHT OF POWER OR PACKAGING!!!

*** ANY ADDITIONS, DELETIONS, OR OMISSIONS MUST BE CORRECTED ON THIS DRAWING AS THIS DRAWING WILL BE CONSIDERED ALL INCLUSIVE ***
ALL GRAPHICS PROVIDED ARE FOR REFERENCE ONLY. IF CERTAIN DIMENSIONS ARE CRITICAL PLEASE VERIFY THOSE DIMENSIONS WITH YOUR SALESPERSON

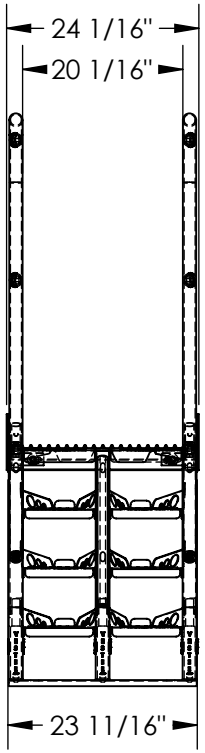

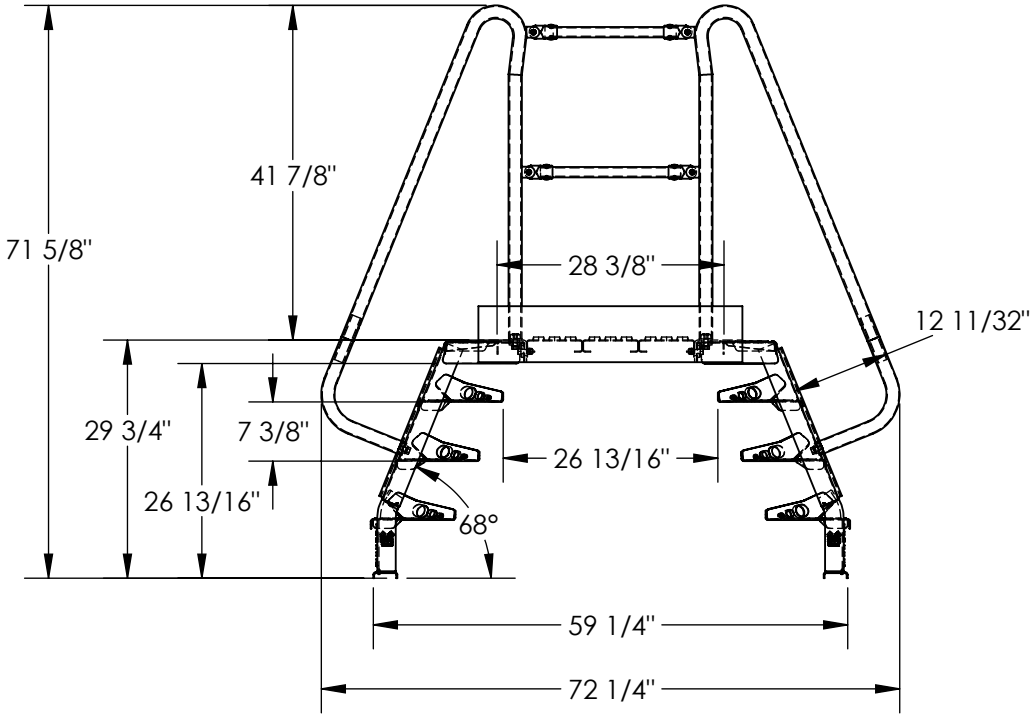

DIMENSION TOLERANCE ± 1/4"

STANDARD FEATURES

MODEL NUMBER IS COLA-2-68-32
OVERALL WIDTH IS 24 1/16"
OVERALL LENGTH IS 72 1/4"
OVERALL HEIGHT IS 71 5/8"
MAX CAPACITY IS 350 LBS
PLATFORM HEIGHT IS 29 3/4"
PLATFORM WIDTH IS 23 11/16"
USABLE PLATFORM WIDTH IS 20 1/16"
PLATFORM LENGTH IS 28 3/8"
STEP HEIGHT SPACING IS 7 3/8"
CLIMB ANGLE IS 68°
CLEARANCE WIDTH IS 26 13/16"
CLEARANCE HEIGHT IS 26 13/16"
KNOCK-DOWN DESIGN
(UNIT SHIPS KNOCKED-DOWN, ASSEMBLY REQUIRED)
UNIT MUST BE ANCHORED TO THE FLOOR!
(ANCHORING HARDWARE NOT INCLUDED)
TOUGH BAKED IN POWDER COATED YELLOW FINISH

SPECIAL FEATURES

NONE

APPROVAL

I, THE UNDERSIGNED, AGREE THAT THE PRODUCT AS REPRESENTED SATISFIES DESIGN AND DIMENSION REQUIREMENTS. I ALSO ACKNOWLEDGE MY DUTY TO CONFIRM PRODUCT AND INSTALLATION COMPLIANCE WITH ALL APPLICABLE FEDERAL, STATE AND LOCAL REGULATIONS AND STANDARDS.

ANY MODIFIED UNITS ARE NON-RETURNABLE

[ ] As drawn [ ] As marked

Signed:_____Date:_____

Printed Name:_____

LEAD TIME WILL START UPON RECEIPT OF SIGNED APPROVAL DRAWING

FOR INTERNAL USE ONLY PROJECT SIGN OFF	
SALES	
ENG.	
FAB.	
POWER	

DISTRIBUTOR'S NAME: VESTIL MANUFACTURING			P.O.# X
			W.O.# X
DRAWN BY: KGH	DATE: 1/11/2017		SALES: X
REFERENCE: X		SCALE: 1:24	FILE NAME: 44-007-631
QUOTED LEAD TIME: X	QUOTE # X		