ASSEMBLY INSTRUCTIONS

SKU:XD-70TVS-23PC

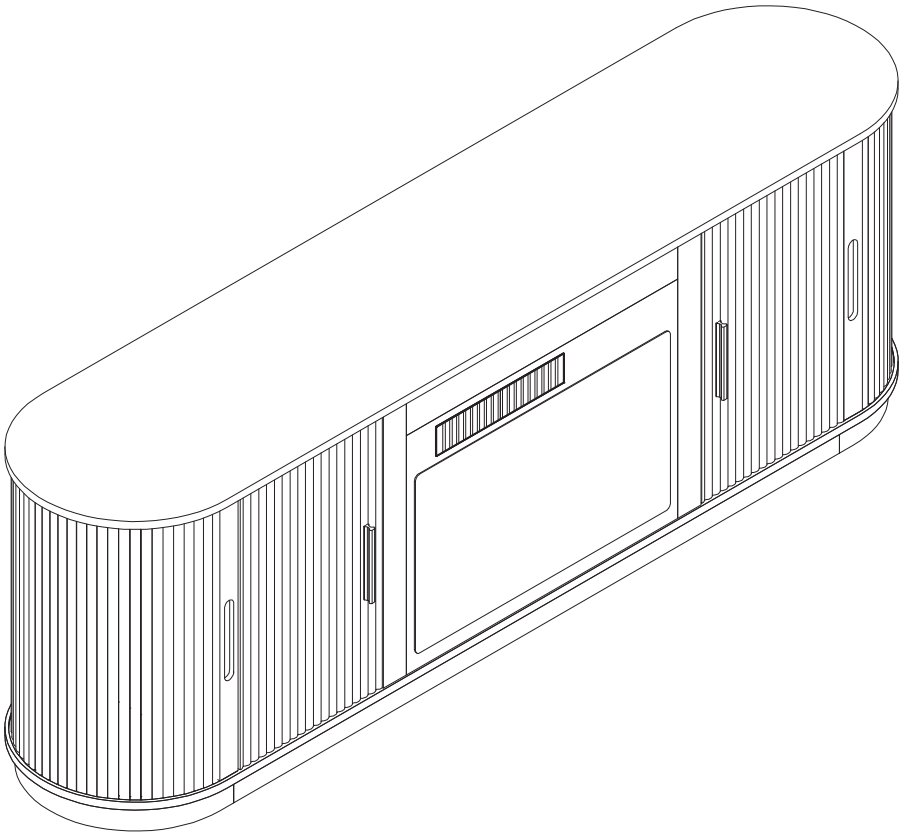

Attention: The Fireplace and TV stand come in TWO PACKAGES.
Please don’t be confused if only one package was received.

hellovitesse@gmail.com

+1(503) 928-7812

HOPE YOU HAVE A PERFECT SHOPPING EXPERIENCE!

Our product is designed with excellence crafted from premium materials, and exhibits a unique sense of style. Every detail has been thoughtfully considered to bring both elegance and functionality to your space.

Whether in the office or at home, our product offers long-lasting performance and versatile use. We believe it will enhance your environment and make your daily tasks easier.

If you encounter any issues or have questions, please don't hesitate to contact our dedicated customer service team. We are always here to assist and ensure your satisfaction.

IMPORTANT SAFETY INSTRUCTIONS

Read these instructions carefully and retain them for future use.

When using the product, basic safety precautions always be followed to reduce the risk of injury, including the following:

- This product must be assembled by an adult.
- Keep children and pets away while assembling the product.
- Remove all the packing materials and review all components before assembly.
- Do not over-tighten the fasteners.
- To avoid scratching the floor, assemble the product on a soft surface, such as a carpet.
- Do not use this product if any parts are missing, damaged, or worn.
- Always use the product on a firm, level ground.
- Do not let the children climb on or play with the product.
- Keep all sharp objects away from the upholstery.
- Regularly examine the product for wear and tear. Stop using the product at the first sign of damage or if the parts detached.

PARTS LIST

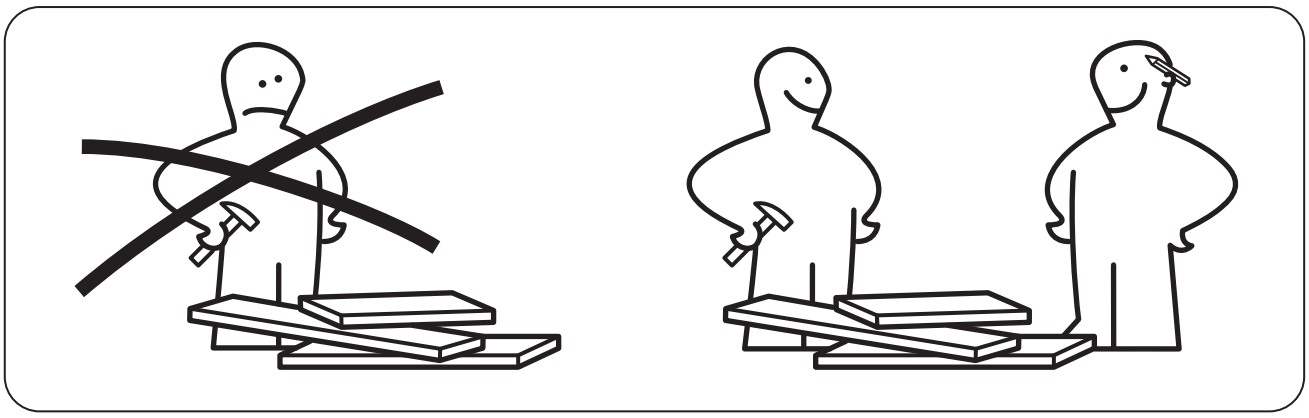

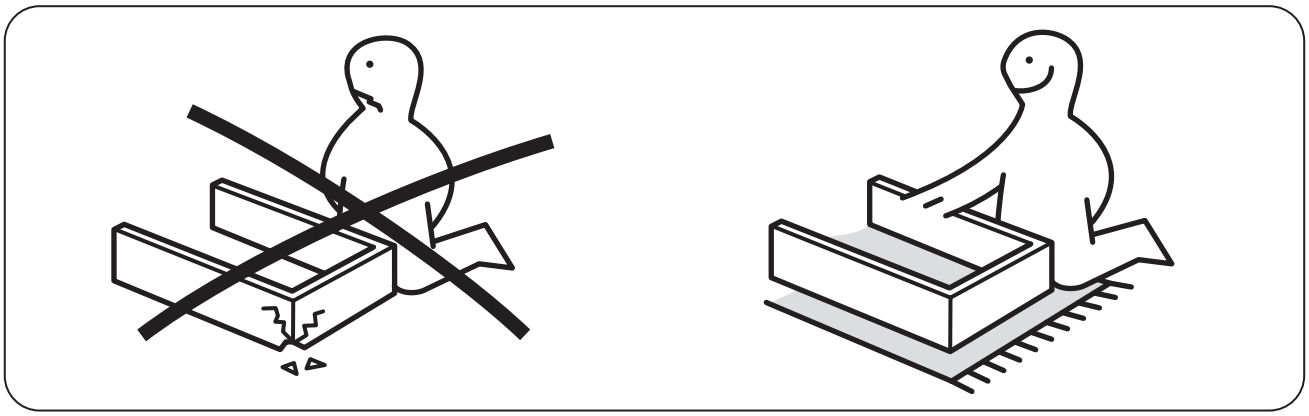

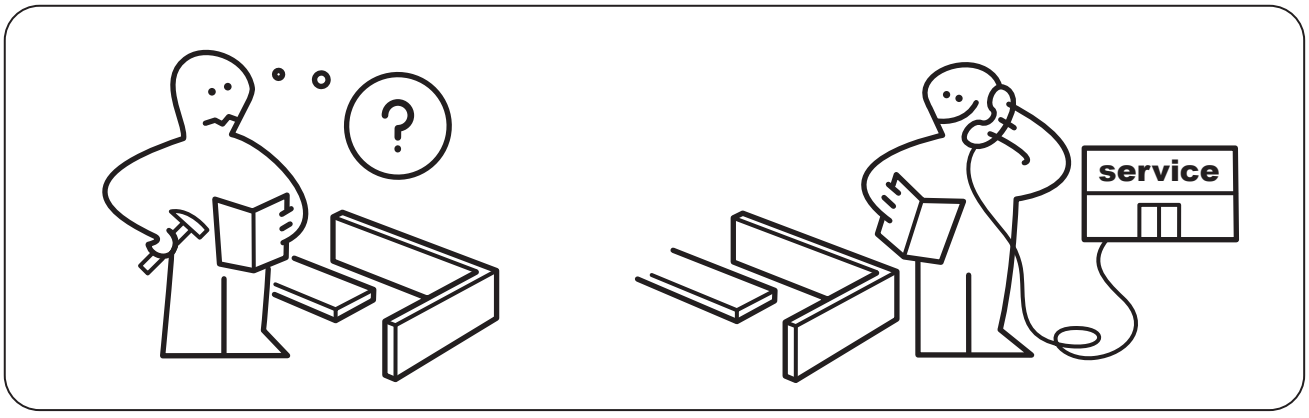

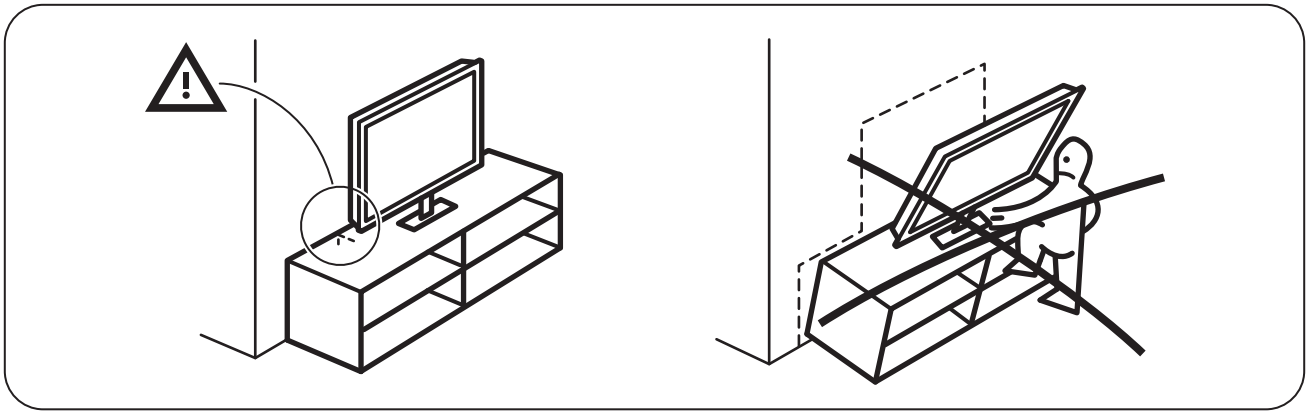

PARTS LIST

NOTICE

Please make sure all the parts are included.If there are parts missing, please feel free to contact our customer service team.
hellovitesse@gmail.com

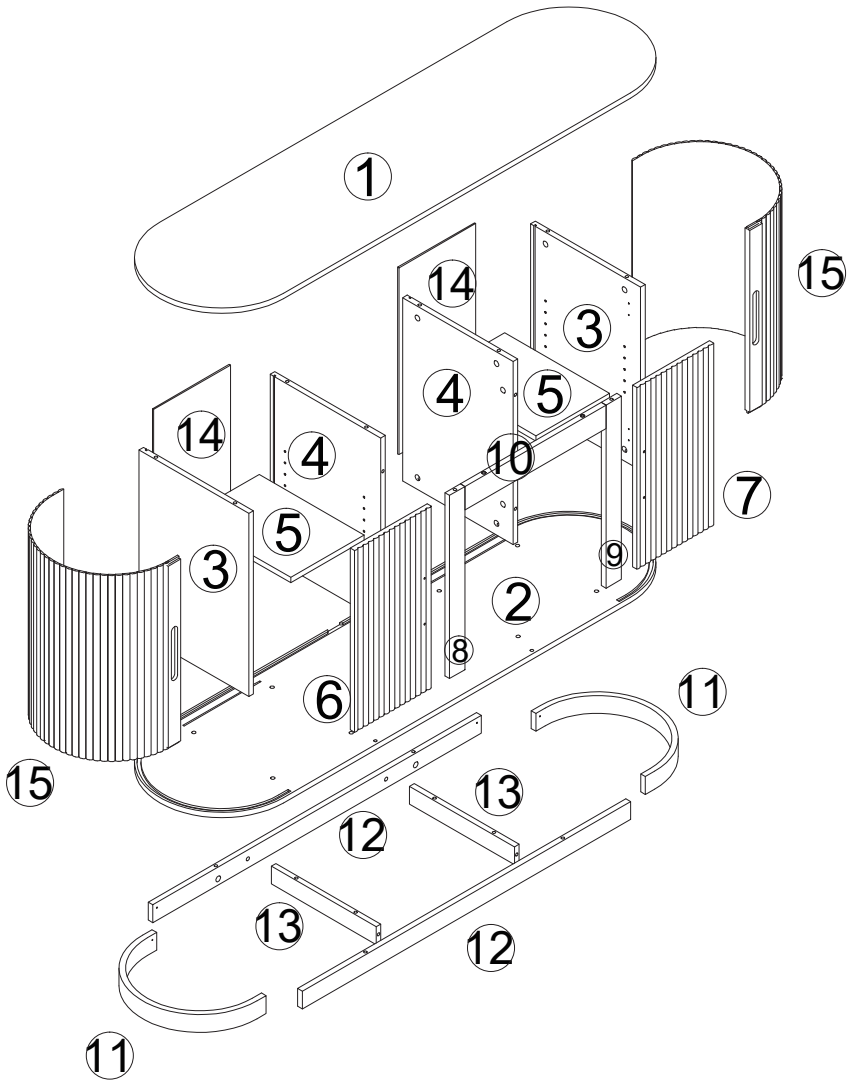

A φ8*30mm Qty:6	B φ15*12mm Qty:34+1	C φ6*43mm Qty:34+1	D Qty:2	E K3.5*12mm Qty:48+2	F Qty:4
G M4*18mm Qty:2	H H1 H2 Qty:2	I K3*12mm Qty:8+1	J Qty:8	K Qty:8+1	

Installation steps

STEP 1

First, press Part C downward into the hole until the white plastic thread is fully inserted. Then, screw the bolt in clockwise.
Note: If the white plastic cannot be pressed in, gently tap it with a tool until it fits.

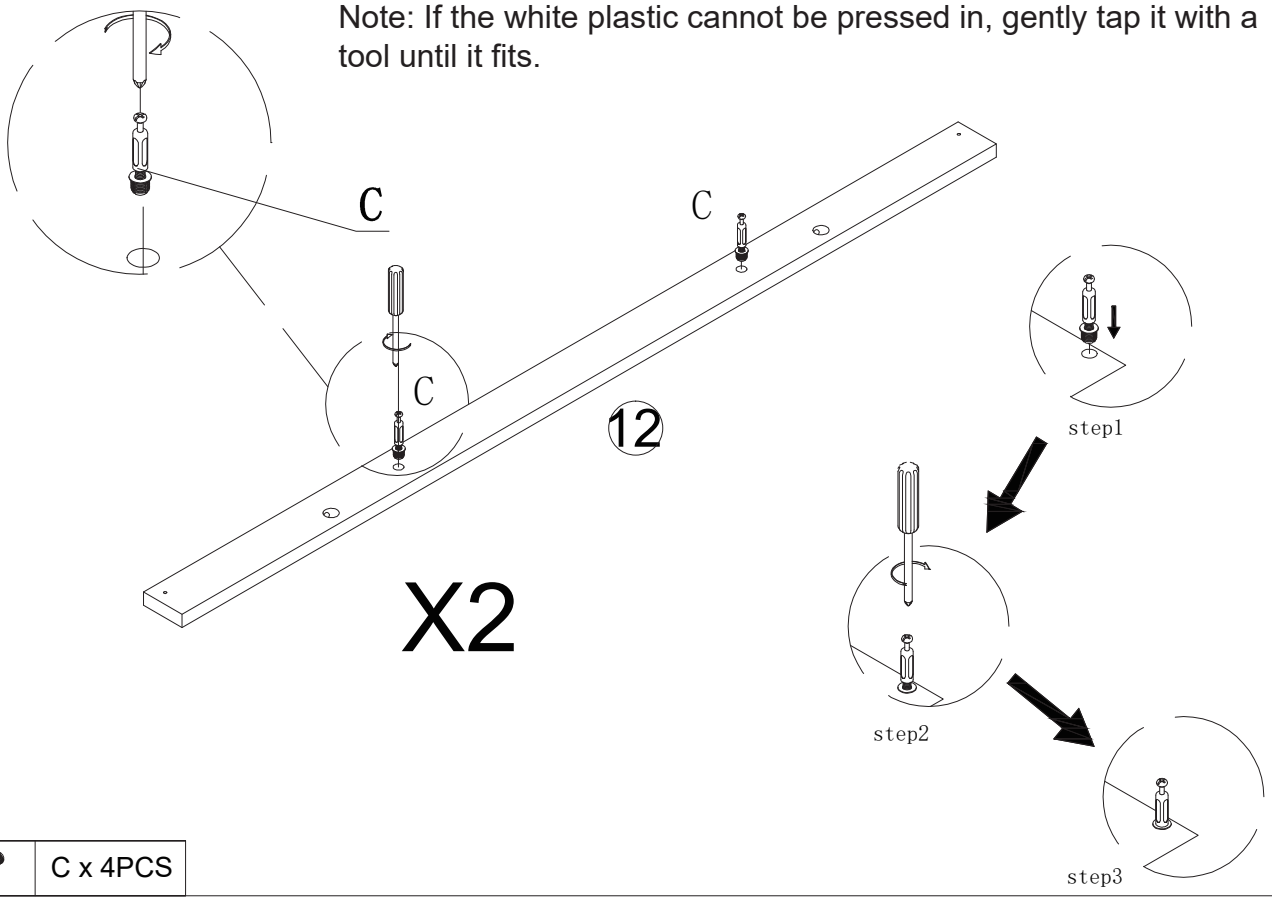

	C x 4PCS

STEP 2

If there is any looseness or wobbling, tighten the screw or reinstall the part.

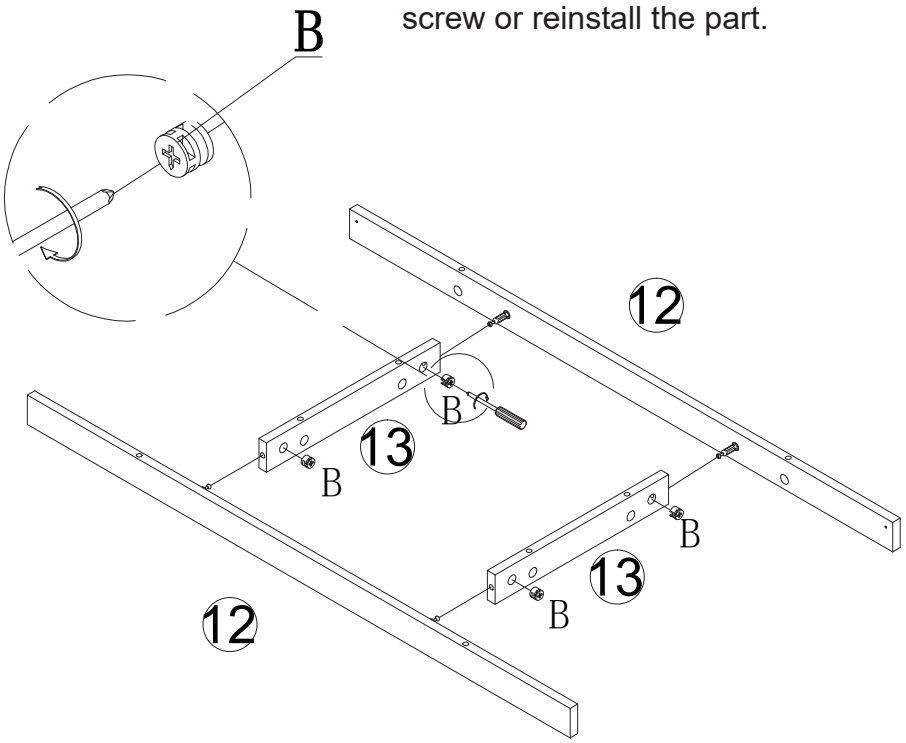

	B x4PCS

Installation steps

STEP 3

First, insert Screw C into the designated hole, then tighten it with a screwdriver.

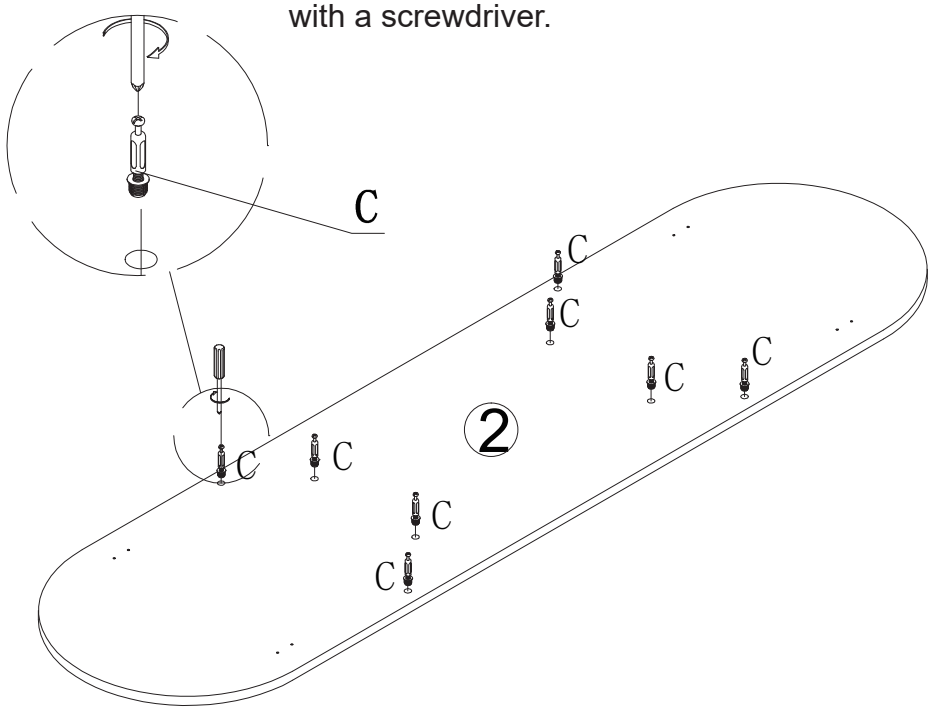

	C x 8PCS

STEP 4

Bottom
Current view shows the bottom perspective.

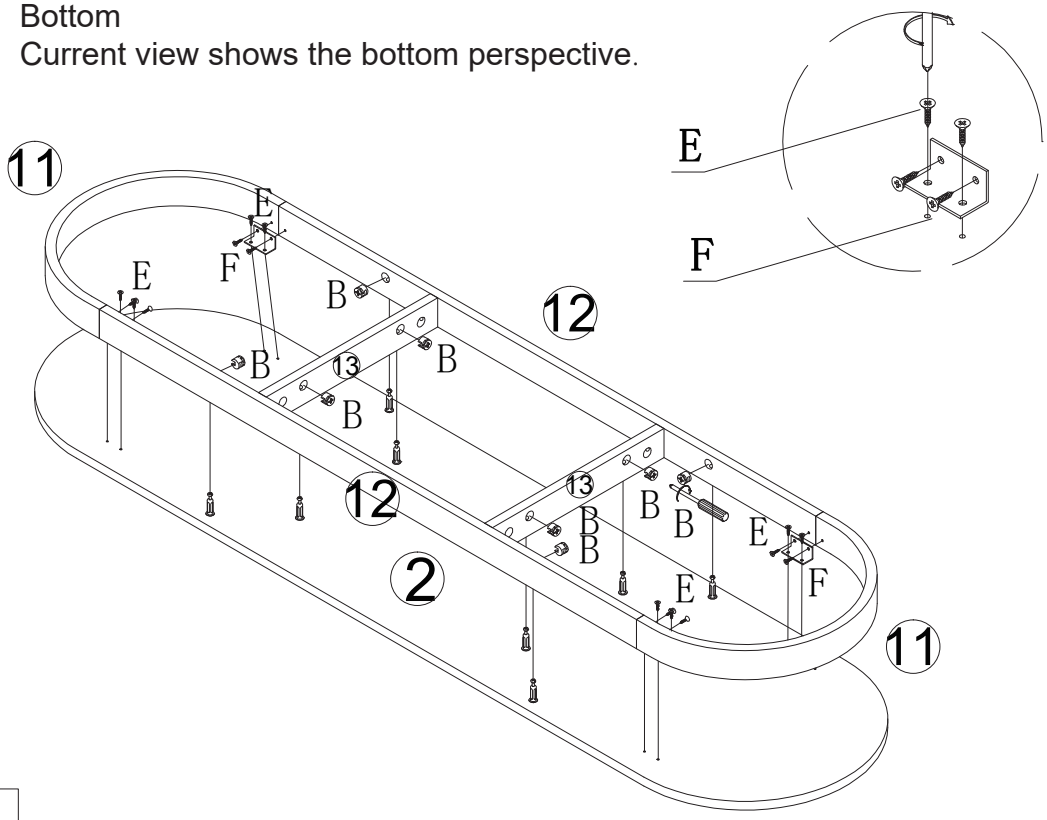

	B x4PCS
	E x 8PCS
	F x 2PCS

Installation steps

STEP 5

Flip,Gently turn the product over as instructed in the previous step.

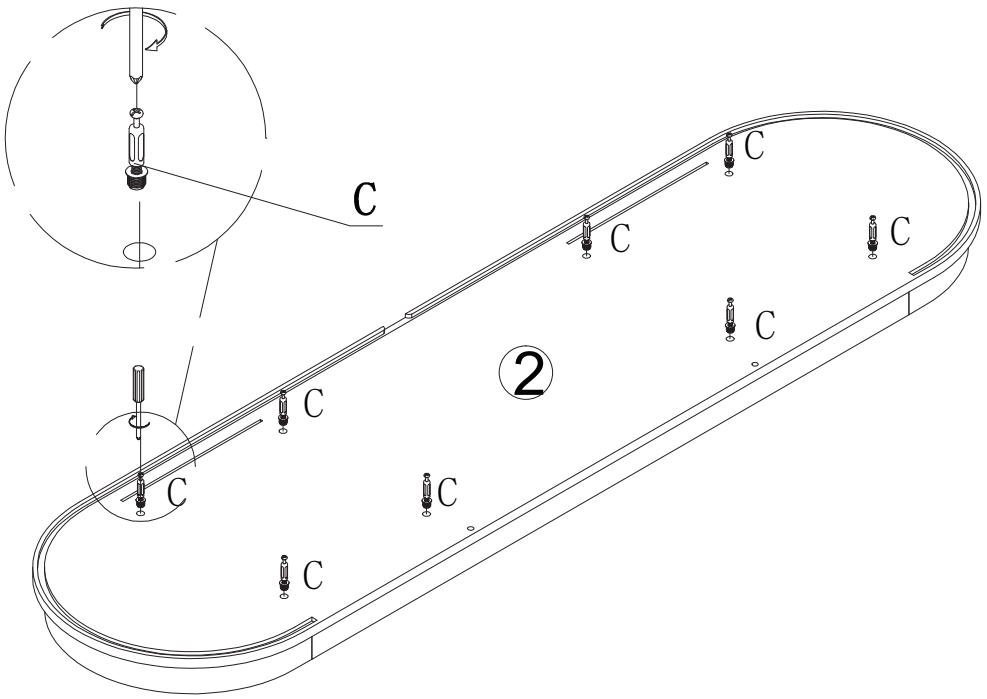

	C x 4PCS

STEP 6

First, insert the C screw into the corresponding hole, and then tighten it with a screwdriver.

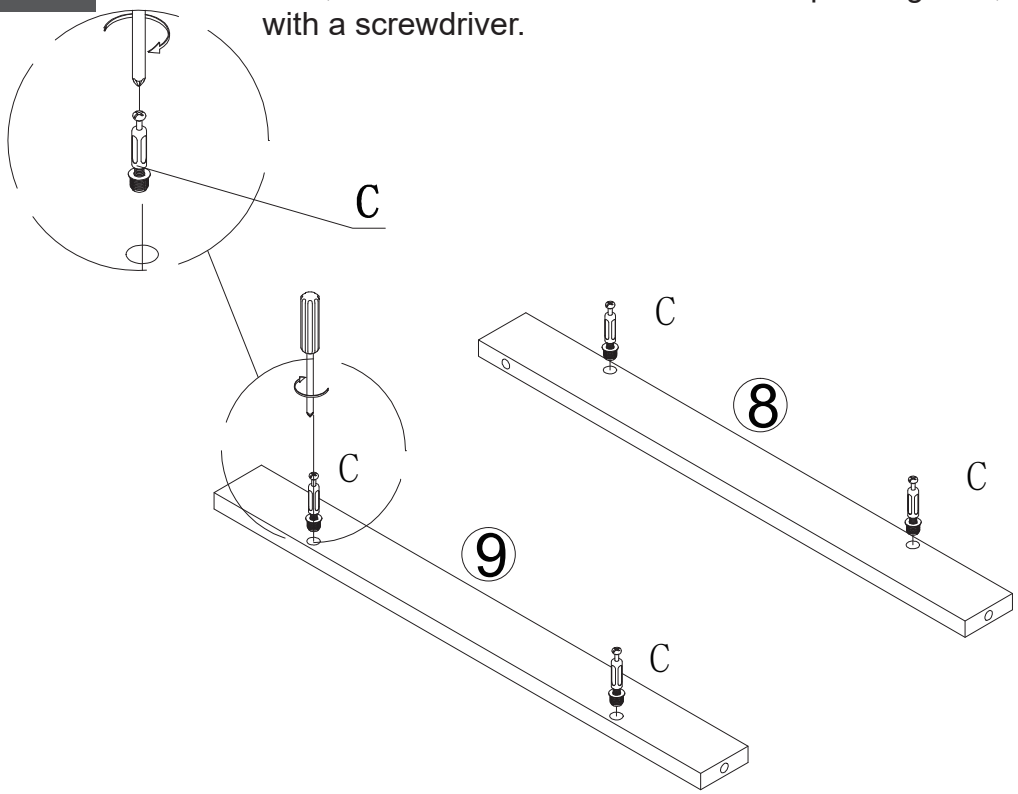

	C x 4PCS

Installation steps

STEP 7

Note: This is a screwdriver, not a wooden peg.

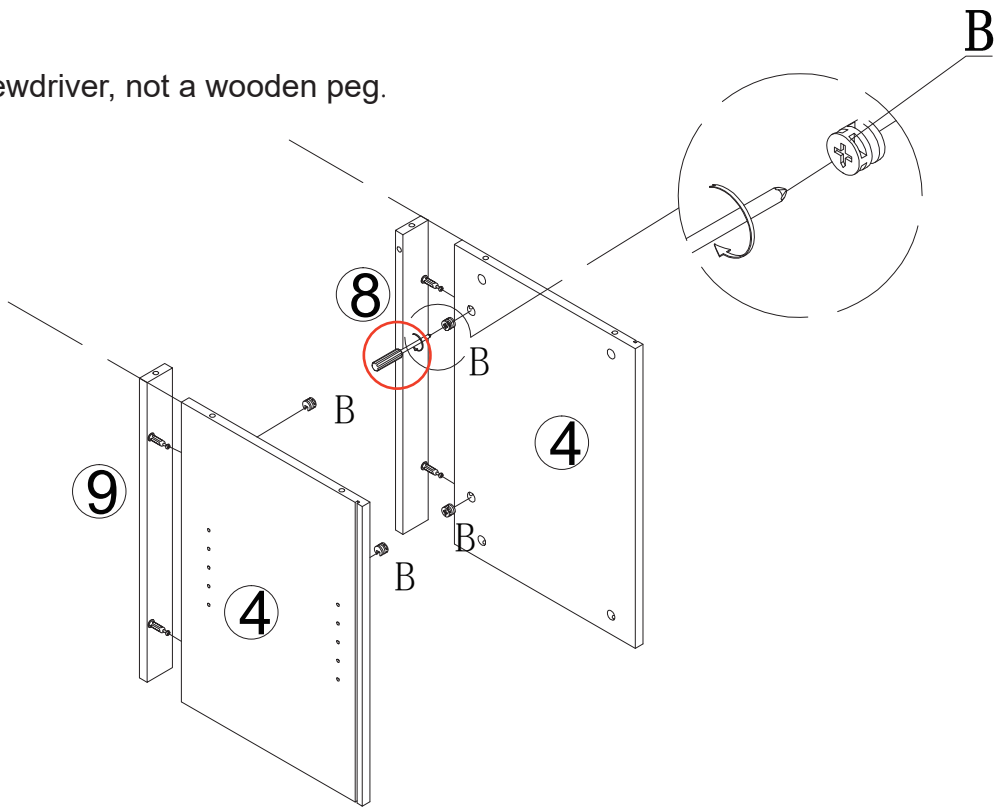

STEP 8

First, connect 4 and 13 with two As. Then, connect the entire result with 2.

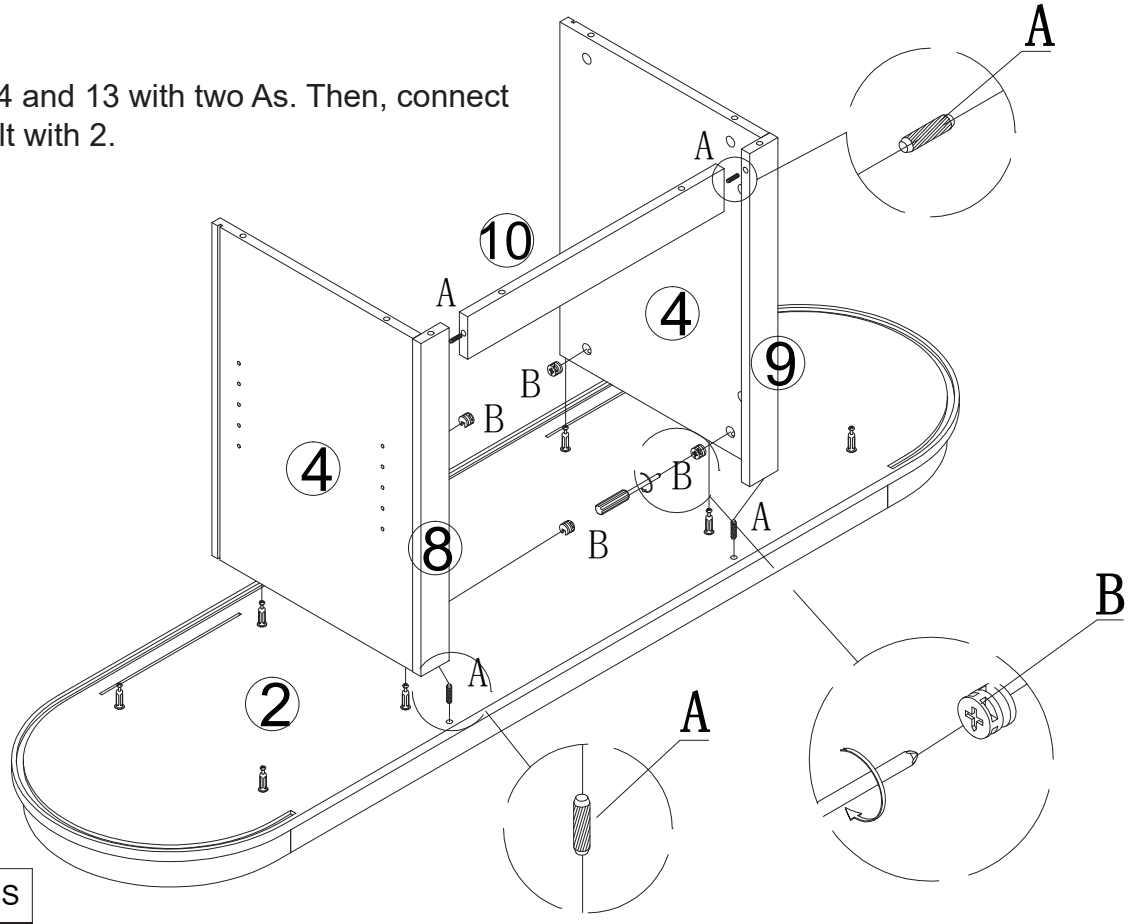

	A x 4PCS
	B x4PCS

Installation steps

STEP 9

Position the part with pre-drilled holes facing the interior side of the cabinet.

Align and insert the grooved side into the slot.

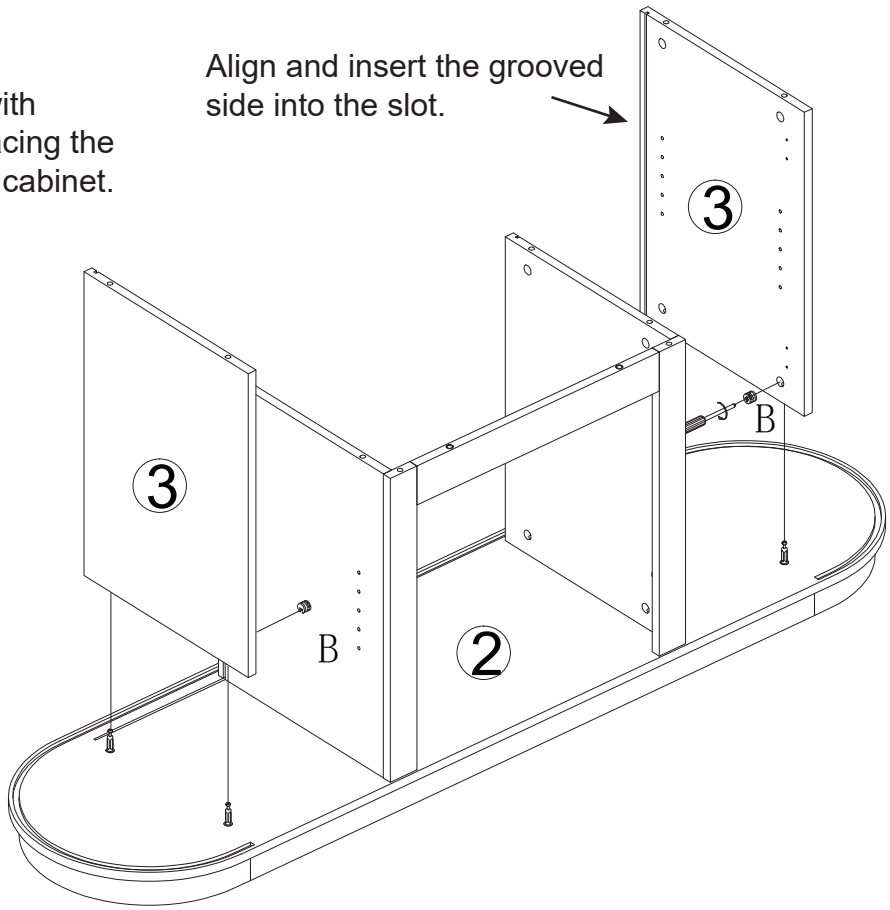

	B x4PCS

STEP 10

Push 14 all the way into the 3 and 4 slots until it is fully inserted, then slide it into the slot of 2.

Press 14 firmly into place until fully seated.

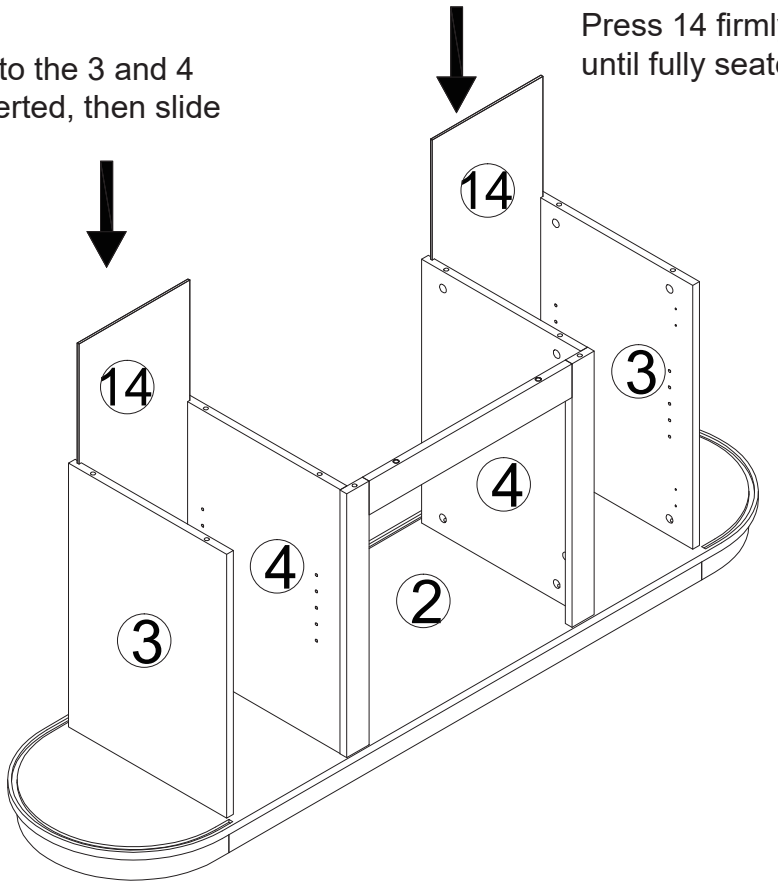

Installation steps

STEP 11

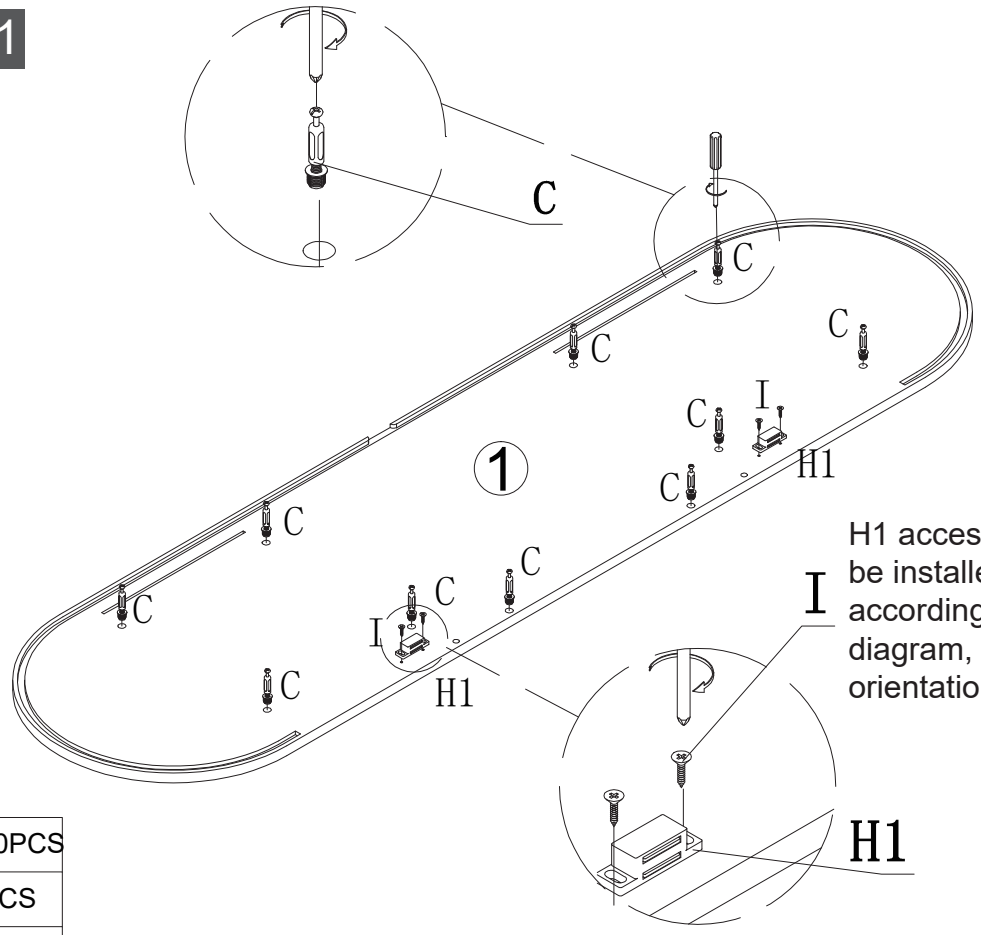

H1 accessory must be installed strictly according to the diagram, with correct orientation.

	C x 10PCS
	I x 4PCS
H1	H1 x 2PCS

STEP 12

When installing the No. 1 board, you need to align multiple holes and screws. It is recommended that two people work together. If there is any misalignment, you can gently move the screws or reinstall them.

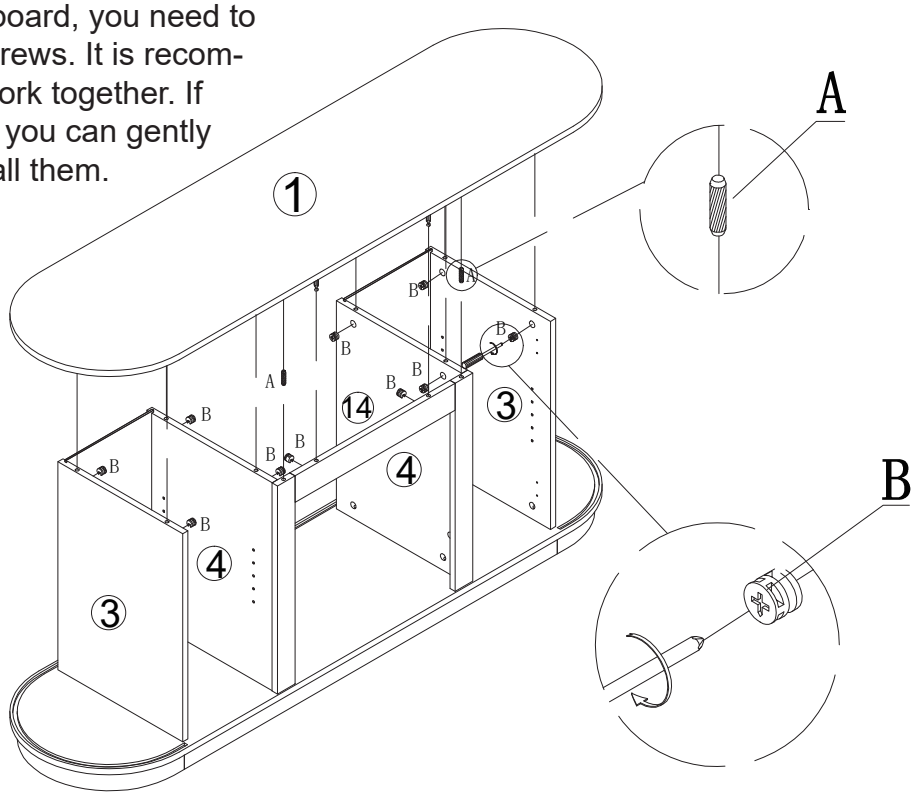

	A x 2PCS
	B x10PCS

Installation steps

STEP 13

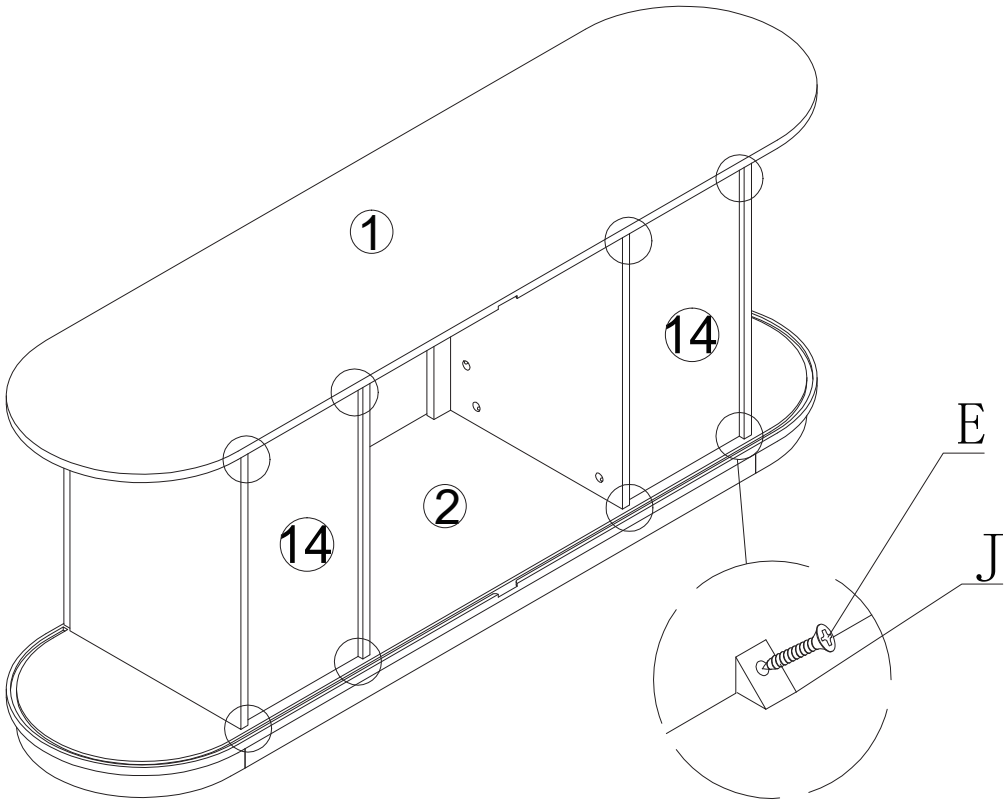

	E x 8PCS
	Jx 8PCS

Insert the thinner side of J into the gap of the 14th board and tighten the screws. Tighten the screws at a 45-degree angle.

STEP 14

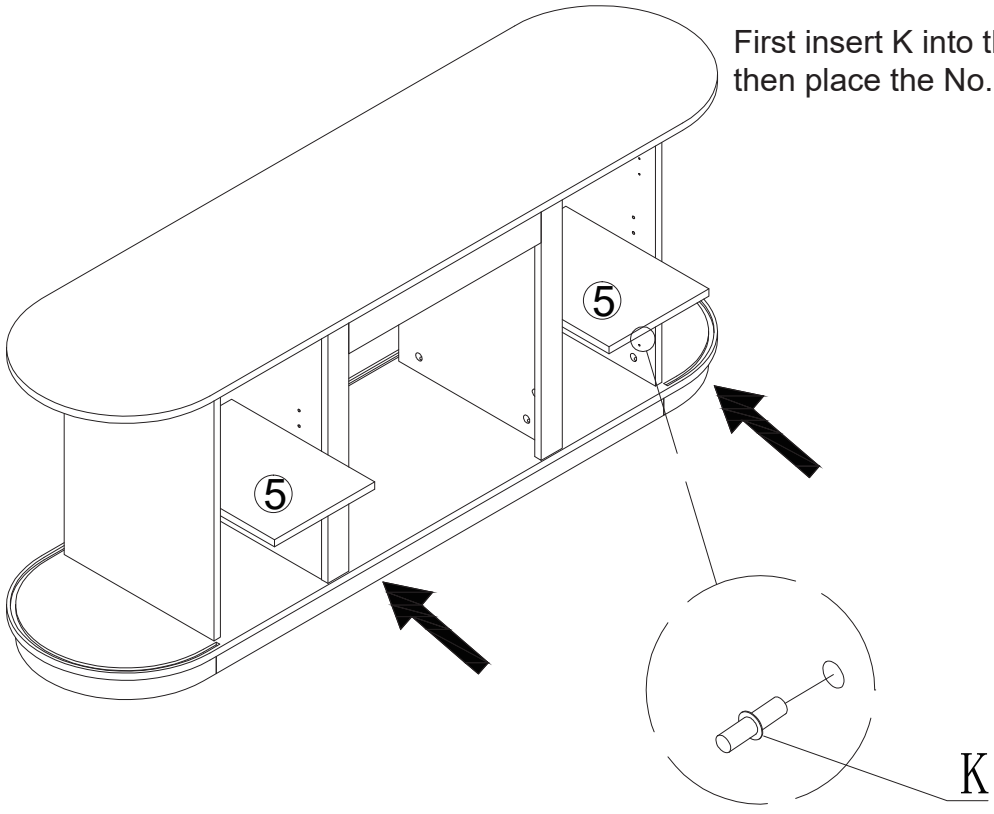

First insert K into the slot, then place the No. 5 board.

	Kx 8PCS

Installation steps

STEP 15

The height of Panel 5 adjusts automatically based on where you install Component K – raise K to lift the panel, lower K to drop it. Just set K to your preferred position first, then attach Panel 5.

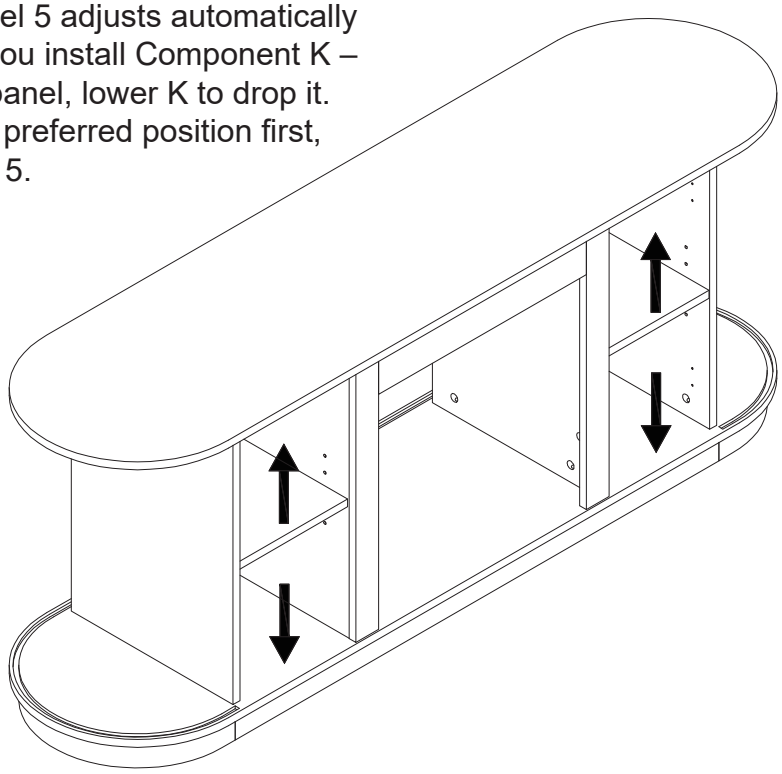

STEP 16

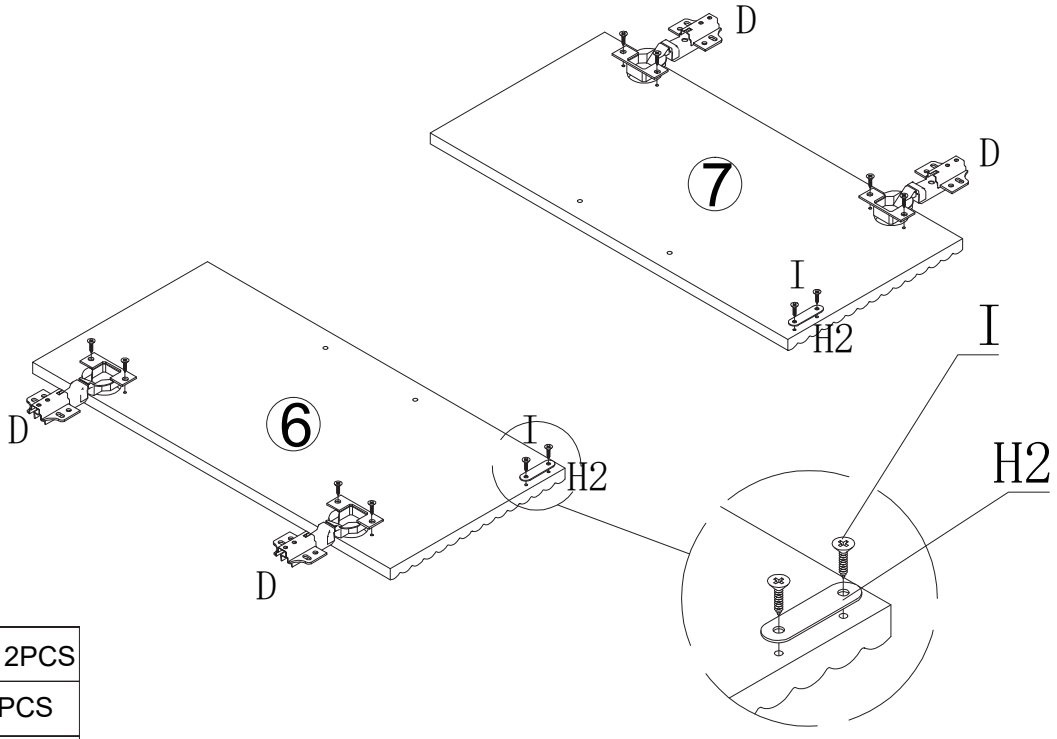

	H2 x 2PCS
	I x 4PCS
	D x 2PCS

Installation steps

STEP 17

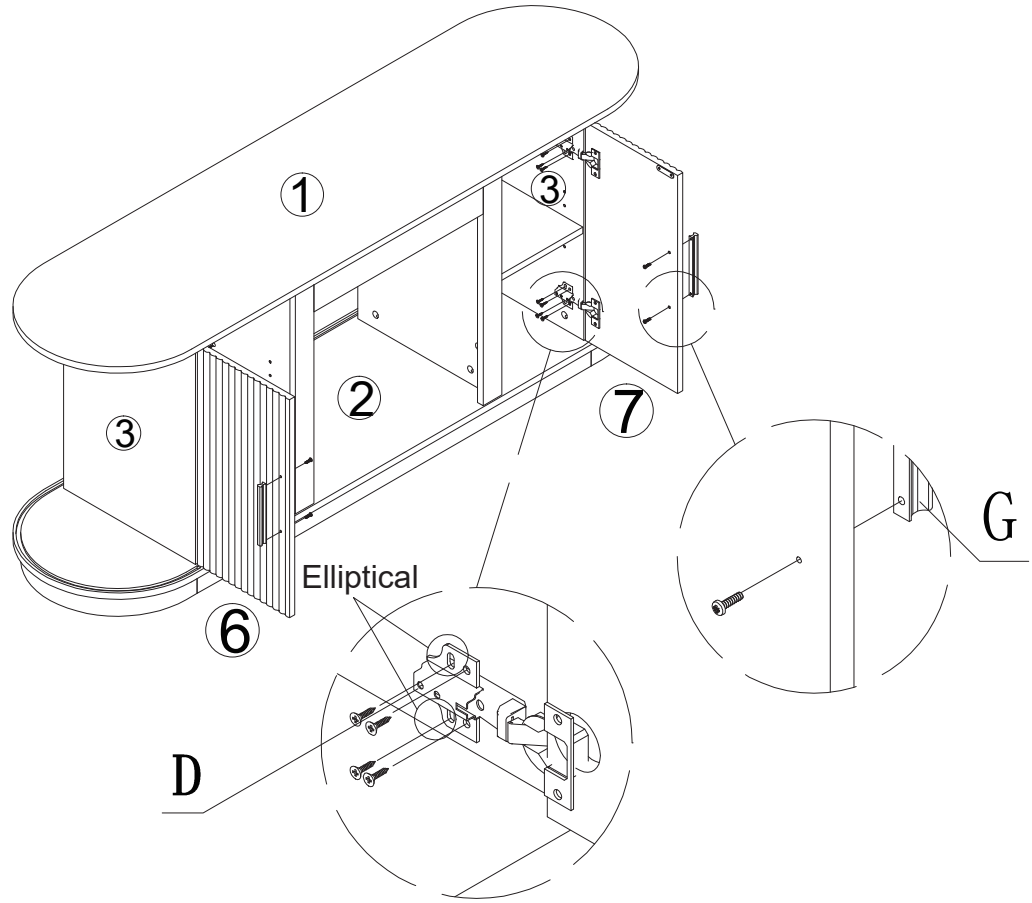

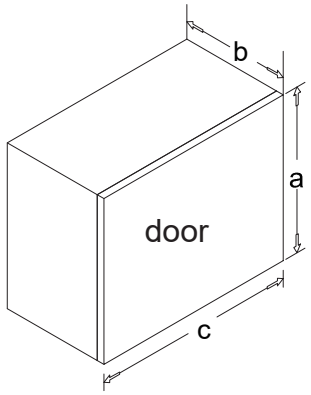

Mounting Part 6 to Part 3:
1.First, install the 4 oval-hole screws (D) into the small holes (No.8).
2.Close Part 6 and check its position.
3.If misaligned, adjust up/down/left/right by loosening the D screws.
4.Once aligned, secure the 4 round-hole screws (D) to lock in place.
Repeat for Part 7 on Part 4:
Follow the same method to install Part 7 onto Part 4.

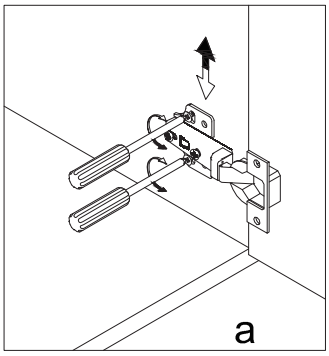

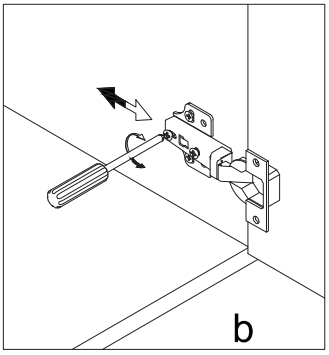

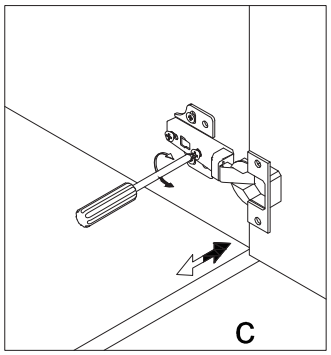

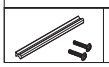	G x 2PCS		D x 2PCS

Installation steps

STEP 18

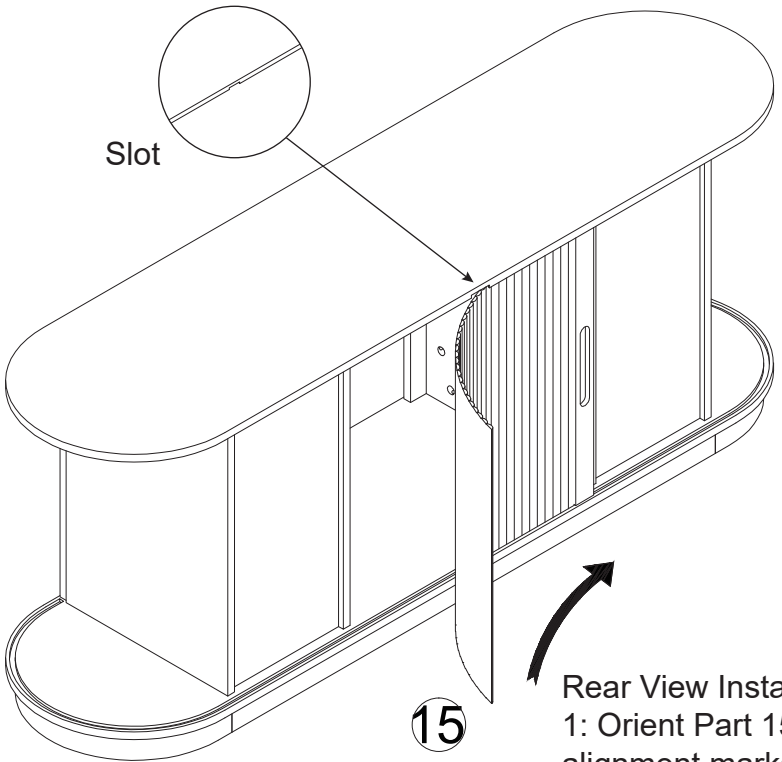

Rear View Installation Guide
1: Orient Part 15 to match dual slot alignment marks.
2: Apply even pressure along the axis until.

STEP 19

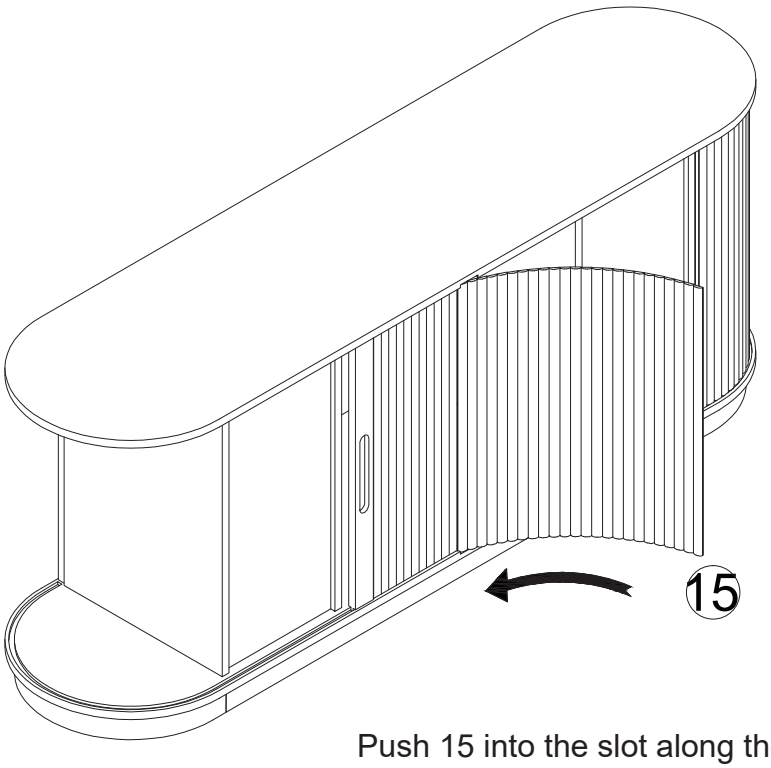

Push 15 into the slot along the gaps of 1 and 2.

Installation steps

STEP 20

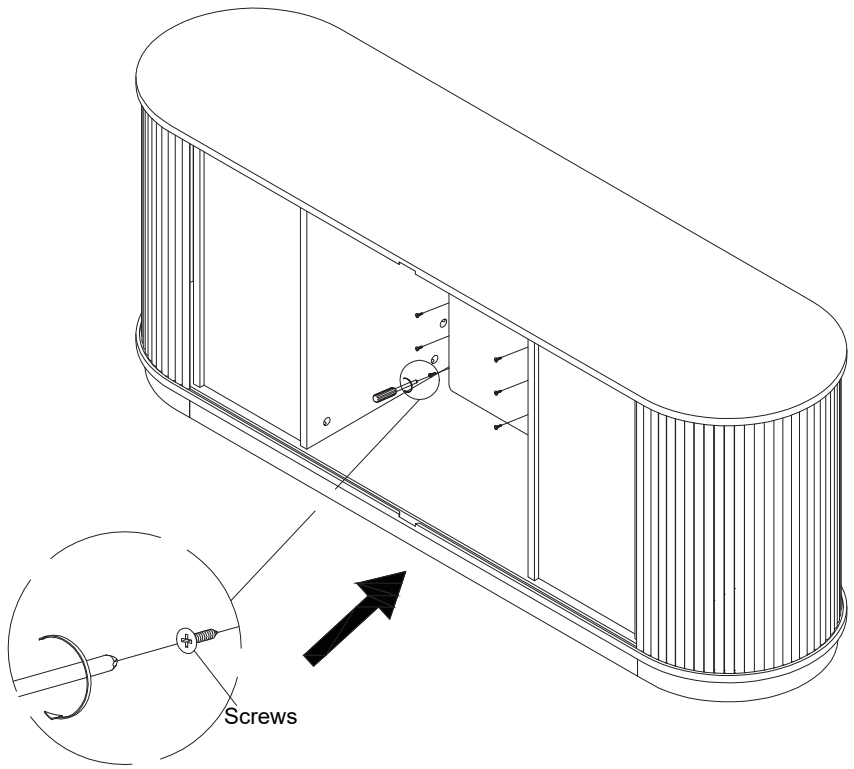

Push the fireplace into TV stand from rear.
To enhance the impact resistance of the wooden panel, pre-drilled holes were not provided. Please determine the drilling positions yourself and install the fireplace accordingly. The panel material is easy to drill.

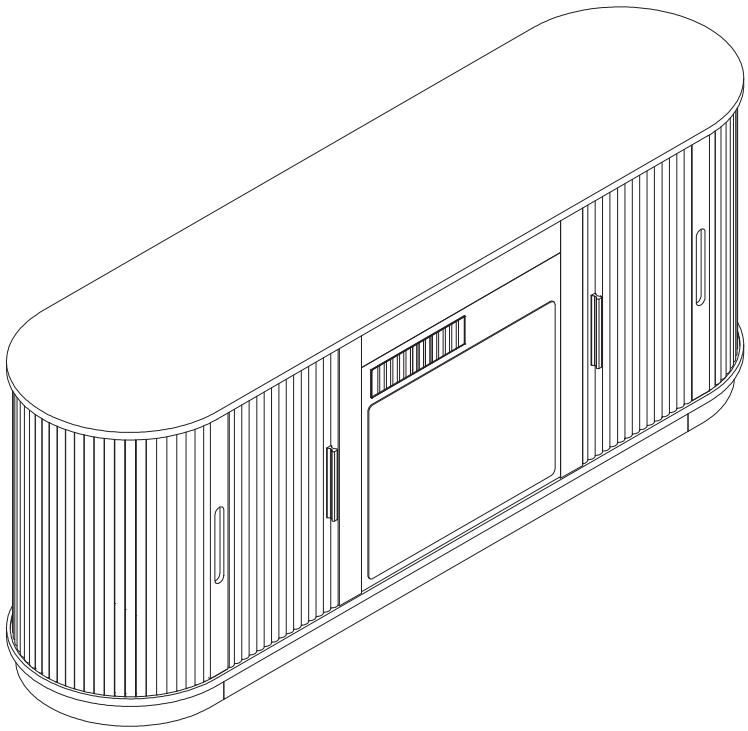

Installation steps

STEP 21

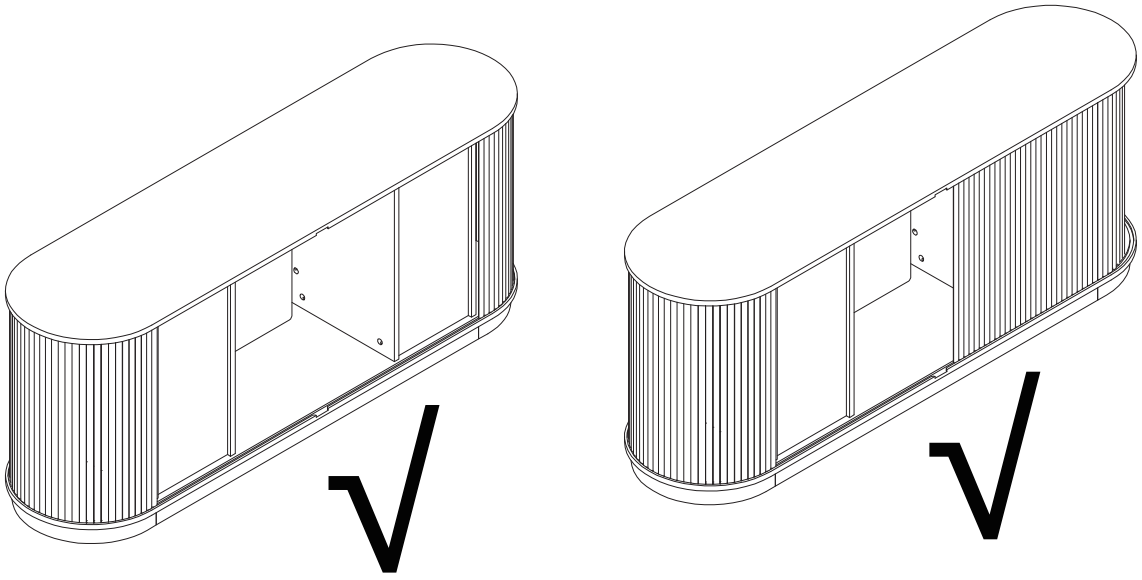

Safety Notice for Fireplace Operation:

During fireplace use, maintain sufficient clearance behind the cabinet for proper ventilation and heat dissipation.

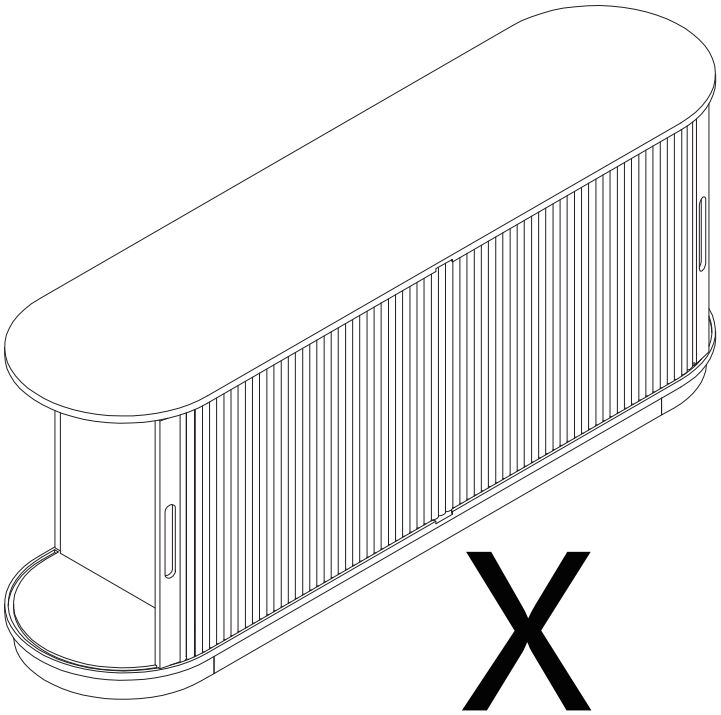

HELP CENTER

WE STAND BEHIND THE QUALITY OF OUR PRODUCT

1. If you have any other issues with your item(s), please feel free to contact us! We will always do our best to come up with a solution that you will be happy with.
2. Please get in touch with our customer service team before returning the item(s).
3. Please do not throw away the original box(es) if you have not finished assembling and confirmed no quality issues.

RETURN POLICY

Length of return period:

You can return the item(s) within 30 days of purchase.
In the meanwhile, everything you purchased from us comes with a one-year warranty.

Who is responsible for the return shipping fee:

We will cover the return shipping fees if:
1. Your item has a manufacturing defect in materials or workmanship. For example, material cracking or screw hole misalignment. We will send you a prepaid shipping label after you send us photos or videos of the defects.
2. Your item has been damaged in transit. For example, metal part is broken or product is damaged. We will send you a prepaid shipping label after you send us photos of the damage.
3. You receive the wrong box(es) due to a warehouse error, We will send you a prepaid shipping label after you send us photos of the item(s), ship ping label(s) and words(SKU) on the outer box(es).

* However, we still hope to work with you for a better solution instead of a return. Please don't hesitate to contact our customer service team.

Customer will cover the return shipping fees if:
1. You don't like the item(s) after receiving the box(es).
2. You no longer need the item(s) but have received the box(es).
3. You buy the item(s) by mistake but have received the box(es).
4. Order/shipment cancellation failed, and you have received the box(es).

Return Request

In order to get a full refund as described in this return policy, all items must be:
1. In a brand new/unused condition. Please provide photos before and after packaging.
2. All accessories and parts must be firmly packed in all original packaging before returning. If your return does not meet these requirements, you may not receive a full refund.

When can I receive a refund?

After you return it using the prepaid shipping label we provided and inform us, the refund will be issued once the package(s) have been returned to our warehouse.

What can I do if the product is damaged after warranty?

We want you to be a happy customer. Please reach out to us via email or text, and we will work on a solution to ensure your satisfaction.

Question about your product? Please do not hesitate to email or text us. We will reply to you within 24-48 hours.

+1(503) 928-7812
hellovitesse@gmail.com
Instagram: vitessegaming
YouTube : vitessegaming

SAVE THESE INSTRUCTIONS