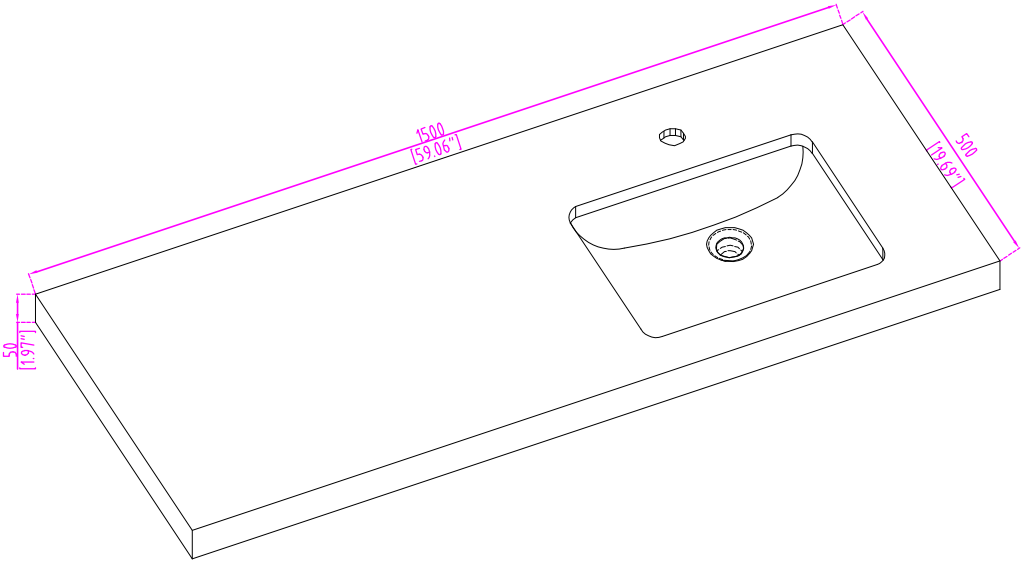
1500
[59.06"]
500
[19.69"]
50
[1.97"]

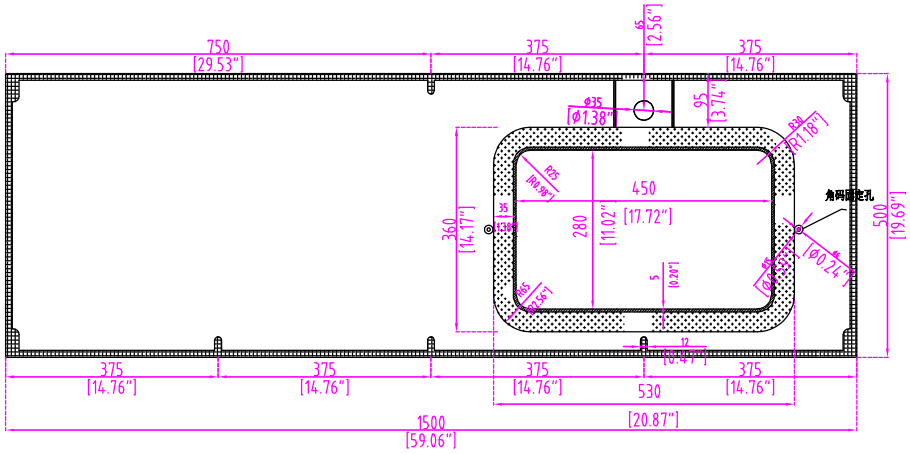
750
[29.53"]
375
[14.76"]
375
[14.76"]
65
[2.56"]
Ø35
Ø1.38"
95
[3.74"]
R30
R1.18"
R25
[0.98"]
450
[17.72"]
角网眼连孔
360
[14.17"]
35
[1.38"]
280
[11.02"]
500
[19.69"]
Ø0.24"
5
[0.20"]
R15
[0.59"]
12
[0.47"]
375
[14.76"]
375
[14.76"]
375
[14.76"]
375
[14.76"]
530
[20.87"]
1500
[59.06"]

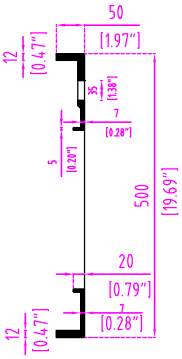
50
[1.97"]
12
[0.47"]
35
[1.38"]
7
[0.28"]
5
[0.20"]
500
[19.69"]
20
[0.79"]
7
[0.28"]
12
[0.47"]

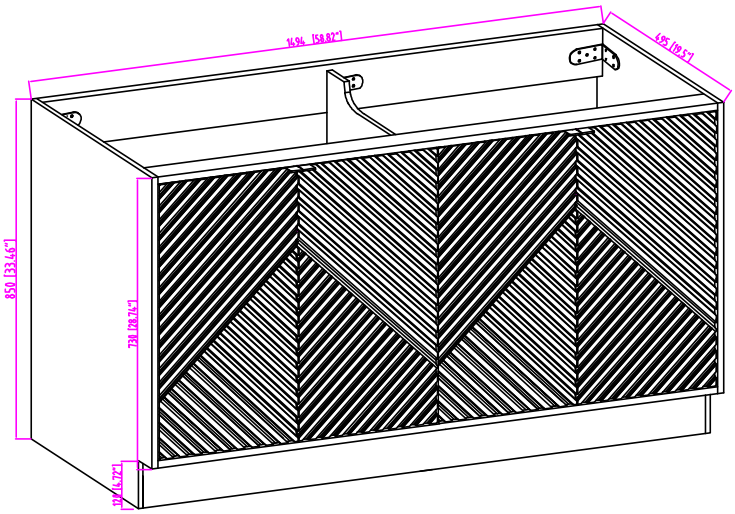
1494 [58.82"]
495 [19.5"]
850 [33.46"]
738 [29.06"]
120 [4.72"]

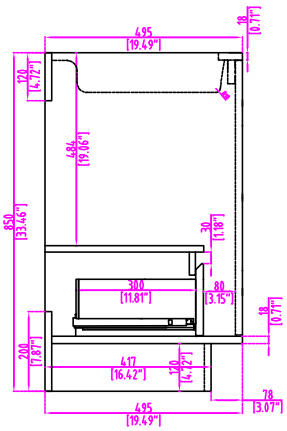
495
[19.49"]
18
[0.71"]
120
[4.72"]
484
[19.06"]
850
[33.46"]
30
[1.18"]
300
[11.81"]
80
[3.15"]
18
[0.71"]
200
[7.87"]
417
[16.42"]
120
[4.72"]
78
[3.07"]
495
[19.49"]

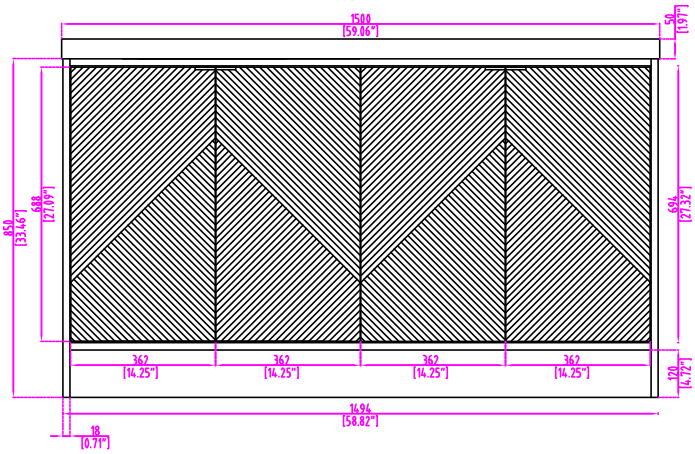
1500
[59.06"]
50
[1.97"]
850
[33.46"]
688
[27.09"]
694
[27.32"]
362
[14.25"]
362
[14.25"]
362
[14.25"]
362
[14.25"]
120
[4.72"]
1494
[58.82"]
18
[0.71"]

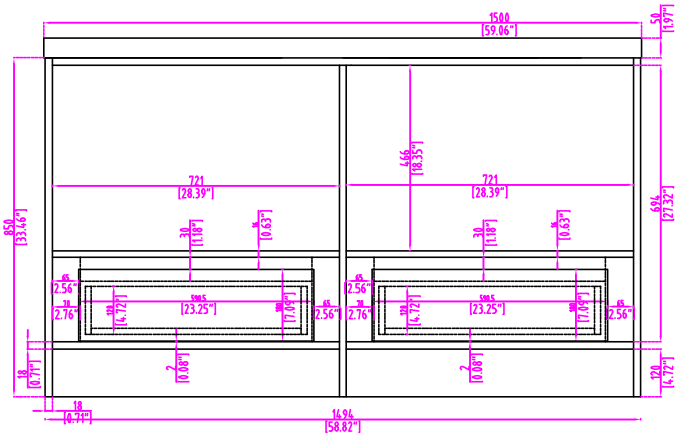
1500
[59.06"]
50
[1.97"]
466
[18.35"]
721
[28.39"]
721
[28.39"]
850
[33.46"]
694
[27.32"]
30
[1.18"]
16
[0.63"]
30
[1.18"]
16
[0.63"]
65
[2.56"]
70
[2.76"]
89
[4.72"]
594.5
[23.25"]
180
[7.09"]
65
[2.56"]
65
[2.56"]
70
[2.76"]
89
[4.72"]
594.5
[23.25"]
180
[7.09"]
65
[2.56"]
2
[0.08"]
2
[0.08"]
18
[0.71"]
120
[4.72"]
18
[0.71"]
1494
[58.82"]

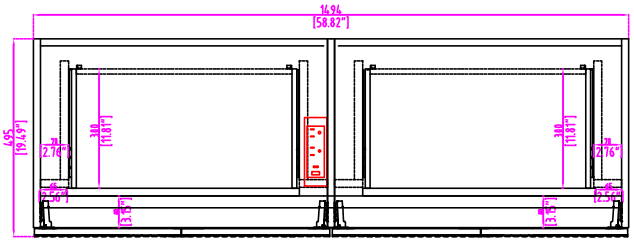
1494
[58.82"]
495
[19.49"]
70
[2.76"]
300
[11.81"]
65
[2.56"]
80
[3.15"]
300
[11.81"]
70
[2.76"]
65
[2.56"]
80
[3.15"]