TEAR SHEET



Lazlo 14" Cordless Accent Lamp

Item # CHA 8040AB-SP-CL

Designer: Chapman & Myers

Height: 14"
Width: 8.5"
Base: 5.25" Tripod
Finishes: AB, G, PWT
Shade Treatments: SP
Shade Details: 4" x 8.5" x 5.5"
Lightsource: Rechargeable LED w/ Touch Dimmer
Wattage: 1.7w (60 - 250lm)
Weight: 3 Pounds
Note: Rechargeable LED Lightsource and Charging Cable Included

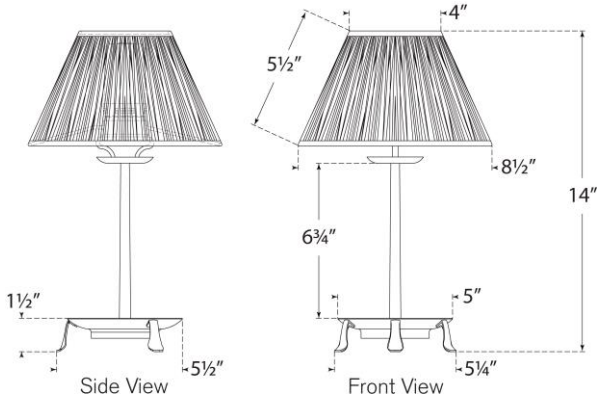

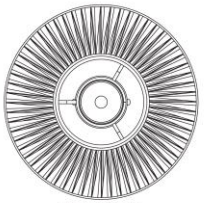

VISUAL COMFORT & CO.

DAMP LED