ASSEMBLY INSTRUCTIONS

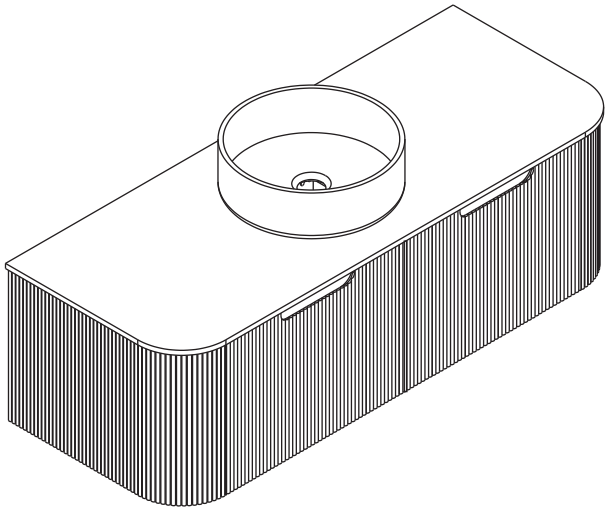

Bathroom Vanity

Notice:

1.Follow the installation instructions. Please confrm all accessories are preset before installation.

2. Do not fully tighten the screws during initial assembly. Fully tighten screws only once all pieces which are correctly assembled.

3. If you encounter any problems during installation, please contact our customer service.

4. Please unbox the item from the side with an open-label and put a carpet on the foor to avoid scratching it.



Recommended installers : 2



Put a carpet on the floor before unpacking



Estimate installation time: 30 minutes

Item no.	Reference Image	Qty
A	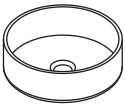	x1
B	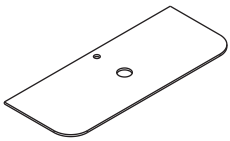	x1
C	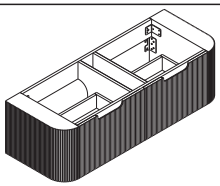	x1
1	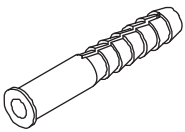	x4

Item no.	Reference Image	Qty
2		x4
3	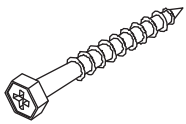	x4
4		x6

1

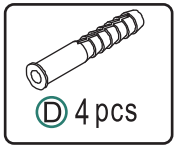

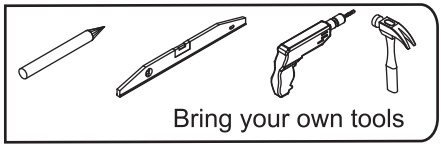

Solid color cabinet hanging hole size

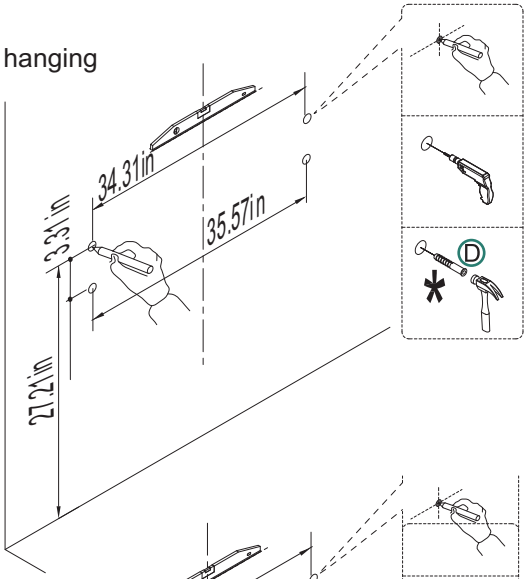

Wood grain cabinet hanging wall hole size

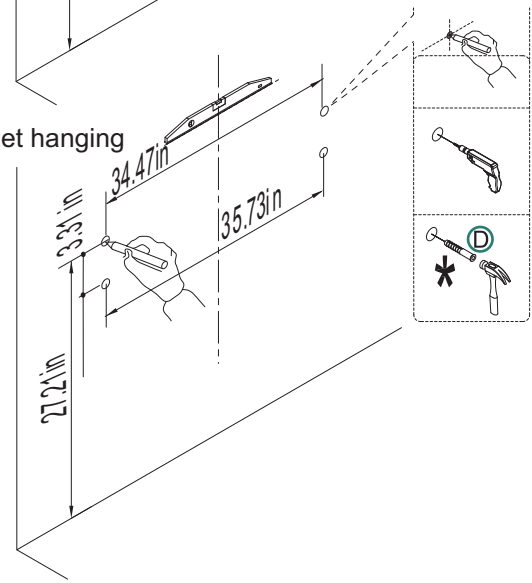

WARNING: To prevent tipping over, this product must beused with the included wall mounting device.
WARNING: Evaluate the suitability of the wall to ensure thatthe fixtures can withstand the forces that occur.

2

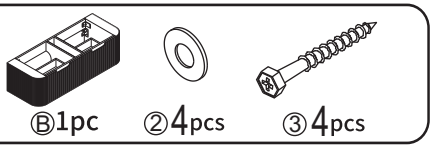

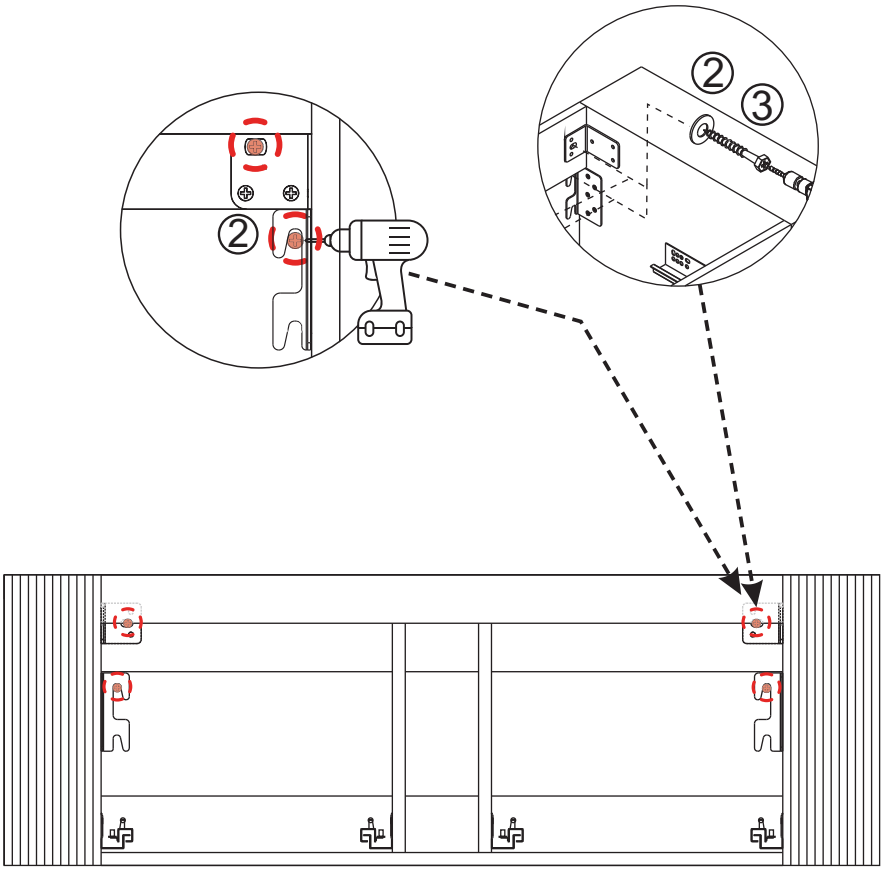

3

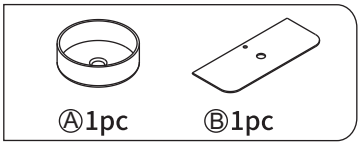

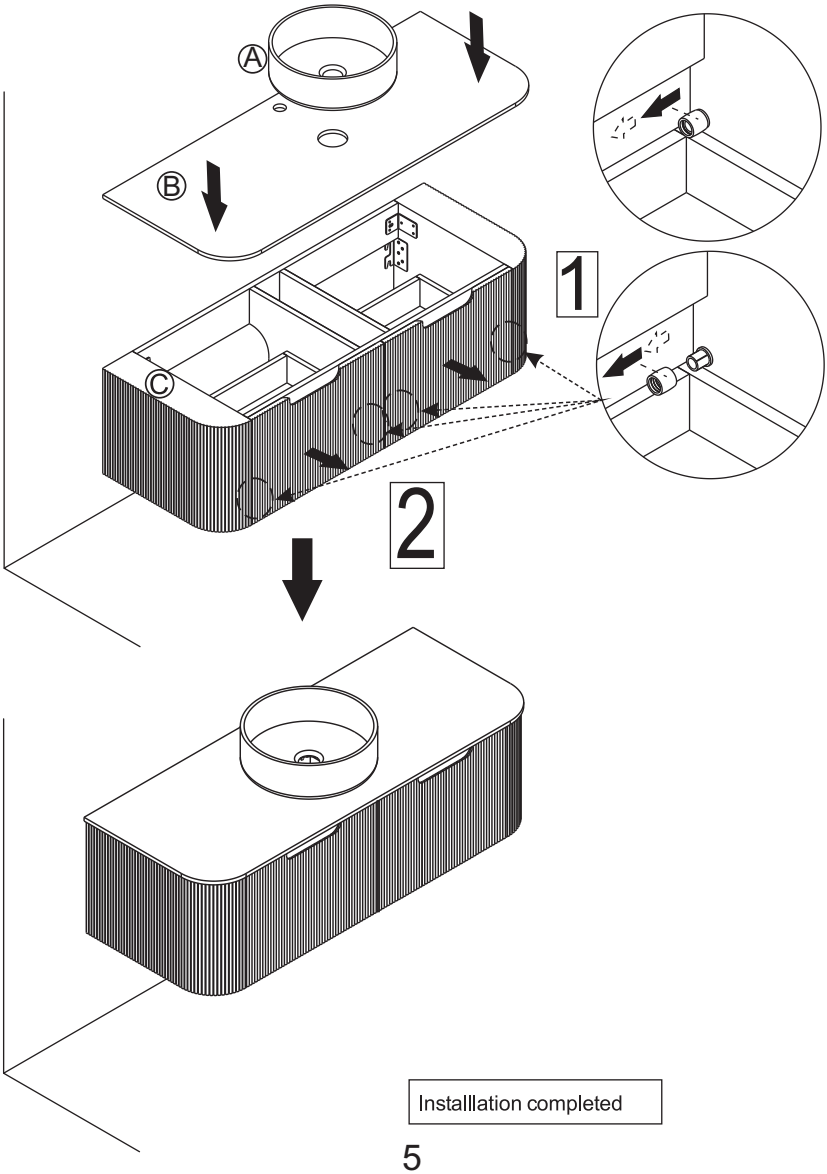

Installlation completed

4

Installation of drain assembly

Turn the screw at the bottom of the guide rail counterclockwise!

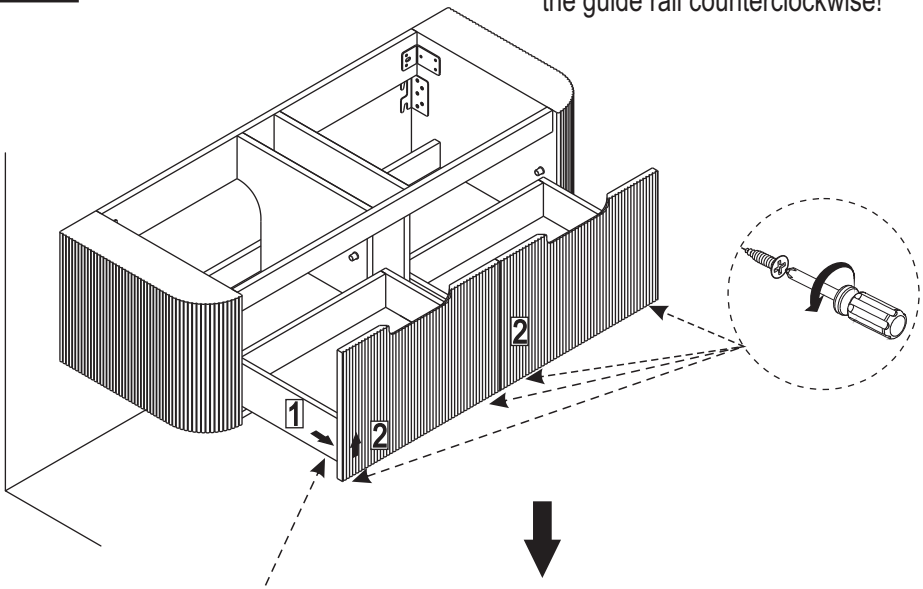

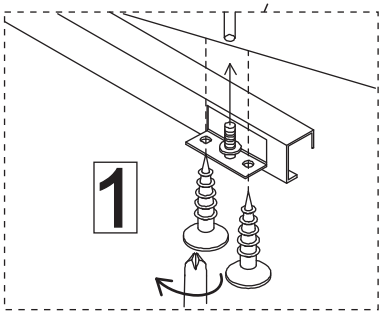

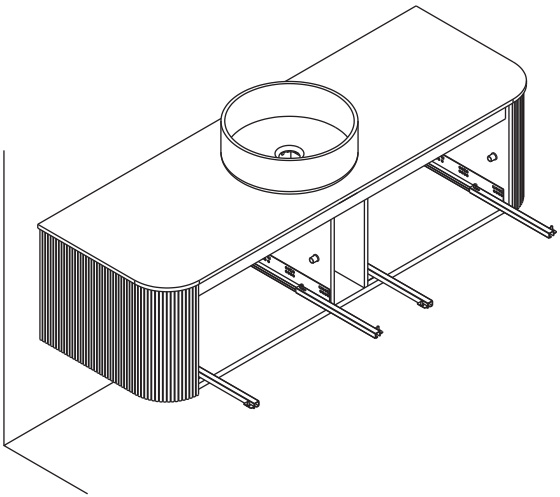

Move out the drawer

5



④6pcs

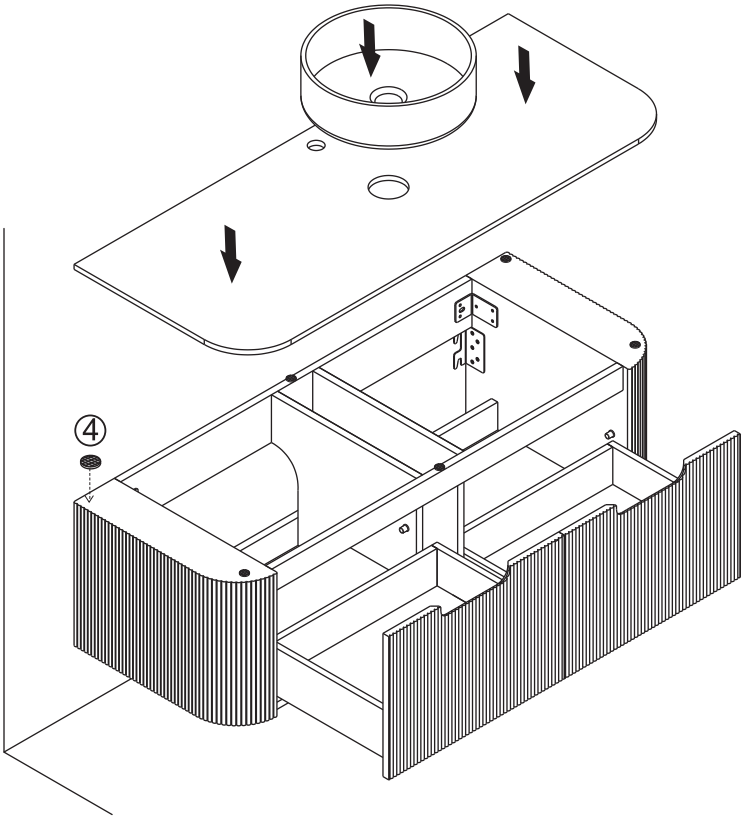

Installation of drain assembly

6

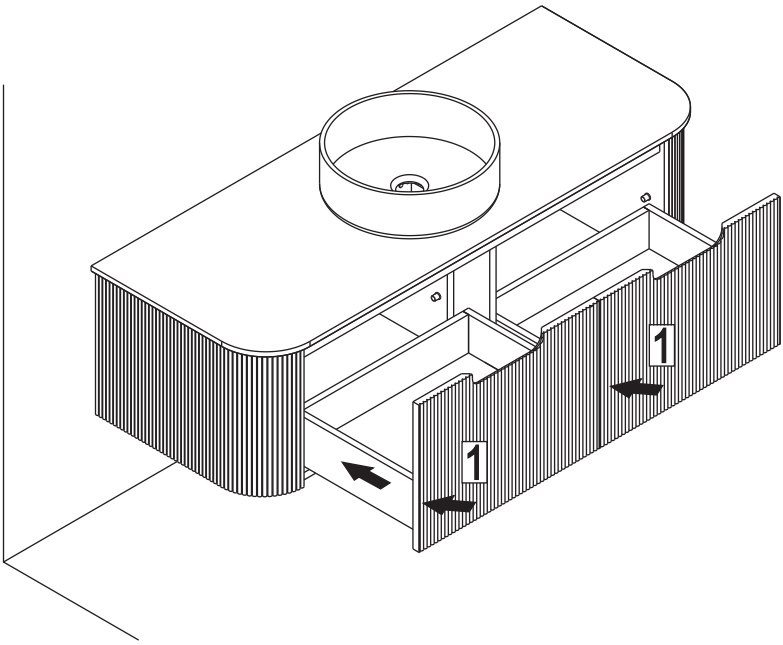

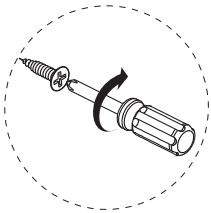

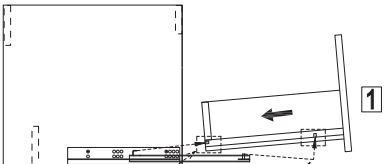

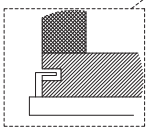

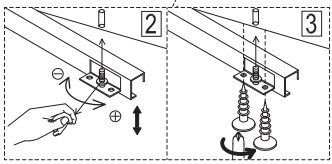

Installlation completed