RECLINER
ASSEMBLY INSTRUCTIONS

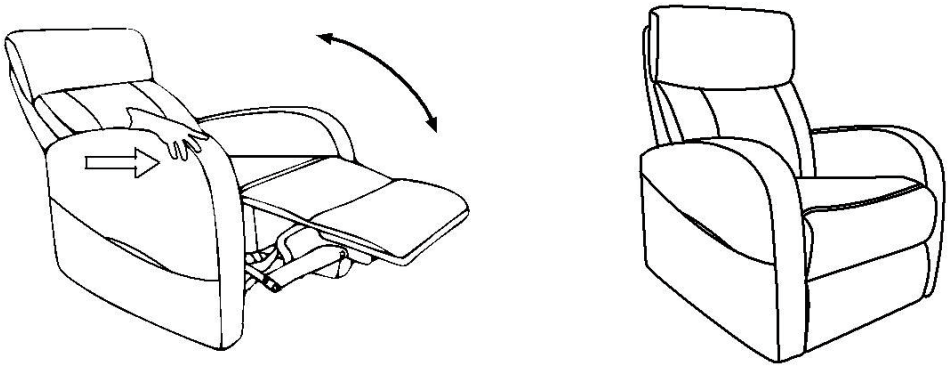

QUESTIONS? CONTACT US:
support@vipclub.app

Do you have any questions about the recliner sofa? Do you have any comments or ideas you would like to share with us? Please feel free to send us a message. We love to hear from our customers and get their opinions! We are always looking for great new ideas to add to our products. So if you have any suggestions you would like to share, let us know!

If in any case, you are not 100% happy with the item received, would you please contact us first and give us a chance to make it right for you? All of our products are covered by warranty and we will do our best to address any of your concerns. We are dedicated to your 100% satisfaction with your order.

PART LIST

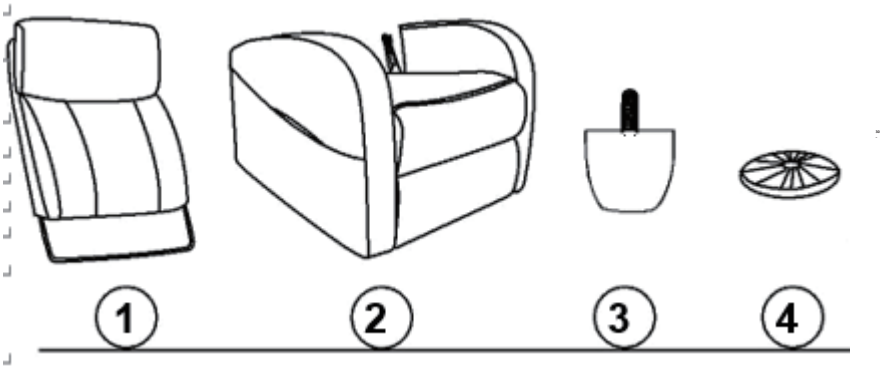

WARNING

This sofa is designed for one person weighing up to 275lbs(125kgs).
Avoid exposing furniture directly to sunlight or heating and air conditioning outlets. Do not place your upholstery furniture too close to windows, radiators, or vents, and be sure to use window treatments to block the sun’s rays.
Do not use rough cleaning tool or corrosive detergent to clean the sofa.
Some of the parts are heavy and/or has shape edge, please install it carefully to avoid hurt you and people around you.

- If any parts are missing, broken, damage or worn, stop using the sofa until repairs are made and factory replacement parts are install.

If there is any question regarding the installation, please do not hesitate to contact us through support@vipclub.app for detailed installation video.

STEP 1:

MATCH BOTH SIE HOOK-LOOP BRACKET ON BACKREST(1) AND MAIN FRAME (2), PUSH DOWN BACKREST (1) TO ASSEMBLY.

STEP 2:

ASSEMBLE FOUR PLASTIC LEGS(3) AND WASHERS (4) TO THE BOTTOM OF MAIN FRAME (2).

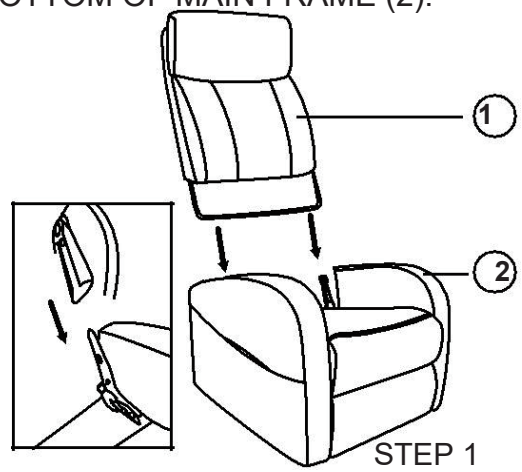

STEP 1

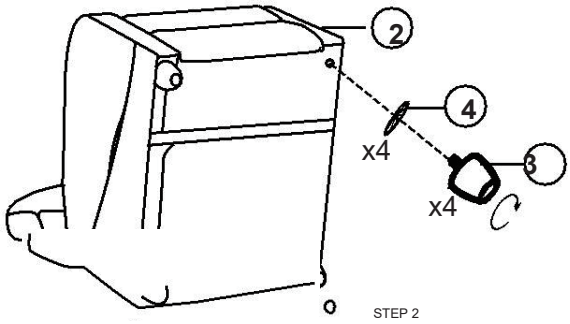

STEP 2

STEP 3:

IF YOU WANT TO LEAN BACK, USE YOUR BODY WEIGHT AND ARMS TO PUSH THE BACKREST DOWN.

STEP 4:

CLOSE THE FOOTREST WITH LEGS THEN YOU CAN STAND UP.

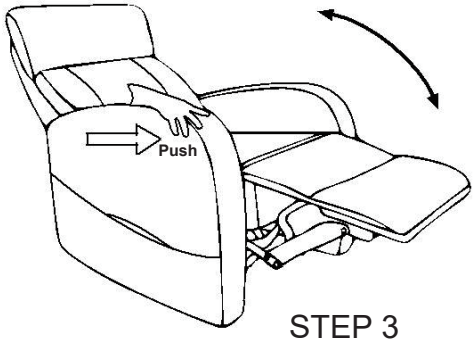

STEP 3

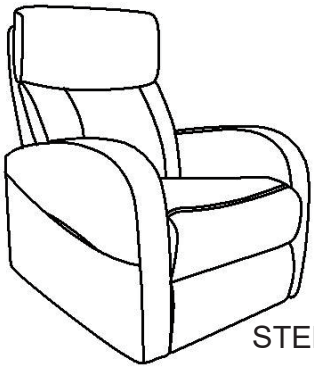

STEP 4

MAINTENANCE INSTRUCTIONS

TO STORE:

Place unit in its box or safe, dry, cool place. Avoid contact with sharp edges or pointed objects which might cut or puncture the fabric. Do not wrap power cord around the unit. Do not hang the unit by power cord.

TO CLEAN:

- Insure the unit is unplugged from the power source, and allow to cool before cleaning.
- Do not place in any liquid to clean. Clean fabric cover by wiping with a damp sponge, using a mild detergent or suds. Pat dry with clean, dry cloth.
- Do not use abrasive cleaners, brushes, gasoline, kerosene, glass/furniture polish, paint thinner or water hotter than 120*to clean the unit.
- Do not use any strong chemical cleaners.

.....**END**.....