Instructions for Use

Up and down adjustment

Revolve adjustment

Thanks for purchasing our products. Please read this manual before assembly. And please assemble in order. After the assembly, keep the instruction properly. Make sure all the parts are concluded (9 kinds in total).

Accessories List

(1) Backrest 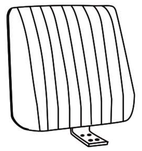	(2) Seat Cushion	(3) Base Plate 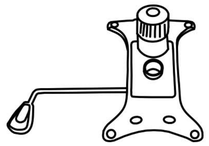	(4) Base Tube 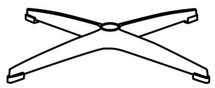
(5) Air Rod 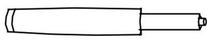	(6) Decorative Circle	(7) 4 Screws (M6×20mm) 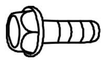	(8) 4 Screws (M6×35mm) 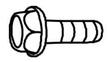
(9) Hexagon Wrench			

Notice

- This is a single chair, so please do not seat 2 or more persons, just seat only one person.
- Do not stand on the chair.
- Do not sit reverse or sit outside of the seat cushion.
- Check the screws once every 6 months, to make sure the screws are tight. Do not use the chair when the screws are loose.
- Please assemble according to the instructions.

Assembly Instruction

Please assemble in a wide and flat place.

Step 1

Fix Base Plate (3) to the bottom of Seat Cushion (2). Tighten the Screws M6×20mm (7) with Hexagon Wrench (9) firmly.

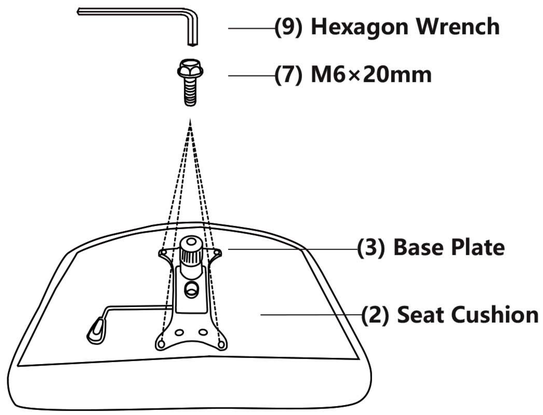

Step 2

Fix the bottom of Backrest (1) to the back of Seat Cushion (2). Tighten the Screws M6X35mm (8) with Hexagon Wrench (15) firmly.

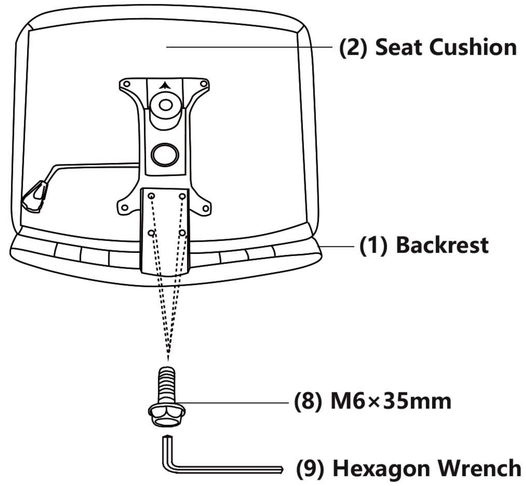

Step 3

Pick up the Air Rod (5) and Base Tube (4). Insert the Air Rod (5) and Decorative Circle (6) into Base Plate (3). There's a hole in the middle of Base Tube (4). Press the Seat Cushion (2) from top to bottom, use your whole body's strength to insert it firmly.

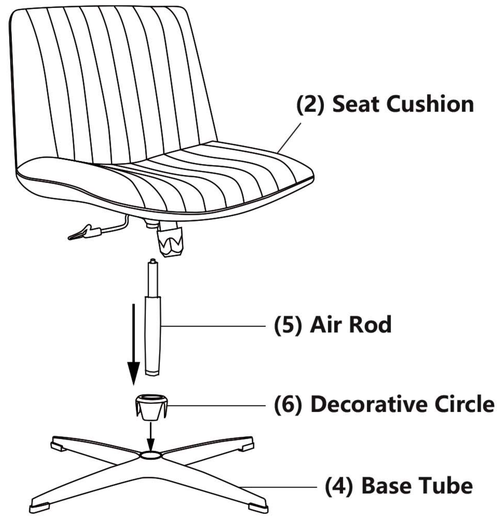

Finish