5 Pieces Chairs and Round Table Set
Assembly Instruction

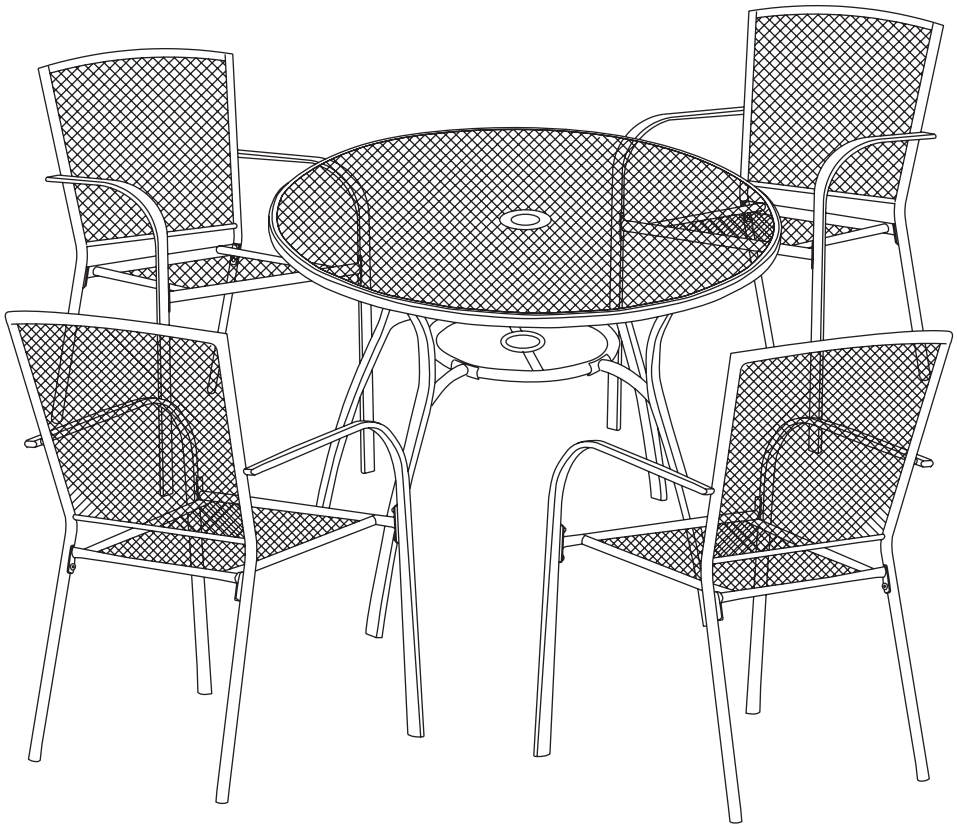

Attention

1. We highly value customer’s user experience. Please contact us freely if there's any parts missing or damaged. We will provide professional advice or efficient customer support in 24 hours.

2.Item will come with 2 boxes, box A(1/2) and box B(2/2). In box A, you will receive 4 chairs(hardware not included). In box B, you will receive 1 round table and all hardware for table and chairs. We suggest you install the whole item after receiving both boxes.

3. We recommend tighten all the bolts after you put all the bolts into the holes.

PART-I Install the Table

Carton A=Ⓐ Carton B=Ⓑ

Parts List			
A Ⓑ 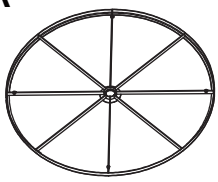 1PC	B Ⓑ 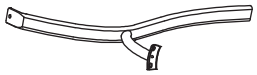 4PCS	C Ⓑ 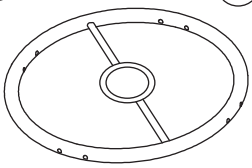 1PC	D Ⓑ  M6 End Cap 12PCS
E Ⓑ  8PCS	F Ⓑ  M6x12 4PCS	G Ⓑ 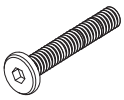 M6x30 8PCS	H Ⓑ  Washer 20PCS
I Ⓑ  4PCS	J Ⓑ  8PCS	K Ⓑ  1PC	L ◯  Allen Key 1PC

⚠ Note: Please do not fix bolts tightly before all the screws are aligned. Tighten all screws at last.

STEP 1

Connect 4 legs(B) to table frame(C) with flat washer(H), long bolt(G), cap(D), nut(J) and cap(E).

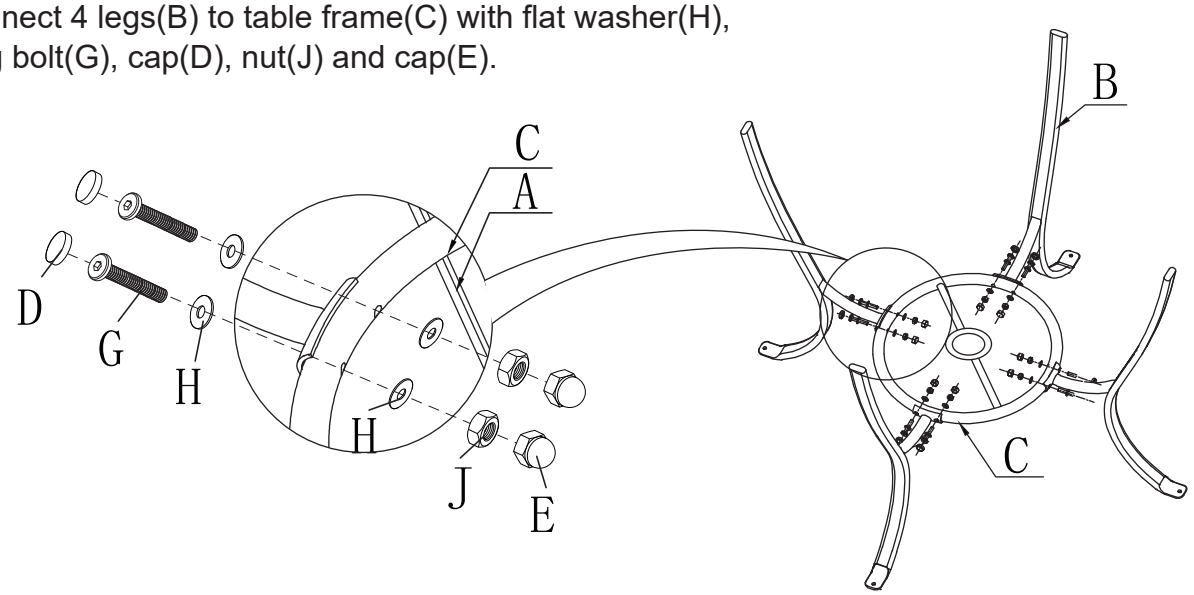

STEP 2

Connect table top(A) to 4 legs(B) with washers(H&I), short bolt(F) and cap(D).

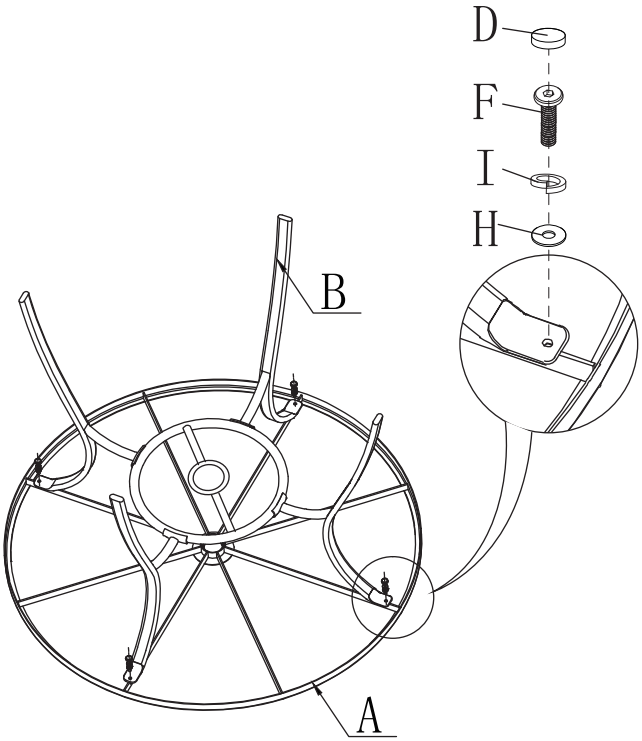

FINISH THE ASSEMBLY



PART-II Install the Chairs

Carton A=Ⓐ Carton B=Ⓑ

Parts List			
A1 Ⓐ 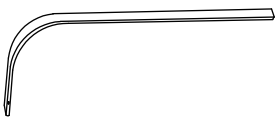 4PCS	B1 Ⓐ  4PCS	C1 Ⓐ 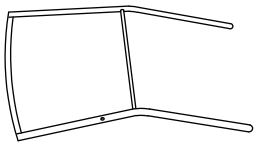 4PCS	D1 Ⓐ 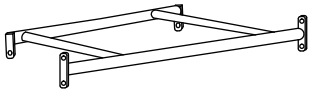 4PCS
E1 Ⓑ 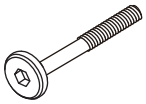 M6x50 8PCS	F1 Ⓑ 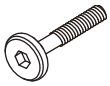 M6x15 24PCS	G1 Ⓑ  M6 Washer 32PCS	H1 Ⓑ  M6 End Cap 32PCS	I1 Ⓑ  Allen Key 4PCS

⚠ Note: Please do not fix bolts tightly before all the screws are aligned. Tighten all screws at last.

STEP 1

Connect right armrest (A1) and left armrest (B1) to backrest (C1) with flat washer (G1), long bolt (E1) and cap (H1). Please do not tighten them now.

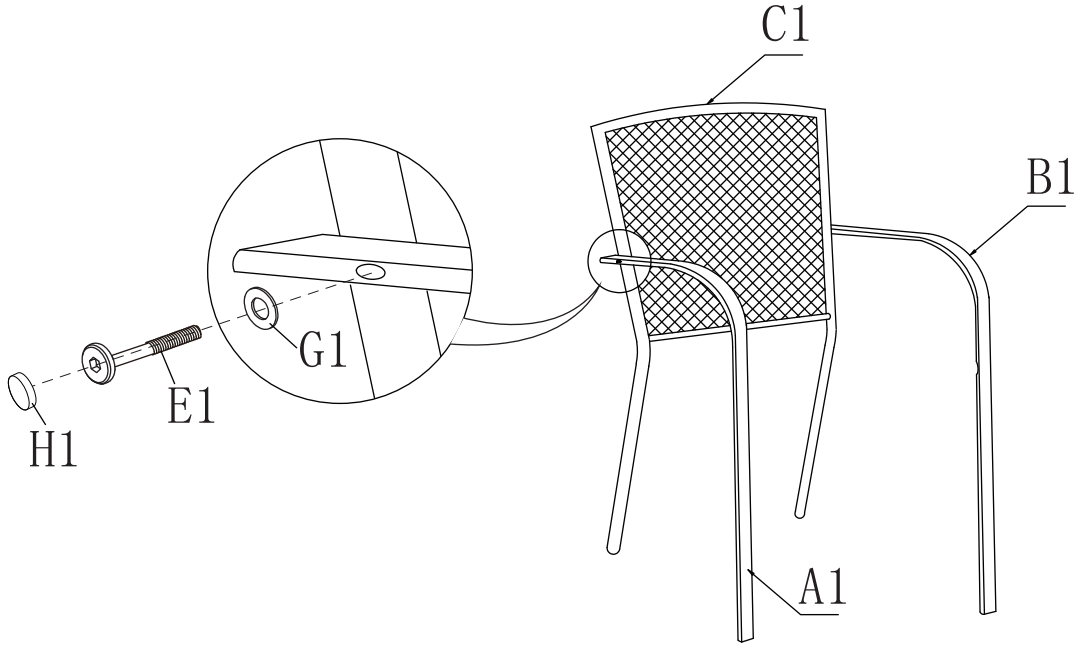

STEP 2

Connect seat (D1) to backrest (C1) with flat washer (G1), short bolt (F1) and cap (H1).
Then connect seat (D1) to armrests (A1&B1) with flat washer (G1), short bolt (F1) and cap (H1).
Please tighten all the bolts after you put all the screws into the holes.

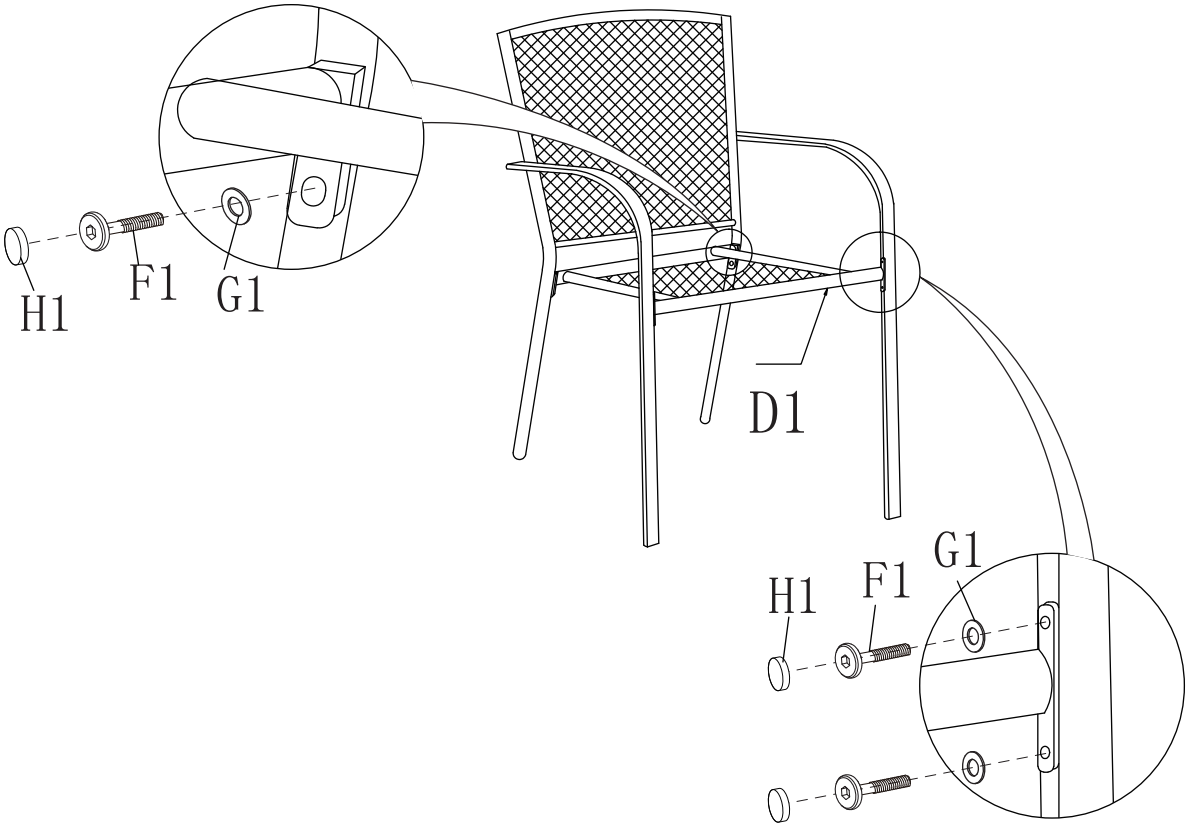

FINISH THE ASSEMBLY

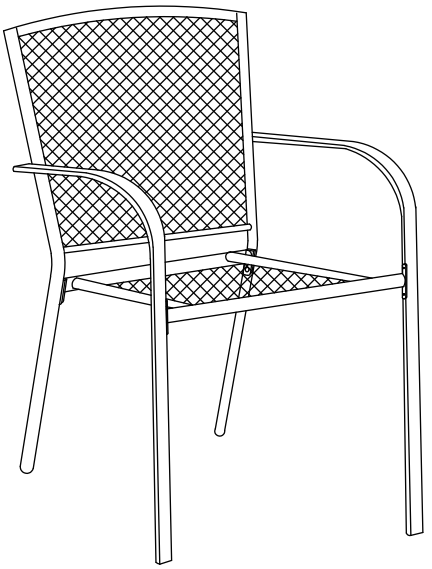

x4