NOTES:

1. TO INSPECT ASSEMBLY, FOLLOW FIRST ARTICLE AND IN PROCESS INSPECTION SHEET.
2. PUT THESE ITEMS IN SEPARATE PLASTIC BAGS.
3. TORQUE TO 8 +/-0.5 LB-FT.
4. APPLY THIN COAT OF SILICON GREASE FOR ALL O-RINGS BEFORE INSTALLATION.
5. APPLY LOCTITE 242, IF SCREW DOES NOT HAVE NYLON PATCH.
6. APPLY LOCTITE 680.
7. PULL OUT HOSE AND APPLY SILICON GREASE, BETWEEN HOSE AND SPOUT, 10" FROM OUTLET OF HOSE.
8. TORQUE SWIVEL NUT TO 19 +/-2 LB-IN.
9. TORQUE TO 10 +/-2 LB-FT.
10. TORQUE TO 7 +/- 2 LB-IN.
11. PARTIALLY THREAD MOUNTING KIT ONTO SHANK
12. DO NOT DOCK SPRAY HEAD TO SPOUT WHEN PACKAGING.
13. APPLY LOCTITE 242.

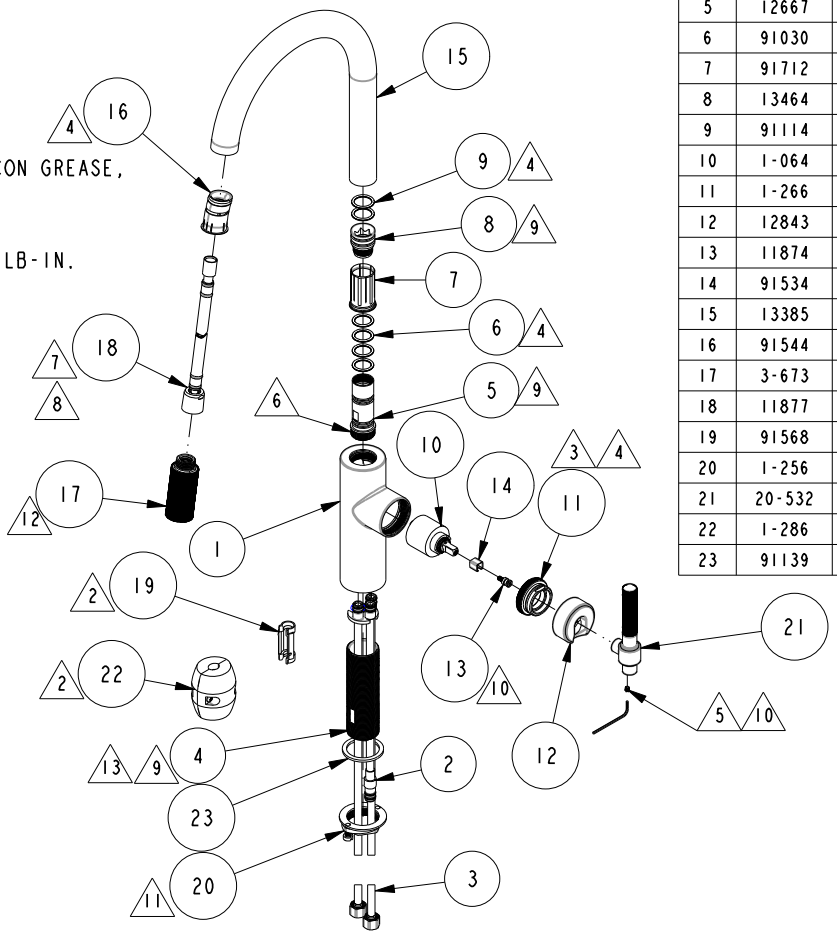

BILL OF MATERIAL (CURRENT LEVEL)

ITEM	PT/ASSY	DESCRIPTION	TYPE	QTY.
1	13434	BODY, TAFT PULL-DOWN	PART	1
2	1-458	OUTLET HOSE	ASSEMBLY	1
3	1-457	INTEGRATED SUPPLY HOSE	ASSEMBLY	1
4	13440	SHANK	PART	1
5	12667	SPOUT ADAPTER	PART	1
6	91030	O-RING, #2- 115, EPDM, 65-75 DURO, NSF 61	PART	4
7	91712	SLEEVE	PART	1
8	13464	ADAPTER EXTENSION	PART	1
9	91114	O-RING, #2- 116, EPDM, 65-75 DURO, NSF 61	PART	2
10	1-064	SINGLE LEVER CARTRIDGE	PART	1
11	1-266	CART. RETAINER ASM	ASSEMBLY	1
12	12843	HANDLE HUB	PART	1
13	11874	HANDLE ADAPTER SCREW	PART	1
14	91534	CARTRIDGE STEM INSERT	PART	1
15	13385	PULLDOWN SPOUT - LONG	PART	1
16	91544	MAGNET DOCKING	ASSEMBLY	1
17	3-673	SPRAY HEAD	ASSEMBLY	1
18	11877	HOSE, PULLDOWN SWIVEL	ASSEMBLY	1
19	91568	RETAINER CLIP	PART	1
20	1-256	MOUNTING KIT	ASSEMBLY	1
21	20-532	KNURLED HANDLE ASM	ASSEMBLY	1
22	1-286	WEIGHT ASM	ASSEMBLY	1
23	91139	WASHER RBR 1-3/8	PART	1

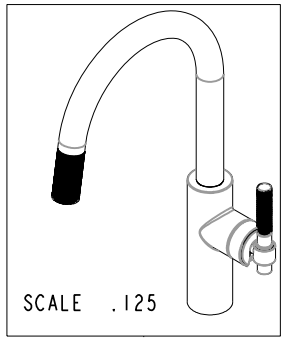

Cesar Gayosso Digitally signed by Cesar Gayosso Date: 2022.01.27 09:43:50 -08'00'

ZONE	REV	DESCRIPTION	DATE	APPROVED
-	G	EN-4446	01/27/22	C.G.
-	F	EN-4185	09/23/21	C.G.
-	E	EN-4300s	03/29/21	R.S.
-	D	EN-4200	07/14/20	C.G.
-	C	EN-4167	06/10/20	JMR
-	B	EN-4071a	02/13/20	J.M.
-	A	EN-4058	01/03/20	J.M.
-	-	EN-3881	07/15/19	J.M.

COPYRIGHT 2005 BRASSTECH, INC. THESE DRAWINGS AND THE DESIGNS DEPICTED HEREIN ARE THE PROPRIETARY PROPERTY OF BRASSTECH. ANY USE OR REPRODUCTION IS SUBJECT TO THE EXPRESS APPROVAL OF BRASSTECH. UNAUTHORIZED USE IS STRICTLY PROHIBITED. ALL RIGHTS RESERVED.

		-	-
TESTING	-	-	-
ASSEMBLY	-	-	-
PLATING	-	-	-
POLISHING	-	NEXT ASSY	USED ON
MACHINING	-	APPLICATION	
TOOLING FIXTURE #		REMOVE ALL BURRS AND SHARP EDGES	

UNITS ARE: INCHES [MM]
TOLERANCES ARE:
FRACTIONS ±1/16" DECIMALS .X ±.1 [2,5] .XX ±.06 [1,5] ANGLES ±1°
(X.XXX) DENOTES CRITICAL DIMS.
ALL THREADS ARE CRITICAL

DRAWN	JINSON	01/27/22
CHECKED	C.G.	01/27/22
APPROVED	C.G.	01/27/22

BRASSTECH INCORPORATED
2001 CARNEGIE AVE.
SANTA ANA, CA 92705
(949) 417-5207

KITCHEN PULL DOWN

DWG NO. 3290-5113 REV G

SCALE .125 REF. SHEET 1 OF 2

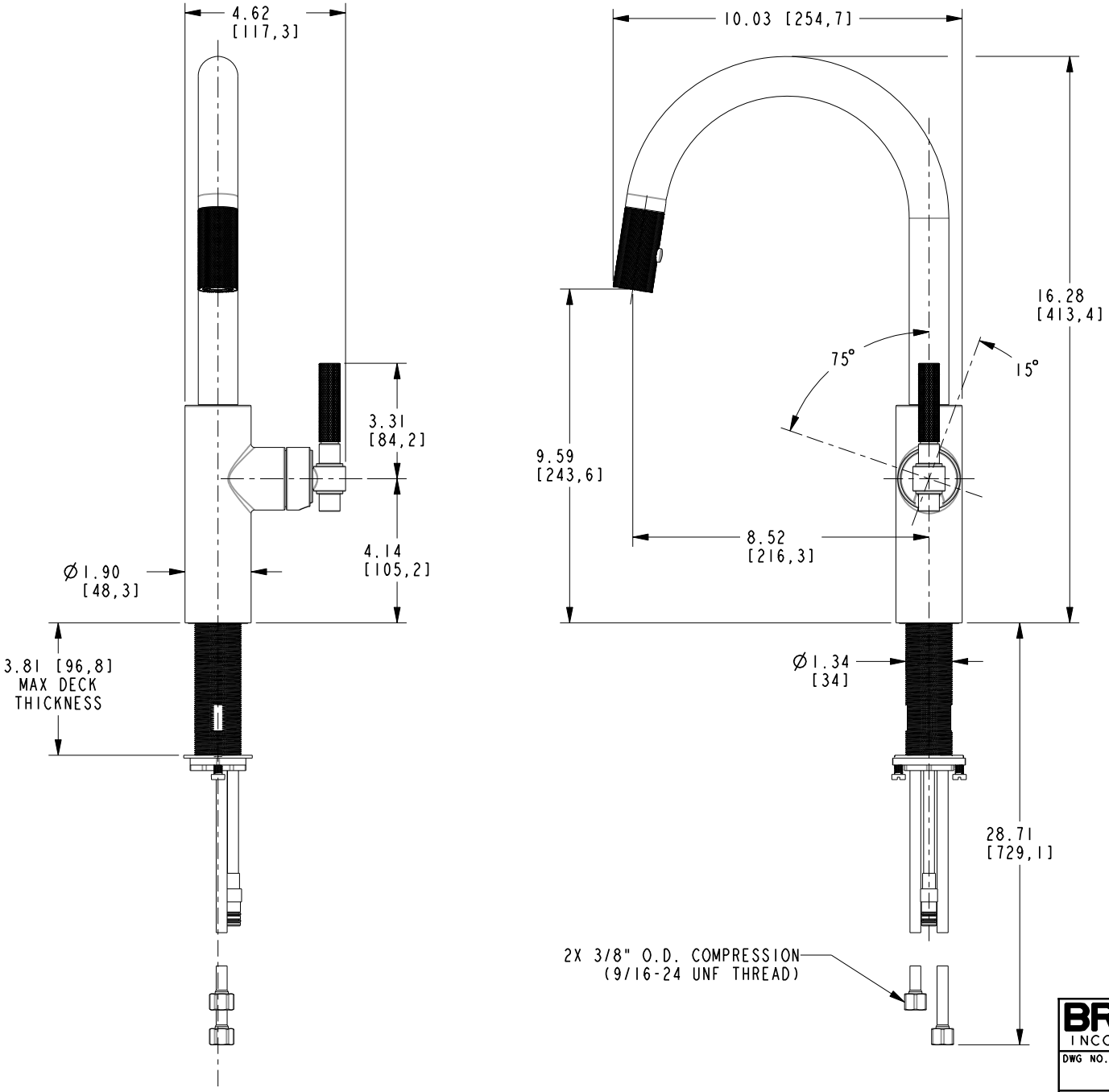

BRASSTECH INCORPORATED

2001 E. CARNEGIE AVE.
SANTA ANA, CA 92705
(949) 417-5207

DWG NO.	REV
3290-5113	G

SCALE	REF.	SHEET
.225	-	2 OF 2