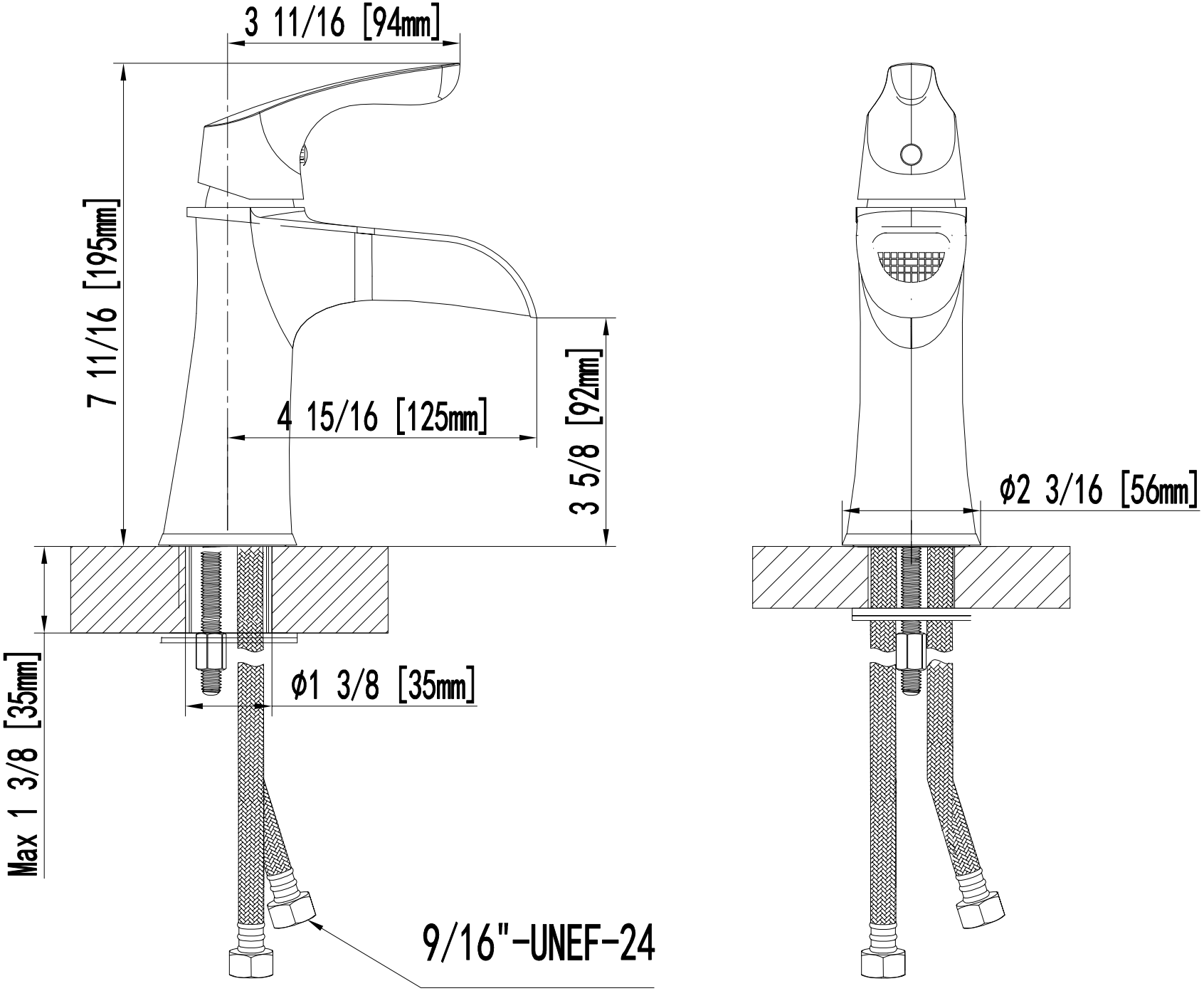
3 11/16 [94mm]
7 11/16 [195mm]
4 15/16 [125mm]
3 5/8 [92mm]
Max 1 3/8 [35mm]
ϕ1 3/8 [35mm]
9/16"-UNEF-24
ϕ2 3/16 [56mm]